TM11-6625-3016-14

TECHNICAL MANUAL

OPERATOR'S, ORGANIZATIONAL, DIRECT SUPPORT, AND GENERAL SUPPORT MAINTENANCE MANUAL

TEST SET, RADIO AN/GRM-114 (NSN 6625-01-108-6206)

HEADQUARTERS, DEPARTMENT OF THE ARMY

JUNE 1982

WARNING

Operator and maintenance personnel should be familiar with the requirements of TB-385-4 before attempting installation or operation of the equipment. Failure to follow the requirements of TB-385-4 could result in injury or DEATH.

DON'T TAKE CHANCES!

DANGEROUS RF VOLTAGES, UP TO 2,000 V, MAY EXIST WITHIN THE AN/GRM-114 WHILE THE UNIT IS OPERATING. AVOID RADIO FREQUENCY BURNS.

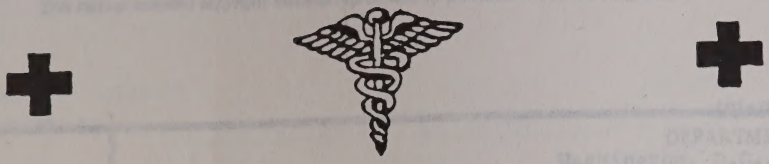

SAFETY STEPS TO FOLLOW IF SOMEONE IS THE VICTIM OF ELECTRICAL SHOCK

1. DO NOT TRY TO PULL OR GRAB THE INDIVIDUAL

2. IF POSSIBLE, TURN OFF THE ELECTRICAL POWER

3. IF YOU CANNOT TURN OFF THE ELECTRICAL POWER, PULL, PUSH, OR LIFT THE PERSON TO SAFETY USING A WOODEN POLE OR A ROPE OR SOME OTHER INSULATING MATERIAL

4. SEND FOR HELP AS SOON AS POSSIBLE

5. AFTER THE INJURED PERSON IS FREE OF CONTACT WITH THE SOURCE OF ELECTRICAL SHOCK, MOVE THE PERSON A SHORT DISTANCE AWAY AND IMMEDIATELY START ARTIFICIAL RESUSCITATION

CAUTION

THIS EQUIPMENT CONTAINS PARTS AND ASSEMBLIES SENSITIVE TO DAMAGE BY ELECTROSTATIC DISCHARGE (ESD). USE ESD PRECAUTIONARY PROCEDURES WHEN TOUCHING, REMOVING OR INSERTING PRINTED CIRCUIT BOARDS.

ESD
CLASS 1

GENERAL HANDLING PROCEDURES FOR ESDS ITEMS

- USE WRIST GROUND STRAPS OR MANUAL GROUNDING PROCEDURES
- KEEP ESDS ITEMS IN PROTECTIVE COVERING WHEN NOT IN USE
- GROUND ALL ELECTRICAL TOOLS AND TEST EQUIPMENT
- PERIODICALLY CHECK CONTINUITY AND RESISTANCE OF GROUNDING SYSTEM
- USE ONLY METALIZED SOLDER SUCKERS
- HANDLE ESDS ITEMS ONLY IN PROTECTED AREAS

MANUAL GROUNDING PROCEDURE

- MAKE CERTAIN EQUIPMENT IS POWERED DOWN
- TOUCH GROUND PRIOR TO REMOVING ESDS ITEMS
- TOUCH PACKAGE OF REPLACEMENTS ESDS ITEM TO GROUND BEFORE OPENING
- TOUCH GROUND PRIOR TO INSERTING REPLACEMENT ESDS ITEMS

ESD PROTECTIVE PACKAGING AND LABELING

- INTIMATE COVERING OF ANTISTATIC MATERIAL WITH AN OUTER WRAP OF EITHER TYPE 1 ALUMINIZED MATERIAL OR CONDUCTIVE PLASTIC FILM - OR - HYBRID LAMINATED BAGS HAVING AN INTERIOR OF ANTISTATIC MATERIAL WITH AN OUTER METALLIZED LAYER
- LABEL WITH SENSITIVE ELECTRONIC SYMBOL AND CAUTION NOTE

This manual contains copyright material reproduced by permission of IFR Incorporated.

TECHNICAL MANUAL
NO. 11-6625-3016-14

HEADQUARTERS
DEPARTMENT OF THE ARMY
Washington, D.C., 18 June 1982

OPERATOR'S, ORGANIZATIONAL, DIRECT SUPPORT, AND GENERAL SUPPORT MAINTENANCE MANUAL

TEST SET, RADIO AN/GRM-114

(IFR NO. FM/AM-1000S,
MM-100/W PB-114,
AC-114 ACCESSORY KIT)

(NSN 6625-01-108-6206)

REPORTING ERRORS AND RECOMMENDING IMPROVEMENTS

You can help improve this manual. If you find any mistakes or if you know of a way to improve the procedures, please let us know. Mail your letter, DA Form 2028 (Recommended Changes to Publications and Blank Forms), or DA 2028-2 located in back of this manual direct to: Commander, US Army Communications-Electronics Command, ATTN: DRSEL-ME-MQ, Fort Monmouth, New Jersey, 07703.

In either case, a reply will be furnished direct to you.

TABLE OF CONTENTS

		Paragraph	Page
CHAPTER 1.	INTRODUCTION		
Section I.	General		
	Scope	1-1	1-1
	Maintenance forms, records, and reports	1-2	1-1
	Reporting equipment improvement recommendations	1-3	1-1
	Administrative storage	1-4	1-1
	Destruction of Army electronics materiel	1-5	1-1
II.	Description and data		
	Purpose	1-6	1-1
	Use	1-7	1-1
	Description and capabilities	1-8	1-1
	Equipment characteristics	1-9	1-1
	Items supplied	1-10	1-6
	Items required (but not supplied)	1-11	1-6
	Warranty information	1-12	1-7
	Safety precautions	1-13	1-8

		Paragraph	Page
CHAPTER 2.	PREPARATION FOR USE AND INSTALLATION		
	Unpacking	2-1	2-1
	Assembly	2-2	2-1
	Checking unpacked equipment	2-3	2-1
	Siting	2-4	2-1
	Installation instructions	2-5	2-1
	Power requirements	2-6	2-3
	Initial checks and alignment	2-7	2-3
CHAPTER 3.	THEORY OF OPERATION		
	General theory	3-1	3-1
	Receive theory	3-2	3-1
	Generate theory	3-3	3-4
	Frequency error theory	3-4	3-6
	1st local oscillator theory	3-5	3-8
	2nd local oscillator theory	3-6	3-8
	Dual tone generator theory	3-7	3-8
	Oscilloscope theory	3-8	3-12
	Spectrum analyzer theory	3-9	3-14
	MM-100 (Multimeter) theory	3-10	3-14
	Power supply theory	3-11	3-18
CHAPTER 4.	OPERATING INSTRUCTIONS		
	Operating procedures	4-1	4-1
	AN/GRM-114 controls, indicators, and connectors	4-2	4-1
	Operating procedures	4-3	4-13
	RF signal generator operating instructions	4-4	4-13
	Oscilloscope operating instructions	4-5	4-24
	Receiver operating instructions	4-6	4-28
	Spectrum analyzer operating instructions	4-7	4-37
	Audio generator operating instructions	4-8	4-48
	Power monitor function	4-9	4-58
	Master oscillator calibration	4-10	4-58
	Frequency error measurement	4-12	4-65
	Audio frequency monitor function	4-13	4-70
	Multimeter operating instructions	4-14	4-70
CHAPTER 5.	MAINTENANCE INSTRUCTIONS		
	General	5-1	5-1
	AN/GRM-114 routine maintenance checks and services	5-2	5-1
	Tools and test equipment	5-3	5-1
	Glossary	5-4	5-4
	AN/GRM-114 performance test	5-5	5-4
	AN/GRM-114 troubleshooting	5-6	5-6
	AN/GRM-114 alignment and adjustments	5-7	5-112
	Component location diagrams	5-8	5-125
	Inspection	5-9	5-125
	Performance verification	5-10	5-125
	Disassembly instructions	5-11	5-125
	Reassembly instructions	5-12	5-166

		Paragraph	Page
CHAPTER 5. (Continued)	Preparation for reshipment or limited storage	5-13	5-176
	Demolition to prevent enemy use	5-14	5-176
CHAPTER 6.	SCHEMATIC DIAGRAMS		6-1
APPENDIX A.	REFERENCES		A-1
B.	COMPONENTS OF END ITEM LIST		B-1
C.	ADDITIONAL AUTHORIZATION LIST (Not Applicable)		
D.	MAINTENANCE ALLOCATION CHART		D-1
E.	EXPENDABLE SUPPLIES AND MATERIALS LIST (Not Applicable)		
F.	PINOUT TABLE FOR EXT ACC CONNECTOR		F-1

LIST OF ILLUSTRATIONS

Figure	Title	Page
1-1	Test set radio AN/GRM-114	1-0
2-1	AN/GRM-114 packaging	2-2
3-1	AN/GRM-114 general block diagram	3-2
3-2	Receive block diagram	3-3
3-3	Generate block diagram	3-5
3-4	Frequency error block diagram	3-7
3-5	1st local oscillator block diagram	3-9
3-6	2nd local oscillator block diagram	3-10
3-7	Dual tone generator block diagram	3-11
3-8	Oscilloscope block diagram	3-13
3-9	Spectrum analyzer circuit board 1 block diagram	3-15
3-10	Spectrum analyzer circuit board 2 block diagram	3-16
3-11	MM-100 (multimeter) block diagram	3-16
3-12	Power supply block diagram	3-18
4-1	AN/GRM-114 controls, indicators, and connectors	4-2
4-2	RF signal generator controls, indicators and connectors	4-15
4-3	Oscilloscope controls, indicators, and connectors	4-24
4-4	Receiver controls, indicators, and connectors	4-28
4-5	Spectrum analyzer controls, indicators, and connectors	4-37
4-6	Audio generator controls, indicators, and connectors	4-39
4-7	Frequency error measurement controls, indicators, and connectors	4-67
5-1	Flowchart symbol application	5-7
5-2	AN/GRM-114 performance test	5-8
5-3	Power supply troubleshooting	5-21
5-4	Audio frequency monitor troubleshooting	5-37
5-5	Receiver troubleshooting	5-44
5-6	Oscilloscope and spectrum analyzer troubleshooting	5-58
5-7	Frequency error measurement troubleshooting	5-68
5-8	RF signal generator troubleshooting	5-72
5-9	Dual tone generator - troubleshooting	5-91
5-10	RF wattmeter troubleshooting	5-94
5-11	TCXO and output distribution amplifier troubleshooting	5-98
5-12	MM-100 multimeter troubleshooting	5-102
5-13	Zero beat pattern	5-120
5-14	Front panel A1A1 (rear view) component location diagram	5-126
5-15	Mother board A1A2 component location diagram	5-127
5-16	Upper floor assemblies A1A3 component location diagram	5-128
5-17	Transmitter sensor A1A4 component location diagram	5-129
5-18	108 MHz bandpass filter A1A5 component location diagram	5-130
5-19	1200 MHz amplifier A1A6 component location diagram	5-130
5-20	Static discharge protector A1A7 component location diagram	5-130
5-21	Rear panel A1A8 component location diagram	5-131
5-22	Duty cycle regulator A1A8A1 component location diagram	5-132
5-23	High frequency phase-lock loop A1A9 component location diagram	5-132
5-24	79-80 MHz loop A1A10 component location diagram	5-133
5-25	VCO tuner A1A11 component location diagram	5-134
5-26	Dual tone generator A1A12 component location diagram	5-135
5-27	250 kHz I.F. monitor audio circuit board A1A13 component location diagram	5-136

LIST OF ILLUSTRATIONS — Continued

Figure	Title	Page
5-28	Regulator and power supply A1A14 component location diagram	5-137
5-29	1080 MHz multiplier amplifier A1A15 component location diagram	5-138
5-30	1200 MHz diode switch A1A6 component location diagram	5-138
5-31	Power monitor A1A7 component location diagram	5-139
5-32	Spectrum analyzer A1A18 component location diagram	5-140
5-33	Spectrum analyzer module no. 1 A1A18A1 component location diagram	5-141
5-34	Spectrum analyzer module no. 2 A1A18A3 component location diagram	5-141
5-35	Oscilloscope main circuit board A1A18A4 component location diagram	5-142
5-36	1st mixer A1A19 component location diagram	5-143
5-37	2nd mixer A1A20 component location diagram	5-144
5-38	100 MHz filter A1A21 component location diagram	5-145
5-39	100 MHz amplifier/108 MHz mixer A1A24A1 component location diagram	5-145
5-40	120 MHz receiver A1A24A2 component location diagram	5-146
5-41	FM/AM generator A1A24A3 component location diagram	5-147
5-42	Relay driver A1A25 component location diagram	5-148
5-43	High level amplifier A1A28 component location diagram	5-148
5-44	High frequency multiplier/mixer A1A26 component location diagram	5-149
5-45	MM-100 assembly A2A1A1 component location diagram	5-150
5-46	AN/GRM-114 disassembly/reassembly diagram	5-179
5-47	Front panel disassembly/reassembly diagram	5-181
5-48	Upper floor disassembly/reassembly diagram	5-182
5-49	MM-100 multimeter disassembly/reassembly diagram	5-183
6-1	AN/GRM-114 mother board A1A2, schematic diagram (2 sheets)	6-3
6-2	AN/GRM-114 interconnect A1, schematic diagram (2 sheets)	6-7
6-3	AN/GRM-114 front panel assembly A1A1, schematic diagram (2 sheets)	6-11
6-4	AN/GRM-114 coaxial cable assembly A1A22, schematic diagram	6-15
6-5	AN/GRM-114 upper floor assembly A1A3, schematic diagram	6-17
6-6	Heterodyne amplifier ÷2 prescaler A1A3A1, schematic diagram	6-19
6-7	1200-2200 MHz oscillator A1A3A2, schematic diagram	6-21
6-8	AGC system A1A3A3, schematic diagram	6-23
6-9	Clock divider A1A3A4, schematic diagram	6-25
6-10	TCXO output distribution amplifier A1A3A5, schematic diagram	6-27
6-11	Transmitter sensor A1A4, schematic diagram	6-29
6-12	108 MHz bandpass filter A1A5, schematic diagram	6-31
6-13	1200 MHz amplifier A1A6, schematic diagram	6-33
6-14	Static discharge protector A1A7, schematic diagram	6-35
6-15	Rear panel assembly A1A8, schematic diagram	6-37
6-16	Duty cycle regulator A1A8A1, schematic diagram	6-39
6-17	High frequency phase lock A1A9, schematic diagram	6-41
6-18	79-80 MHz loop A1A10, schematic diagram (2 sheets)	6-43
6-19	VCO tuner A1A11, schematic diagram	6-47
6-20	Dual tone generator A1A12, schematic diagram (2 sheets)	6-49
6-21	250 kHz i.f. monitor audio A1A13, schematic diagram (3 sheets)	6-53
6-22	Regulator and power supply A1A14, schematic diagram	6-59
6-23	1080 MHz multiplier amplifier A1A15, schematic diagram	6-61
6-24	1200 MHz diode switch A1A16, schematic diagram	6-63
6-25	Power monitor A1A17, schematic diagram	6-65
6-26	Spectrum analyzer A1A18, schematic diagram	6-67
6-27	Spectrum analyzer module no. 1 A1A18A1, schematic diagram	6-69
6-28	Oscilloscope inverter board A1A18A2, schematic diagram	6-71

LIST OF ILLUSTRATIONS — Continued

Figure	Title	Page
6-29	Spectrum analyzer module no. 2 A1A18A3, schematic diagram (3 sheets)	6-73
6-30	Oscilloscope main circuit board A1A18A4, schematic diagram (2 sheets)	6-79
6-31	Spectrum analyzer front plate assembly A1A18A5, schematic diagram	6-83
6-32	First mixer A1A19, schematic diagram	6-85
6-33	Second mixer A1A20, schematic diagram	6-87
6-34	100 MHz filter A1A21, schematic diagram	6-89
6-35	Battery, modified A1A23, schematic diagram	6-91
6-36	100 MHz amplifier/108 MHz mixer A1A24A1, schematic diagram	6-93
6-37	120 MHz receiver A1A24A2, schematic diagram (2 sheets)	6-95
6-38	FM/AM generator A1A24A3, schematic diagram	6-99
6-39	Relay driver A1A25, schematic diagram	6-101
6-40	High frequency multiplier/mixer A1A26, schematic diagram	6-103
6-41	Frequency select switch A1A27, schematic diagram	6-105
6-42	High level amplifier A1A28, schematic diagram	6-107
6-43	MM-100 assembly A2A1, schematic diagram (3 sheets)	6-109

LIST OF TABLES

Number	Title	Page
1-1	Physical characteristics	1-2
1-2	Electrical characteristics	1-2
1-3	Environmental characteristics	1-6
1-4	Items supplied	1-6
4-1	AN/GRM-114 controls, indicators, and connectors	4-1
4-2	AN/GRM-114 operating instructions	4-13
4-3	RF signal generator initial adjustments and control settings	4-15
4-4	RF signal generator operating instructions	4-16
4-5	RF signal generator operating instructions for AM RF signals	4-18
4-6	RF signal generator operating instructions for FM RF signals	4-22
4-7	Oscilloscope initial adjustments and control settings	4-25
4-8	Oscilloscope operating procedures	4-25
4-9	Initial adjustments and control settings	4-29
4-10	Receiver operating instructions	4-29
4-11	Initial adjustments and control settings	4-38
4-12	Spectrum analyzer operating instructions	4-38
4-13	Spectrum analyzer operating instructions for spurious signal detection	4-43
4-14	Audio generator initial adjustment and control settings	4-49
4-15	Audio generation with MM-100 operating instructions	4-50
4-16	Audio generation with oscilloscope operating instructions	4-53
4-17	Power monitor operating instructions for measuring transmitter carrier power	4-58
4-18	Master oscillator calibration using received time standard signal	4-61
4-19	Master oscillator calibration using an external frequency standard	4-65
4-20	Initial adjustments and control settings	4-68

LIST OF TABLES — Continued

Number	Title	Page
4-21	Frequency error measurement operating instructions	4-68
4-22	Multimeter operating instructions	4-71
5-1	Tools and test equipment	5-1
5-2	Glossary of abbreviations	5-4
5-3	AN/GRM-114 performance test - initial conditions	5-5
5-4	AN/GRM-114 performance test - initial conditions	5-6
5-5	Receiver troubleshooting - initial conditions	5-41
5-6	1st and 2nd local oscillators	5-41
5-7	Frequency error measurement - initial conditions	5-65
5-8	1st and 2nd local oscillators	5-65
5-9	RF signal generator troubleshooting initial conditions	5-71
5-10	AN/GRM-114 assemblies and interactive assemblies	5-112
5-11	VCO tuner adjustment	5-114
5-12	Tune pulse frequency and amplitude tests	5-116
5-13	Disassembly sequence	5-151

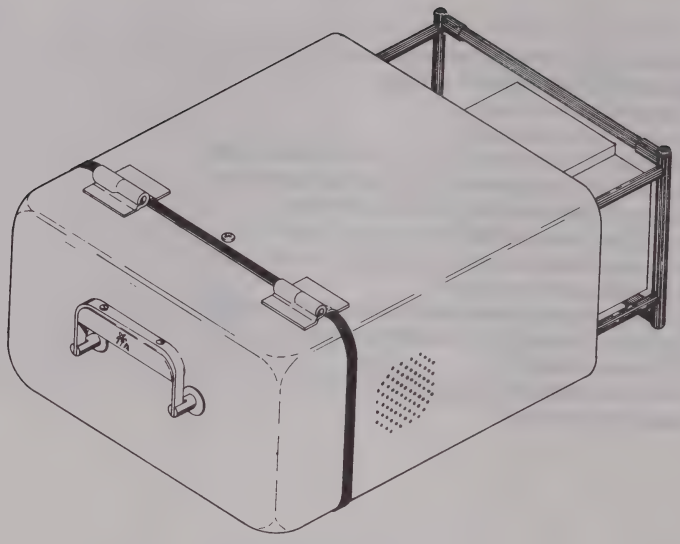

CASE CLOSED

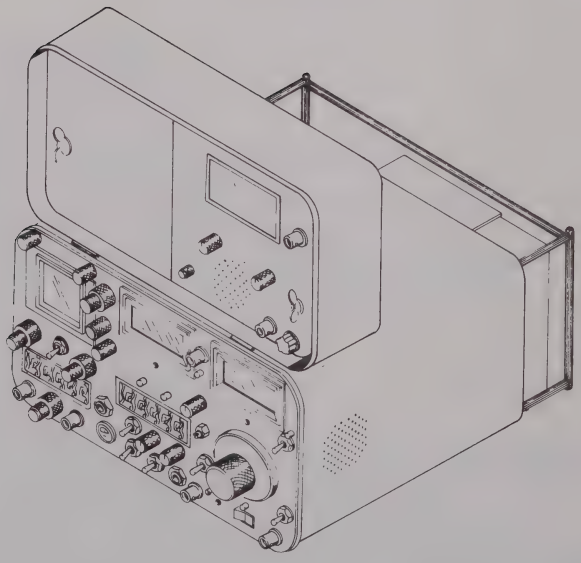

CASE OPEN

Figure 1-1. Test Set Radio AN/GRM-114

CHAPTER I

INTRODUCTION

Section I. GENERAL

1-1. Scope.

a. This manual describes Test Set, Radio AN/GRM-114 and contains information for installation, operation, and direct support (DS), and general support (GS) maintenance.

b. Repair parts and special tools to support the AN/GRM-114 are listed in TM11-6625-3016-24P.

1-2. Maintenance Forms, Records, and Reports.

a. *Reports of Maintenance and Unsatisfactory Equipment.* Department of the Army forms and procedures used for equipment maintenance will be those prescribed by TM 38-750, The Army Maintenance Management System.

b. *Report Packaging and Handling Deficiencies.* Fill out and forward SF 364 (Report of Discrepancy (ROD)) as prescribed in AR 735-11-2/DLAR 4140.55/NAVMATINST 4355.73/AFR 400.54/MCO 4430.3E.

c. *Discrepancy in Shipment Report (DISREP) (SF 361).* Fill out and forward Discrepancy in Shipment Report (DISREP) (SF 361) as prescribed in AR 55-38/NAVSUPINST 4610.33B/AFR 75-18/MCO P4610.19C/DLAR 4500.15.

1-3. Reporting Equipment Improvement Recommendations (EIR). If your AN/GRM-114 needs improvement, let us know. Send us an EIR. You, the user, are the only one who can tell us what you don't like about your equipment. Let us know why you don't like the design. Tell us why a procedure is hard to perform. Put it on an SF 368 (Quality Deficiency Report). Mail it to Commander, US Army Communications-Electronics Command, ATTN: DRSEL-ME-MQ, Fort Monmouth, New Jersey 07703. We'll send you a reply.

1-4. Administrative Storage. Administrative storage of equipment issued to and used by Army activities will have preventive maintenance performed in accordance with the PMCS charts before storing. When removing the equipment from administrative storage, the PMCS should be performed to assure operational readiness. Disassembly and repacking of equipment for shipment or limited storage are covered in paragraph 5-7.

1-5. Destruction of Army Electronics Materiel. Destruction of Army electronics materiel to prevent enemy use shall be in accordance with TM 750-244-2.

Section II. DESCRIPTION AND DATA

1-6. Purpose. Test Set, Radio, hereinafter referred to as Communications Service Monitor AN/GRM-114, or AN/GRM-114, (fig. 1-1) is a compact, light-weight, portable maintenance instrument which provides test and measurement capabilities to effectively test and service a variety of avionics and communications equipments.

1-7. Use. The AN/GRM-114 contains an internal rechargeable battery pack, and can be used almost anywhere without concern for immediate power. It can also be operated from an ac line voltage or an external dc source.

1-8. Description and Capabilities. The AN/GRM-114 incorporates the functions of an FM/AM signal generator, FM/AM receiver, RF spectrum analyzer, oscilloscope, audio generator, power monitor, and a multimeter. These functions permit the test set to perform general diagnostic tests and transmitter/receiver performance tests.

1-9. Equipment Characteristics. Table 1-1 lists the physical characteristics of the Communications Service Monitor AN/GRM-114. Table 1-2 lists the electrical characteristics, and table 1-3 lists the environmental characteristics.

Table 1-1. Physical Characteristics

Characteristics	Specification
Power:	110/230 V ac, 50 to 400 Hz or 11 to 28 V dc
Size:	12.5 in wide (31.8 cm), 8 in high (20.3 cm), 19.5 in deep (49.5 cm)
Weight:	Approximately 52 lb (22.4 kg)
Typical DC Currents:	4.3 A at 12 V and 1.85 A at 28 V (With oscilloscope/receiver ON and Dual Tone Generator/Spectrum Analyzer OFF)
Typical Power Consumption:	80 W
Internal Battery:	12 V dc 5.0 Ah

Table 1-2. Electrical Characteristics

Characteristics	Specification
RF Signal Generator	
Frequency Range:	100 Hz to 999.9999 MHz in 100-Hz steps
Frequency Accuracy:	5×10^{-7} (±0.00005%) 2×10^{-7} (typically) (See specification on TCXO Master Oscillator)
FM Quieting:	42 dB below 3.3 kHz deviation at 1-kHz rate, as measured in a 0.3 to 3-kHz post-detection bandwidth
Residual FM:	Less than 100 Hz
RF Output Power:	—130 dBm to —33 dBm (100 Hz-999.9999 MHz) —130 dBm to —0 dBm (20 kHz-16 Hz) continuously variable into 50 Ω
Ranges:	NORM (Normal), μV x 100, and HI LVL (High Level) (0 dBm)
Accuracy:	—110 to —35 dBm ±2.5 dB to 400 MHz ±3.0 dB above 400 MHz These specifications may not be met at certain frequencies as a result of the internal design of the unit

Table 1-2. Electrical Characteristics — Continued

Characteristics	Specification
"HI Level" Power Range	0 dBm; ±2.5 dB (20 kHz to 600 MHz) ±4.0 dB (600 MHz to 999.9999 MHz) Dial indicator accuracy (dBm scale) is maintained relative to 0-dBm indication
Internal Modulation	
AM:	10 Hz to 5 kHz (0 to 90%)
FM:	10 Hz to 9999.9 Hz rate, 0 to ±15 kHz deviation
External Modulation	
AM:	3.0 V (±1 V) peak-to-peak produces 90% modulation
FM:	6.0 V (±2 V) peak-to-peak produces ±15 kHz deviation (maximum modulating frequency = 15 kHz)
Oscilloscope	
Display Size:	5 x 5 cm
Vertical Bandwidth:	DC to 1 MHz (at 3-dB bandwidth) ac or dc inputs
External Vertical Input Ranges:	10 mV, 100 mV, 1 V, 10 V per division
Horizontal Sweep Rate:	10 ms, 1 ms, 100 μs, 10 μs per division
Spectrum Analyzer	
Dynamic Range:	70 dB (−30 dBm to −100 dBm)
Dispersion:	Continuous from ±0.5 MHz to ±5 MHz from center frequency (1 to 10 MHz span)
Bandwidth Resolution:	30 kHz
Audio Generator	
Frequency Range	
Variable Tone:	10.0 Hz to 9999.9 Hz
Fixed Tone:	1 kHz
Accuracy	
Fixed Tone:	±20 Hz
Variable Tone:	0.01%
Resolution:	0.1 Hz
Output Level:	0 to 2.9 V rms minimum for either tone into 150 Ω

Table 1-2. Electrical Characteristics — Continued

Characteristics	Specification
Distortion	
10 Hz to 100 Hz:	2% maximum
100 Hz to 9999.9 Hz:	0.7% maximum
Fixed Tone:	2% maximum
Receiver/Monitor	
Frequency Range:	300 kHz to 999.9999 MHz
Resolution:	100 Hz
10 dB Sinad Sensitivity:	2 μV (typical)
Selectivity at 3 dB Point	
Narrow:	Receiver 15 kHz; detector audio bandwidth is 8 kHz
Mid:	Receiver 150 kHz; detector audio bandwidth is 8 kHz
Wide:	Receiver 150 kHz; detector audio bandwidth is 80 kHz
Quieting:	Deviation measurements can be made down to 0.1 kHz
Adjacent Channel Rejection:	Greater than 25 dB at ±25 kHz (typical)
	Greater than 40 dB at ±50 kHz (typical)
Beat Frequency Oscillator Accuracy:	BFO is phase-locked to master oscillator ±3 dB, from 2 μV to 5000 μV
Demodulation Output Level AM:	100% = 0.5 V peak-to-peak nominal
FM:	±10 kHz = 0.65 V peak-to-peak nominal
Receiver Antenna Input Protection:	0.25 watts maximum level without damage
Power Monitor	
Frequency Range:	1 MHz to 1 GHz
Power Ranges:	0 to 10 and 0 to 100 watts
Accuracy	
1 to 600 MHz:	±10%
600 MHz to 1 GHz:	±20% of reading plus 3% of full scale
Input Power:	20 watts continuous; 100 watts for 10 seconds

Table 1-2. Electrical Characteristics — Continued

Characteristics	Specification
TCXO Master Oscillator	
Accuracy:	5×10^{-7} (±0.00005%), 2×10^{-7} (typical). Greater accuracy is attainable with front-panel adjustment
Aging Stability:	2 to 3 ppm during first year; 1 ppm per year thereafter
Frequency Error Meter Measurement Capability	
Meter Sensitivity:	Typically 1.5 μV above 1 MHz (sensitivity is reduced below 1 MHz)
Ranges:	±1.5 kHz, ±5 kHz, ±15 kHz (full scale)
Resolution:	50 Hz (calibration marks at 100 Hz on ±1.5-kHz range)
Zeroing:	Frequency error meter is automatically zeroed every 1.5 seconds during a 3-ms time period. Auto zeroing may be disabled with AUTO/OFF/ZERO, BATT switch
MM-100 Multimeter	
SINAD	
Range:	3-20 dB
Accuracy:	±1.5 dB
Distortion (DIST)	
Range:	0-10%, and 0-30%
±DC Volts	
Ranges:	.1V, .3V, 1V, 3V, 10V, 30V, 100V, and 300V (full scale)
Accuracy:	±3% full scale (1 MΩ input Z)
AC Volts	
Range:	.1 to 300 V rms full scale
Accuracy:	±3% full scale (25 Hz - 25 kHz)
Selectable Impedances:	3.2, 8, 150, and 600 Ω, and 1 MΩ unbalanced

Table 1-2. Electrical Characteristics — Continued

Characteristics	Specifications
AM% Range:	0-100%
AC Load	HI-Z (1 MΩ)
Ohms	30 Ω center scale x 1
Fuse	1/32 A normal blow

Table 1-3. Environmental Characteristics

Characteristics	Specifications
Temperature Range	
Internal, Test Set	(32 to 122° F) 0 to 50° C

1-10. Items Supplied. Table 1-4 lists the items supplied.

1-11. Items Required (but not supplied). Items required that are not supplied are listed in table 5-1, Tools and Test Equipment.

Table 1-4. Items Supplied

Item	Quantity
AN/GRM-114 (includes multimeter MM-100)	1
Attenuator 10 dB Input 150 watts	1
10 dB attenuator	1
20 dB attenuator	1
30 dB attenuator	1
Cigarette lighter adpater plug DC power cord	1
Test probe for multimeter	1
Cable BNC on one end, N-type connector on other end	1
Antenna	1
90° BNC Connector	1

Table 1-4. Items Supplied - Continued

Item		Quantity
Spare fuses		4
1/32 A	250 V	1
1 1/4 A	125 V Slow Blow	1
7 1/2 A	32 V	2
Allen Wrench		1
Power cord AC		1
Canvas Cover/Carrying Case		1
Technical Manual TM11-6625-3016-14		1

1-12. Warranty Information.

a. *Warranty.*

(1) IFR, Inc. warrants that each new instrument manufactured by it is free from defects in material or workmanship under normal use and service for a period of two years from the shipping date. (NOTE: 90 day warranty on battery pack). Each instrument is functionally tested immediately prior to shipment. If, upon examination by IFR, the instrument is determined to be defective in workmanship or material, IFR will, subject to the conditions set forth below, either repair the defective part or replace it with a new part on a pro rata basis. IFR shall not be liable for any delay or failure to furnish a replacement part resulting directly or indirectly from any governmental restriction, priority or allocation or any other governmental regulatory order or action, nor shall IFR be liable for damages by reason of the failure of the instrument to perform properly or for any consequential damages. The warranty does not apply to any instrument that has been subject to negligence, accident, shipping damage, misuse or improper installation or operation, or that in any way has been tampered with, altered or repaired by any person other than an authorized IFR service organization or any employee thereof, or to any instrument whose serial number has been altered, defaced or removed, or to any instrument purchased within, and thereafter removed beyond, the continental limits of the United States. Annual recalibration is not included in warranty.

(2) All sales are FOB IFR Factory Wichita. IFR will assume responsibility for freight charges on all legitimate warranty claims within thirty (30) days from the original shipping date. All legitimate warranty claims within thirty (30) to ninety (90) days should be shipped to IFR freight collect and will be returned freight collect. All freight on warranty claims after ninety (90) days will be paid by the customer.

(3) This warranty shall, at IFR's option, become void if the equipment ownership is changed, unless the prior owner or the proposed owner obtains approval of continuation of the warranty prior to the change of ownership.

(4) This warranty is in lieu of all other warranties, expressed or implied, and no one is authorized to assume any liability on behalf of IFR or impose any obligation upon it in connection with the sale of any instrument, other than as stated above.

(5) The right is reserved to change the published specifications of the equipment at any time and to furnish merchandise in accordance with current specifications without incurring any liability to modify equipment previously sold, or to supply new equipment in accordance with earlier specifications except the classification of special apparatus.

b. *Service.*

(1) When requesting service, the originator shall give IFR information concerning the nature of the failure and the manner in which the equipment was used when the failure occurred. Type, model, and serial number should also be provided.

(2) Do not return any products to the factory without first receiving authorization from the factory Customer Service Department.

CONTACT: IFR, Inc.
10200 W. York St.
Wichita, Kansas 67215 USA
ATTN: Customer Service Depart.
PHONE: (800) 835-2350
(Customer Service Only)
TWX: 910-741-6952

(3) Unless otherwise specifically requested, packaging for a return shipment shall be in the original container and packaging material. If the original container and material are not available, information as to suitable packaging techniques will be provided by the IFR Shipping Department.

(4) Returned material claimed defective, but found to meet all previously applicable specifications, will be subject to a minimum evaluation charge consisting of the labor charges involved in the status determination of the material.

(5) Returned material not accompanied by statement of claimed defects may be returned at the originator's expense.

(6) All freight costs on non-warranty shipments are assumed by the customer.

(7) Any departure from the above instructions without specific factory authorization can be considered a breach of warranty, and all expenses incurred as a result will be billed to the originator.

1-13. Safety Precautions. Listed below are several important safety precautions which must be observed during all phases of installation and operation. IFR Inc. assumes no liability for customer's failure to comply with any of the safety precautions outlined in this manual.

a. Complying with Instructions. Installation/operating personnel should not attempt to install or operate AN/GRM-114 without reading and complying with all instructions contained in this manual. All procedures contained in this manual must be performed in exact sequence and manner described.

b. Grounding Requirements. To minimize shock hazard, chassis and case of AN/GRM-114 must be connected to an electrical ground. The unit is furnished with an ac and dc power cable, each of which incorporates a ground pin for this purpose. The ac power cable is equipped with a standard 3-pin grounded plug on one end which must be connected only to a properly grounded 3-pin wall receptacle.

WARNING

Due to potential safety hazards, use of three-prong to two-prong adapter plug is not recommended.

The dc power cable features a cigarette lighter adapter on one end.

c. Operating Safety. Due to presence of potentially lethal voltages within AN/GRM-114, operating personnel must not remove test equipment covers at any time. Component replacement and internal adjustments must be made by qualified maintenance personnel only.

d. Observing CAUTION and WARNING Labels. Extreme care should be exercised when performing any operations preceded by a CAUTION or WARNING label. CAUTION labels appear where possibility of damage to equipment exists, while WARNING notes denote a condition where a shock hazard exists, exposing personnel to possible bodily injury.

CHAPTER 2

PREPARATION FOR USE AND INSTALLATION

2-1. Unpacking. Refer to figure 2-1 and paragraph 1-2., c for AN/GRM-114 packaging.

a. Position shipping carton with "OPEN THIS END" label facing up.

b. Remove packing slip attached to top side of carton. (Use packing slip to confirm receipt of all goods as listed.)

c. Cut and remove white hold-down straps from shipping carton.

d. Cut tape along top 3 edges of carton to open lid.

e. Remove WARRANTY INFORMATION PACKET from carton.

f. Remove top packing mold from carton.

g. Unwrap polyethylene sheeting from top of canvas carrying case.

h. Carefully lift canvas carrying case from carton by handle and remove polyethylene sheeting and bottom packing mold.

i. Unzip carrying case and carefully remove AN/GRM-114.

j. Save shipping carton and all packing material for possible reuse.

2-2. Assembly. The AN/GRM-114 comes fully assembled, except for the antenna. Refer to chapter 5, paragraph 7 for assembly instructions and drawings.

2-3. Checking Unpacked Equipment.

a. Inspect all equipment for visible or concealed damage which may have occurred during shipment. If the equipment has been damaged, refer to "RECEIVING INSPECTION/UNPACKING" sticker affixed to shipping container for "Damage Claim" procedure.

b. Check the equipment and accessories against the packing slip. Report all discrepancies in accordance with the "Damage Claim" procedure.

2-4. Siting. The AN/GRM-114 may be battery operated in nearly any location. Mobile, aircraft, or marine operation is possible directly from 11- to 28- V dc power systems, using a furnished cigarette lighter adapter plug. AC operation is possible from 110/230-V ac, 50- to 400-Hz power sources.

2-5. Installation Instructions.

a. Extend support bracket on bottom of unit to fully locked position and place the set on flat surface, bottom side down. (Bottom side of unit has four plastic feet.)

b. Unlatch and fold back lid, exposing front panel face of unit. (If desired, lid can be detached from set at hinges by sliding lid to operator's right.)

c. Remove retaining plate inside lid by rotating quick-release latch counterclockwise (ccw) and gently pulling plate straight out from lid.

d. Remove ac and dc power cables from inside of lid, along with 90° BNC connector. Note additional accessories attached to rear side of retaining plate removed in step c. Those accessories include:

4 spare fuses
1 antenna
1 Allen wrench

(Refer to table 5-1 for list of items required but not supplied.)

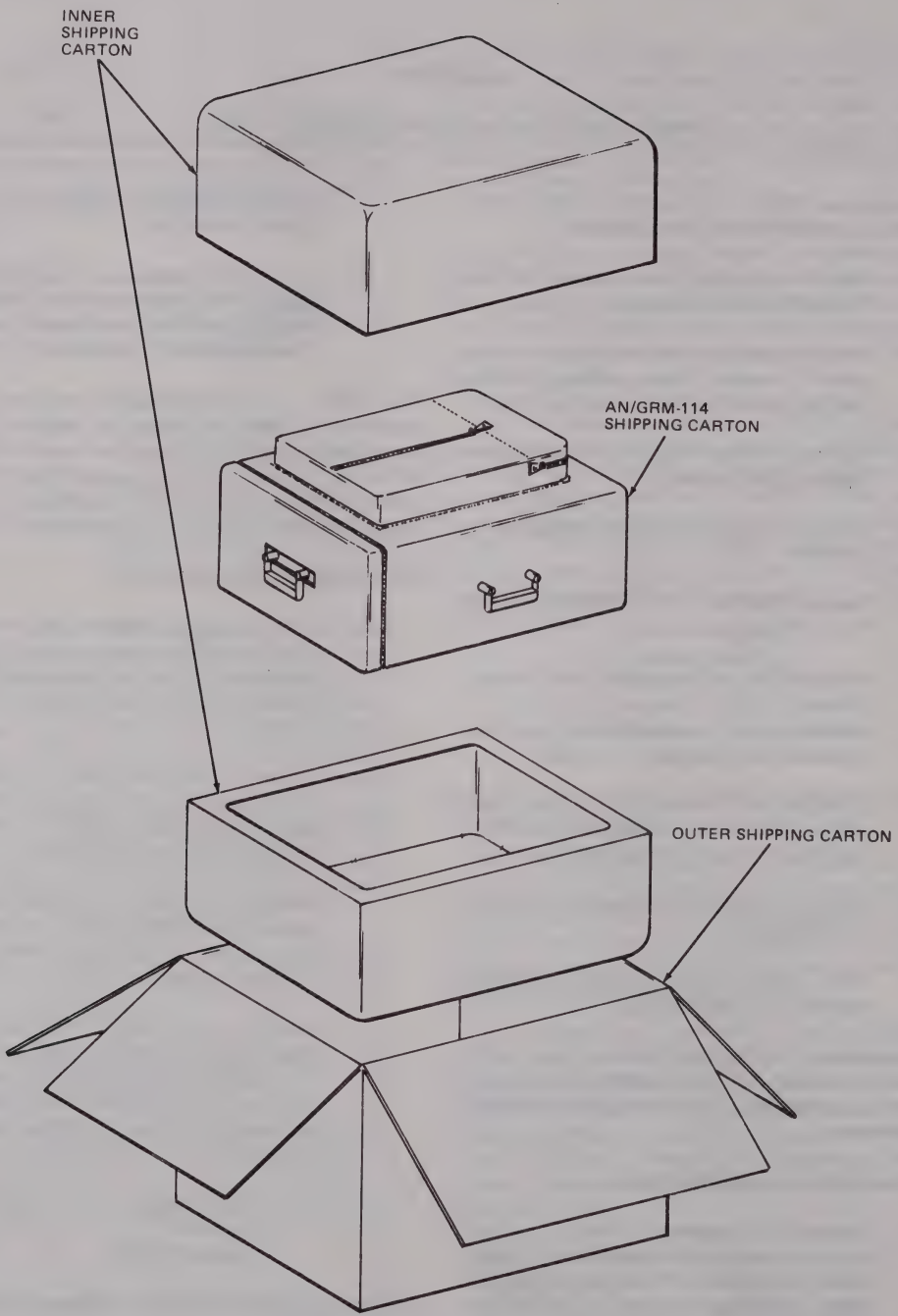

Figure 2-1. AN/GRM-114 packaging.

e. Determine source of power to be used to energize AN/GRM-114 and proceed accordingly:

(1) AC or DC Power

(a) Connect 6-pin socket on end of furnished ac (or dc) power cable to 6-pin external power receptacle on rear of unit.

(b) Connect 3-pin grounded plug on opposite end of ac power cable to standard 3-pin grounded receptacle. (For dc operation, connect cigarette lighter adapter on opposite end of dc power cable to cigarette lighter socket.)

(c) Place PWR/OFF/BATT switch to PWR position to energize set.

(2) Battery Operation

(a) No power cable connections required; place PWR/OFF/BATT switch to BATT position to energize unit.

f. For "off-the-air" testing, antenna must be connected to ANT INPUT connector on front panel of unit. If unit is to be operated in an upright position, antennae may be connected directly to ANT INPUT connector.

If unit is to rest on its support bracket during operation, attach antenna to furnished 90° BNC connector, then attach antenna/90° BNC connector assembly to ANT INPUT Connector.

CAUTION

If an external antenna attached to an unterminated coax cable is used, remove any possible static charge buildup before connecting coax to ANT INPUT connector.

2-6. Power Requirements. The AN/GRM-114 can be powered from its internal battery pack, or from ac or dc power sources. For ac operation, all units are normally factory wired to accept external power sources, which are generally available at the installation site.

NOTE

Before making any ac power connections, check the AN/GRM-114 power rating against the power source rating to insure that they are compatible. If they are not, refer to chapter 5, figure 5-3 for power supply modifications.

Power rating for the AN/GRM-114 can be found on the Model/Serial No. nameplate, which is located on the bottom side of the unit, or in chapter 1, paragraph 7, table 1-1.

An adhesive CAUTION sticker is on all units and power cables wired for operation at 230 V ac. No sticker is on units wired for operation at 110 V ac.

CAUTION

The AN/GRM-114 is designed to operate continuously with inputs of 20 W or less into the TRANS/RCVR connector. Should the input power to the AN/GRM-114 exceed 20 W, use the 10-dB, 150 W power attenuator supplied with the AN/GRM-114. Use of the 10-dB, 150 W attenuator will reduce the incoming power by a factor of 10. If the 10-dB, 150 W attenuator is not available, the following chart must be observed:

100 W	10 sec. on	60 sec. off	15% duty cycle
50 W	20 sec. on	45 sec. off	30% duty cycle
30 W	2 min. on	2 min. off	50% duty cycle

CAUTION

If the AN/GRM-114 is being powered by a vehicular dc supply, unplug the AN/GRM-114 before starting the engine.

2-7. Initial Checks and Alignment. If an external power source is used, either ac, or dc using the cigarette lighter adapter, ensure that the power cable is securely mated to the ac plug on the outside of the AN/GRM-114 rear panel.

CHAPTER 3

THEORY OF OPERATION

NOTE

The schematics referenced in this chapter are located in Chapter 6.

3-1. General Theory. (Refer to Figure 3-1 for a block diagram.)

The AN/GRM-114 Communications Service Monitor is a highly accurate, versatile, portable unit which may be used to monitor, align, and troubleshoot CW, AM, FM and SSB Communications equipment. The unit features a quadruple-conversion digitally-synthesized superheterodyne receiver and a dual-conversion digitally-synthesized low-power rf signal generator. The unit also contains a variable-frequency tone generator and a fixed-frequency tone generator (refer to paragraph 3-7), spectrum analyzer, multimeter (refer to paragraph 3-10) an oscilloscope (refer to paragraph 3-8) and an rf wattmeter. The AN/GRM-114 may be powered (refer to paragraph 3-11) by an external source of 115 or 230 V ac; 11 to 28 V dc, or by the internal 12 volt rechargeable lead-acid battery. The internal battery is kept charged by means of an internal current regulated charger circuit. The charger circuit is energized whenever the AN/GRM-114 ac power cord is connected to an active ac outlet. The charger circuit is energized even when the AN/GRM-114 is turned off. The internal battery may be charged by applying 14 to 16 V dc from an external source to pin 11 of the rear panel power jack. The negative terminal of the external source should be connected to pin 10 of the rear panel power jack.

a. Used as a receiver (refer to paragraph 3-2), the AN/GRM-114 permits the technician to monitor and measure the characteristics of CW, AM, FM and SSB signals from 300.0 kHz to 999.9999 MHz. The FREQUENCY MHz thumbswitches on the front panel control the digital frequency synthesis circuitry (refer to paragraphs 3-5 and 3-6) which tunes the receiver to the selected frequency. The AN/GRM-114 receiver frequency is specified as accurate to within .00005% of the selected frequency. Typically, it is accurate to within .00002%. The 10 MHz TCXO (Master Oscillator) is principally responsible for maintaining receiver frequency accuracy and stability. The demodulated outputs of the receiver may be used to audibly monitor an applied signal, determine its relative signal strength, exact carrier or resting frequency, and modulation characteristics. An Intermediate Frequency (IF) representation of the received signal may be displayed on the Spectrum Analyzer, (refer to paragraph 3-9) where amplitude, bandwidth and spectral purity may be measured and examined.

b. The AN/GRM-114 AM/FM rf signal generator (refer to paragraph 3-3) permits the technician to inject low power CW, AM or FM signals from 100 Hz to 999.9999 MHz into a unit under test (UUT). The FREQUENCY MHz thumbswitches on the front panel control the digital frequency synthesis circuitry which sets the generator to the selected frequency. The AN/GRM-114 rf signal generator frequency is specified as accurate to within .00005% of the selected frequency. Typically it is accurate to within .00002%. The TCXO is principally responsible for maintaining generator frequency accuracy and stability. The rf signal generator may be AM or FM modulated by using the internal Dual Tone Generator and/or an external audio signal applied to the EXT MOD jack on the front panel. FM deviation and depth of AM modulation may be set by adjusting the amplitude of the modulating signal (s). The amount of FM deviation may be read on the DEVIATION (KHz)/WATTS meter (refer to paragraph 3-4) and/or displayed on the oscilloscope. The percentage of AM modulation may be determined by displaying the AM modulation envelope on the oscilloscope and/or by using the AM% modulation function of the Multimeter (MM-100).

3-2. Receive Theory. (Refer to figure 3-2 for a block diagram.)

a. Antenna input is received at the ANT INPUT connector and passes through the Static Discharge Protector which limits voltage and cur-

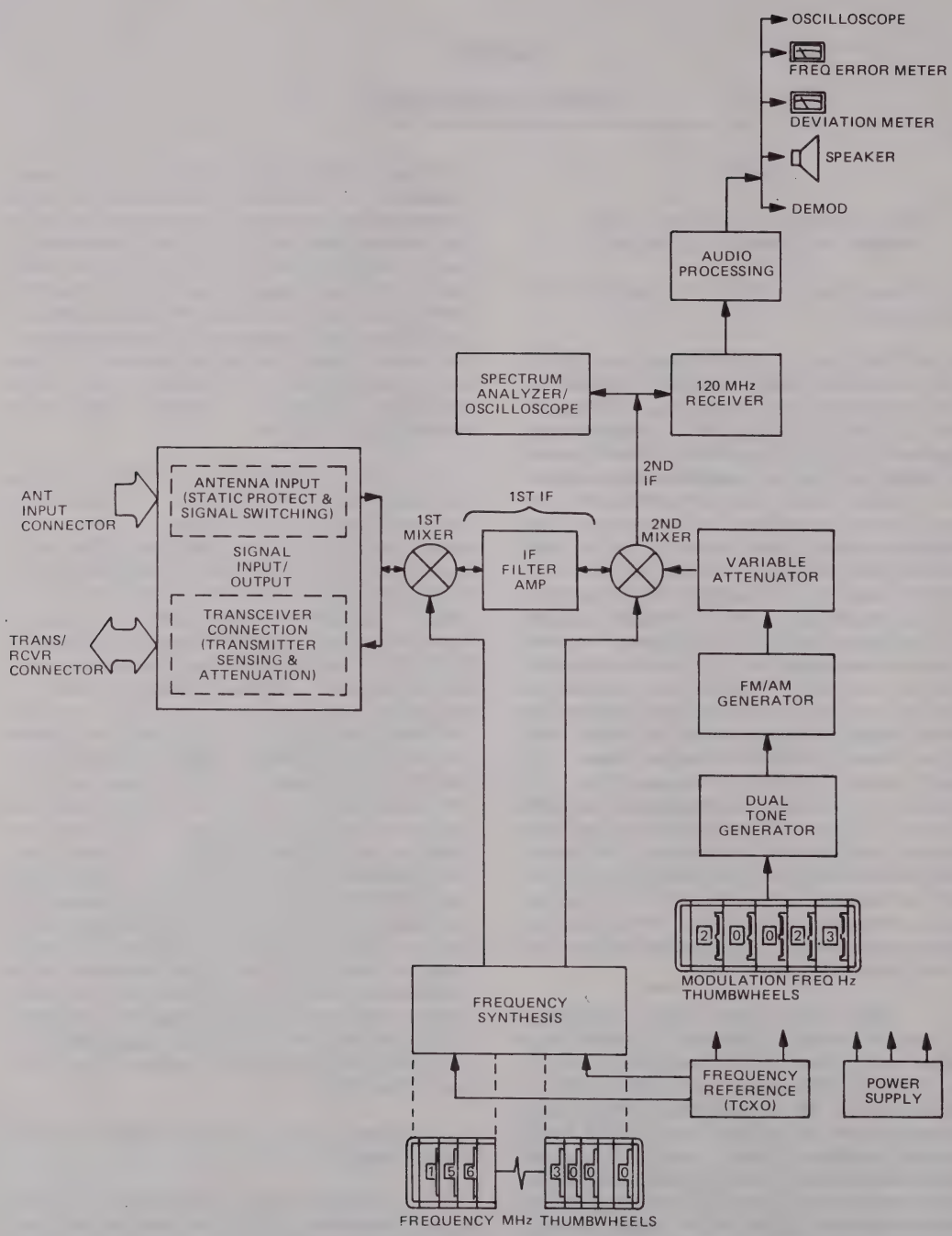

Figure 3-1. AN/GRM-114 block diagram

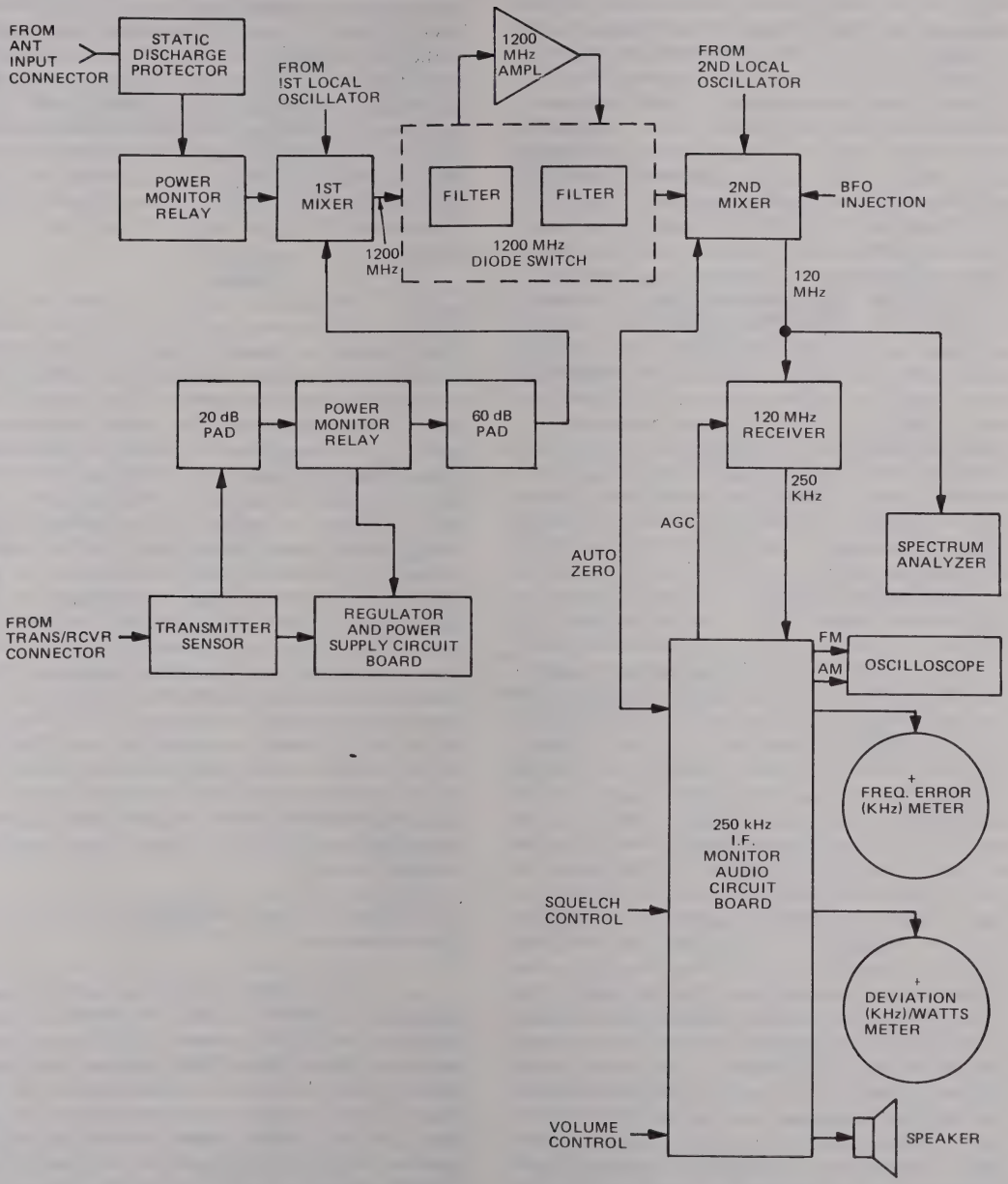

Figure 3-2. Receive block diagram

rent to protect the 1st Mixer (figure 6-32). The Power Monitor Relays (figure 6-25) are de-energized. The 1st Mixer Relays (figure 6-32) are de-energized and the 1st local oscillator signal (refer to figure 3-5 for a block diagram) is present at 1200-MHz above the first three digits of the FREQUENCY MHz thumbwheels. A 1200-MHz intermediate frequency is applied to the 1200-MHz Diode Switch (figure 6-24), where it is filtered. It is then applied to the 1200-MHz Amplifier, and the amplified signal is applied to the 1200-MHz Diode Switch where it is filtered once more. The 1200-MHz signal is applied to the 2nd Mixer (figure 6-33), where the 2nd local oscillator signal (refer to figure 3-6 for a block diagram) is present at 1079.0001-1080.000-MHz, depending on the last four digits of the FREQUENCY MHz thumbwheels. The 2nd Mixer beats the two signals together and the difference signal of 120-MHz is fed through the Receive Diode Switch to the Spectrum Analyzer for display and to the 120-MHz Receiver (figure 6-37). Within the 120-MHz Receiver, the 120-MHz signal beats with a signal from a 109.3-MHz oscillator. The difference signal of 10.7-MHz beats with a signal from a 10.95-MHz oscillator, and the 250-kHz difference signal is applied to the 250-kHz I.F. Monitor Audio Circuit Board (figure 6-21). The signal splits for AM and FM demodulation. AM audio and signal level are detected. The detected signal level operates the AGC and squelch systems. The AGC System controls the gain from the 120-MHz Receiver to the 250-kHz I.F. Monitor Audio Circuit Board. The SQUELCH adjustment controls the squelch threshold, which is the signal level required at the ANT INPUT connector for audio output to be enabled, and the detected signal level is applied to the DEVIATION (KHz)/WATTS meter to display the signal strength. A 250-kHz Intermediate Frequency (I.F.) is applied to the oscilloscope for display of the AM envelope. The 250-kHz I.F. is rectified to a dc level through a discriminator and audio filter. The dc level is the reference for the FREQ. ERROR (KHz) meter. If the I.F. signal increases, the dc level increases moving the FREQ. ERROR (KHz) Meter in the positive direction. If the I.F. signal decreases, the dc level decreases, moving the FREQ. ERROR (KHz)/watts meter in the negative direction. The amount of change in the Intermediate Frequency as it increases or decreases due to modulation is the FM deviation. The rate of change as the Intermediate Frequency increases or decreases is the FM audio signal. This signal is sent to the oscilloscope for monitoring FM deviation and frequency. This signal is also applied to a peak detector to operate the DEVIATION (KHz)/WATTS meter. A separate FM audio output goes to the FM contact of the AM/FM switch. The AM audio output goes to the AM position of the AM/FM switch. The output of the AM/FM switch is the Demod output of the test set. This output is fed to the MM-100 and RCVR contact of the INT MOD/RCVR switch. The output of the INT MOD/RCVR switch passes through the volume control to the audio amp and out to the speaker.

b. Transmitter input is applied at the TRANS/RCVR connector on the front panel. The Transmitter Sensor (figure 6-11) puts the unit into the Receive mode if the GEN/RCVR switch is in the GEN position. The signal is attenuated by a 20-dB pad. The output signal is applied to the Power Monitor relays. The relays are de-energized, the signal passes through the relays, and is detected by the Power Monitor diode. The detected signal is applied to the Regulator and Power Supply Circuit Board (figure 6-22), where it operates the Power Monitor functions on the circuit board. The circuit board sends a signal to the Relay Driver (figure 6-39) to energize the 1st Mixer relays. The applied signal passes through a 60-dB attenuator to the 1st Mixer relay assembly. The signal applied at the TRANS/RCVR connector is therefore attenuated by a total of 80 dB. For example, if 100 watts is applied to the TRANS/RCVR connector, —30 dBm is applied to the 1st Mixer relay assembly. The relays are energized, and pass the signal to the 1st Mixer circuit. From there, the signal follows the same path described in paragraph 3-2.a.

3-3. Generate Theory. (Refer to figure 3-3 for a block diagram.)

a. The 120-MHz FM/AM Generator always generates a 120-MHz signal. This signal is phase locked to the TCXO through a 10-kHz signal from the Clock Divider (figure 6-9). The Dual Tone Generator (figure 6-20) sends an audio signal to the FM/AM Generator applying either AM or FM modulation to the 120-MHz signal, depending on the position of the AM/FM switch. This modulated 120-MHz signal is crossfed to the 2nd Mixer (figure 6-33). The crossfeed diode switch in the 2nd Mixer allows a signal path through the 2nd Mixer to the 120-MHz Receiver and the Spectrum Analy-

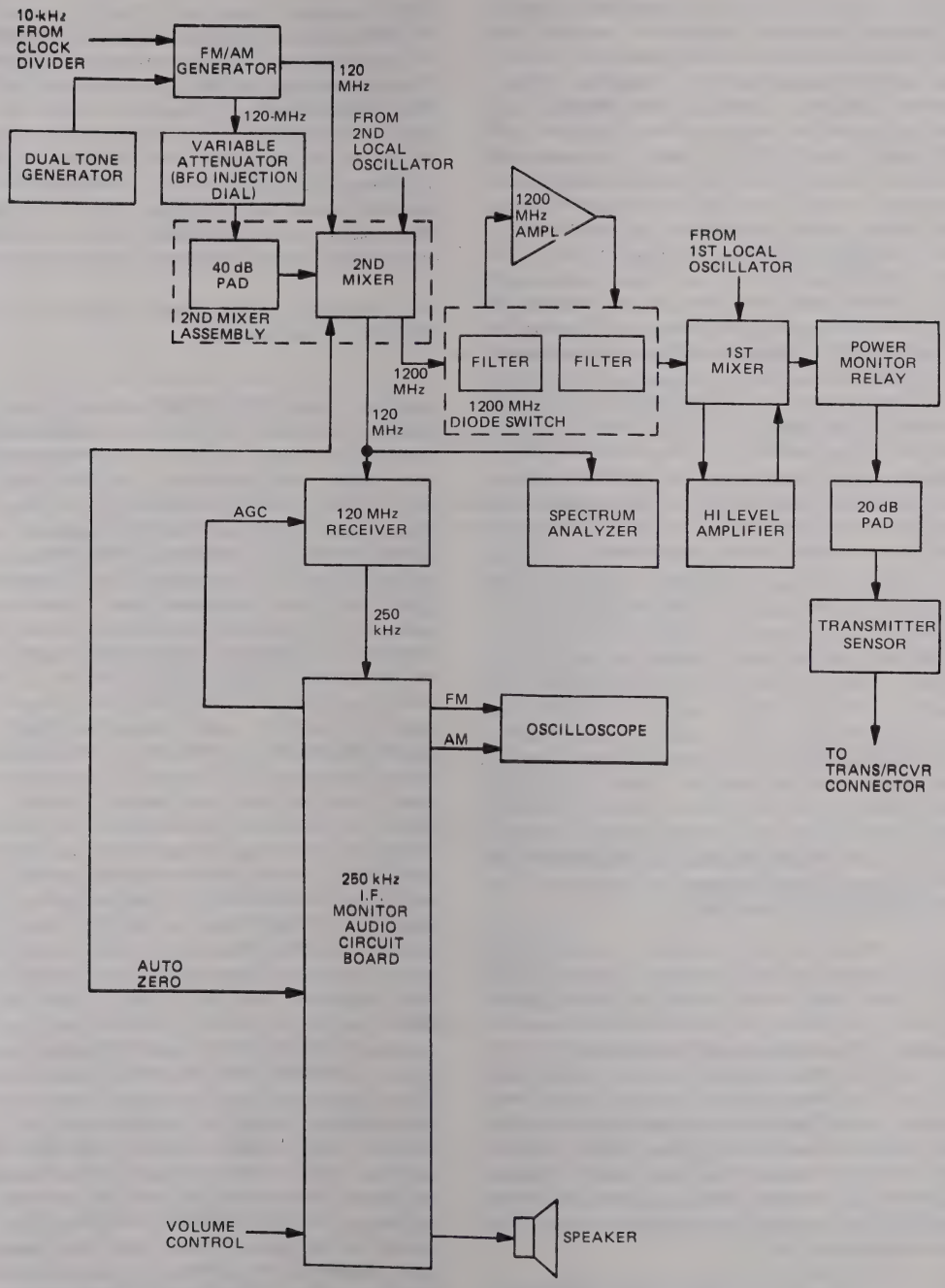

Figure 3-3. Generate block diagram

zer. From there, it follows the same path through the 120-MHz Receiver (figure 6-37) and the 250-kHz I.F. Monitor Audio Circuit Board (figure 6-21) as do received signals (refer to paragraph 3-2.a.). A second 120-MHz output of the FM/AM Generator is applied to the variable attenuator (RF LEVEL/BFO INJECTION), which is calibrated in both μV and dBm. The variable attenuator is accurate at the TRANS/RCVR port with a scaling factor which is controlled by the HI LVL/μV x 100/NORM switch. Attenuator output is applied to the 2nd Mixer where it can be attenuated by a 40-dB pad, depending on the position of the HI LVL/μV x 100/NORM switch. If the switch is in the NORM position, the 40-dB pad is selected. It is bypassed if the switch is in the μV x 100 or HI LVL position. The generate diode switch applies a 120-MHz signal to the 2nd Mixer. The 2nd Local Oscillator (refer to Figure 3-6 for a block diagram) output mixes with the 120-MHz generated signal producing a frequency of approximately 1200-MHz. The 1200-MHz I.F. is fed to the 1200-MHz Diode Switch (figure 6-24) where it is filtered, applied to the 1200-MHz Amplifier (figure 6-13) and returned to a second filter in the 1200-MHz Diode Switch. From there the 1200-MHz signal is fed to the 1st Mixer where it mixes with the output of the 1st Local Oscillator. The output of the 1st local oscillator is 1200-MHz above the setting of the three leftmost digits of the FREQUENCY MHz thumbwheels. The 1st Mixer relays are de-energized, and the signal passes through to the Power Monitor Relays (figure 6-25). The relays are energized, and the signal passes to the 20 dB pad and the Transmitter Sensor (figure 6-11). The signal is then applied to the TRANS/RCVR connector.

b. When the HI LVL/μV x 100/NORM switch is in the HI LVL position, power is applied to the High Level Amplifier (figure 6-42). The signal path up to the 1st Mixer is the same as for generate operation (refer to paragraph 3-3.a). The 1st Mixer relays energize, and the signal goes from the 1st Mixer circuit to the High Level Amplifier. Amplified output is sent back to the1st Mixer Assembly and through the relays. It then follows the path through the Power Monitor relays, the 20 dB pad, and the Transmitter Sensor to the TRANS/RCVR connector as in generate operation (refer to paragraph 3-3.a).

c. The beat frequency oscillator (BFO) is active only when the GEN/RCVR switch is in the RCVR position. When the BFO/OFF switch is in the BFO position, the FM/AM generator generates a 120-MHz signal. The signal is applied to the 2nd Mixer through the variable attenuator (RF LEVEL/BFO INJECTION). If the HI LVL/μV x 100/NORM switch is in the NORM position, the 40 dB pad in the 2nd Mixer is selected. It is bypassed if the switch is in the μV x 100 position. The BFO coupling mixes the generated signal with the received signal. The signal then follows the path out of the 2nd Mixer described in paragraph 3-2.a.

3-4. Frequency Error Theory. (Refer to figure 3-4 for a block diagram.)

a. The AUTO/OFF/ZERO, BATT switch must be in the AUO ZERO position (upper position) in order for Frequency Error Measurements to be taken. When it is in the AUTO ZERO position, errors caused by drift of the 109.3 MHz crystal oscillator (3rd local oscillator) or the 10.95 MHz crystal oscillator (4th local oscillator) in the 120-MHz Receiver (figure 6-37) and offset errors in the 250 kHz I.F. Monitor Audio Circuit Board (figure 6-21) are corrected. These corrections are made at the Frequency Error Meter Driver on the 250 kHz I.F. Monitor Audio Circuit Board. When the AUTO/OFF/ZERO, BATT switch is in the AUTO position, an auto zero pulse is produced every 1.5 seconds, with a 3-ms "on time". This pulse is applied to the 250 kHz I.F. Monitor Audio Circuit Board and 2nd Mixer (figure 6-33). This pulse turns off the 2nd Mixer Receive Diode Switch, the Generate Diode Switch, the Generate Crossfeed Diode Switch and turns on the Auto Zero Diode Switch. It also disables the AGC system in the 250 kHz I.F. Monitor Audio Circuit Board. The 10-MHz input to the 2nd Mixer Diode Switch Assembly from the TCXO Output Distribution Amplifier (figure 6-10) is multiplied to 120 MHz. The Auto Zero Diode Switch feeds this 120-MHz signal to the 120 MHz Receiver and Spectrum Analyzer. The 120-MHz Auto Zero signal is mixed in the 120-MHz Receiver with a signal from the 109.3 MHz crystal oscillator (3rd local oscillator). The difference signal of approximately 10.7-MHz is mixed with a signal from a 10.95 MHz crystal oscillator. The difference signal, which incorporates errors due to drift of the 3rd and 4th local oscillators, is approximately 250 kHz. This signal is fed to the discriminator and the Frequency Error Meter Driver Circuit on the 250-kHz I.F. Monitor Audio Circuit Board. During the AUTO ZERO pulse, the output of the Frequency Error

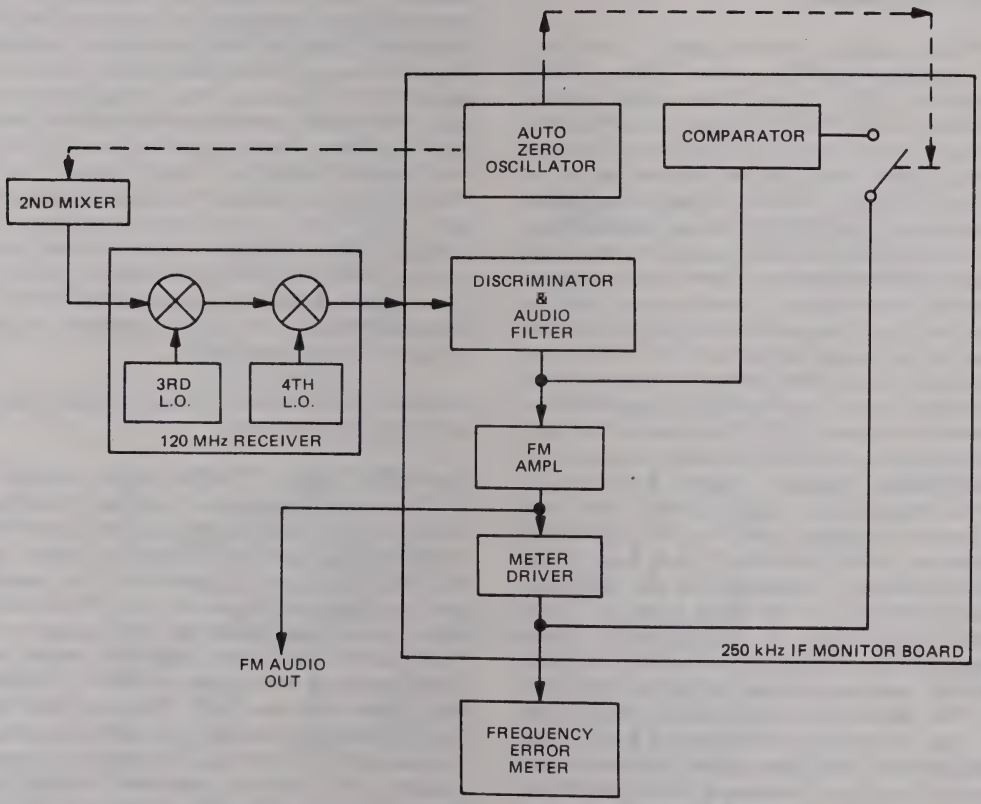

Figure 3-4. Frequency error, block diagram

Meter Driver Circuit is fed to a comparator. The output of the comparator sums with the output of the discriminator. This sum signal zeroes the Frequency Error Meter Driver output of the comparator and the FREQ. ERROR (KHz) meter. After the AUTO ZERO pulse, there is a 0.5 ms delay until the meter circuits are activated. This gives the system time to re-establish the original signal.

3-5. 1st Local Oscillator Theory. (Refer to figure 3-5 for a block diagram.)

The TCXO applies a 10-MHz signal to the 100-MHz Amplifier/108-MHz Mixer (figure 6-36) through the TCXO Output Distribution Amplifier (figure 6-10). The 100-MHz Amplifier/108-MHz Mixer selects the fifth harmonic of 10-MHz, amplifies it and multiplies the 50-MHz signal by two. The resulting 100-MHz signal is amplified and applied to the 100-MHz Filter (figure 6-34). The 100-MHz signal is then applied to the High Frequency Multiplier/Mixer (figure 6-40), where it is amplified, then applied to the five tuned cavities within the High Frequency Multiplier/Mixer. The outputs of the tuned cavities are selected by the VCO Tuner (figure 6-19), which is controlled by the leftmost digit of the FREQUENCY MHz thumbwheels (figure 6-41). The value of the leftmost digit also selects the frequency range of the 1200-2200-MHz Oscillator (figure 6-7) through the VCO Tuner. If the digit is 0 or 1, the 1100-MHz cavity is selected, and the 1200-2200-MHz Oscillator is 1200-1399-MHz. If it is 2 or 3, the 1300-MHz cavity is selected, and the Oscillator is 1400-1599-MHz. If the digit is 4 or 5, the 1500-MHz cavity and the 1600-1799-MHz range are selected. The 1700-MHz cavity and the 1800-1999-MHz range are selected when the digit is 6 or 7. The 1900-MHz cavity and the 2000-2199-MHz range are selected if the digit is 8 or 9. The 1200-2200-MHz Oscillator applies its selected frequency to the High Frequency Mutliplier/Mixer, where it is mixed with the frequency of the selected tuned cavity to produce a signal from 100 to 299-MHz. This signal is applied to the Heterodyne Amplifier ÷2 Prescaler (figure 6-6), which divides it into an output signal between 50 and 149.5-MHz. This signal is applied to the High Frequency Phase Lock (figure 6-17), and is divided in a programmable divider circuit by a number between 100 and 299, which is selected by the first three digits (100, 10 and 1-MHz) of the FREQUENCY MHz thumbwheels. The resulting frequency provides one input to the phase detector circuit. The TCXO, through the TCXO Output Distribution Amplifier, applies a 10-MHz signal to the reference circuit of the High Frequency Phase Lock. This 10-MHz signal is divided by twenty, and provides a 500-kHz reference for the phase detector. If a frequency/phase difference is detected between the programmable divider circuit and the 500-kHz reference, the resultant difference signal (a dc level) is applied to the VCO Tuner which in turn slews the 1200-2200 MHz VCO frequency as necessary until the output of the programmable divider settles at 500-kHz. At this point, the High Frequency Phase lock loop is locked on frequency (High Frequency Multiplier/Mixer, Heterodyne Amplifier ÷2 Prescaler, High Frequency Phase Lock, VCO Tuner, and 1200-2200-MHz Oscillator). The VCO Tuner also applies a fast tune line to the AGC System (figure 6-8), which applies it to the 1200-2200-MHz Oscillator to provide controlled gain of the loop at the selected frequency. The 1200-2200-MHz Oscillator applies a signal, which is the output of the 1st local oscillator, to the 1st Mixer (figure 6-32). An indication that the High Frequency Phase Lock loop is operating properly is that the left lock lamp is lit.

3-6. 2nd Local Oscillator Theory. (Refer to figure 3-6 for a block diagram.)

The TXCO sends a 10-MHz signal through the TCXO Output Distribution Amplifier (figure 6-10) to the Clock Divider (figure 6-9). The Clock Divider reduces the signal to 100-Hz and applies it to the 79-80 MHz Loop (figure 6-18). The value of the four rightmost digits of the FREQUENCY MHz thumbwheels determine the output of the 79-80 MHz Loop. The frequency varies from 7.90001-MHz if the digits are 9999 to 8.00000-MHz if the digits are 0000. When the 79-80 MHz Loop is operating properly, the right lock lamp on the front panel will be lit. The output frequency is applied to the 100-MHz Amplifier/108-MHz Mixer (figure 6-36), which mixes the signal with 100-MHz. The output signal, which is between 107.90001-MHz and 108.00000-MHz, is applied to the 108-MHz Bandpass Filter (figure 6-12), then to the 1080-MHz Multiplier Amplifier (figure 6-23), where it is multiplied by ten. The resulting signal, 1079.0001-MHz to 1080.0000-MHz, is the output of the 2nd local oscillator. It is applied to 2nd Mixer (figure 6-33).

3-7. Dual Tone Generator Theory. (Refer to figure 3-7 for a block diagram.)

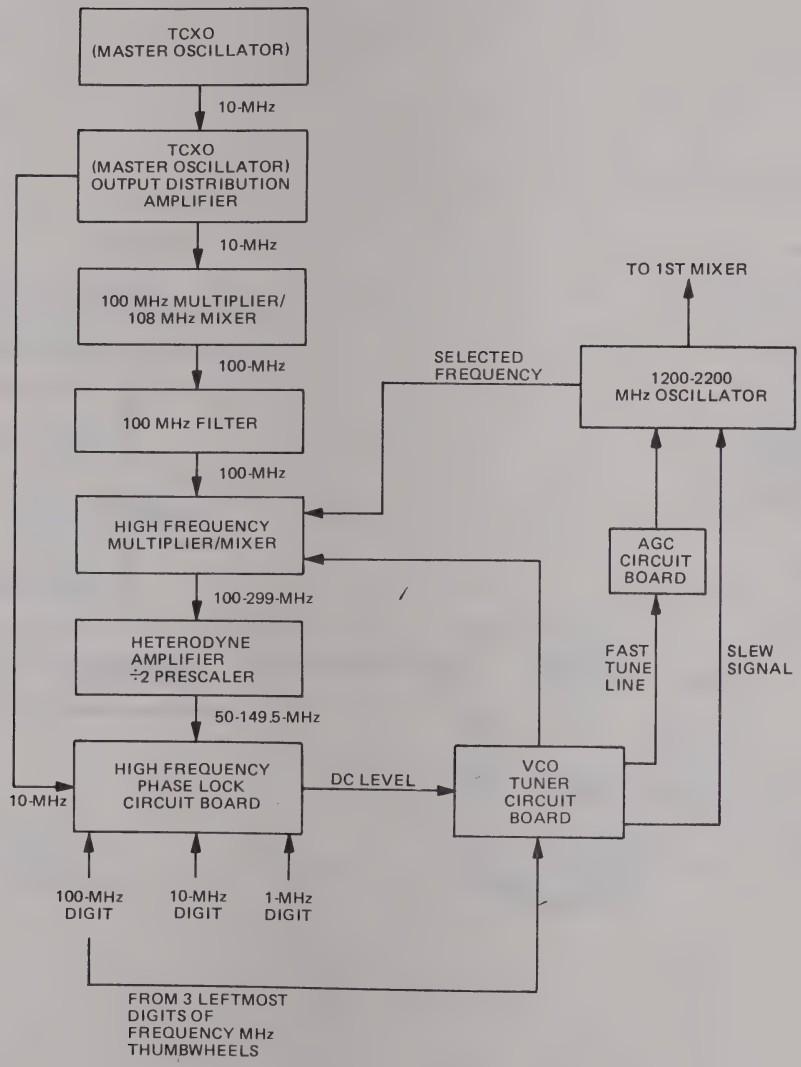

Figure 3-5. 1st local oscillator block diagram

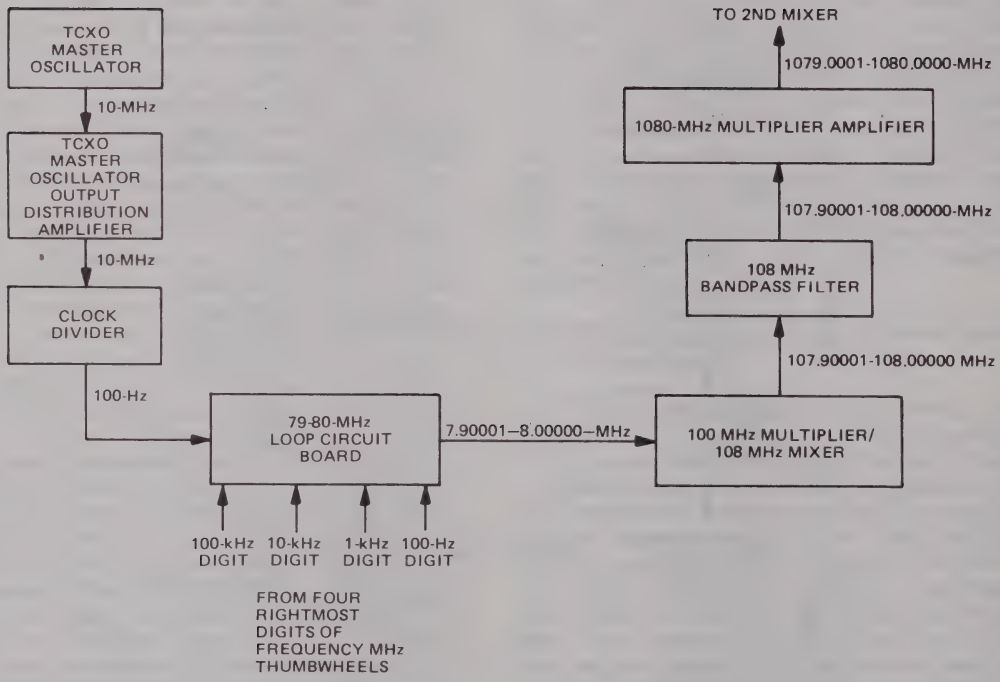

Figure 3-6. 2nd local oscillator block diagram

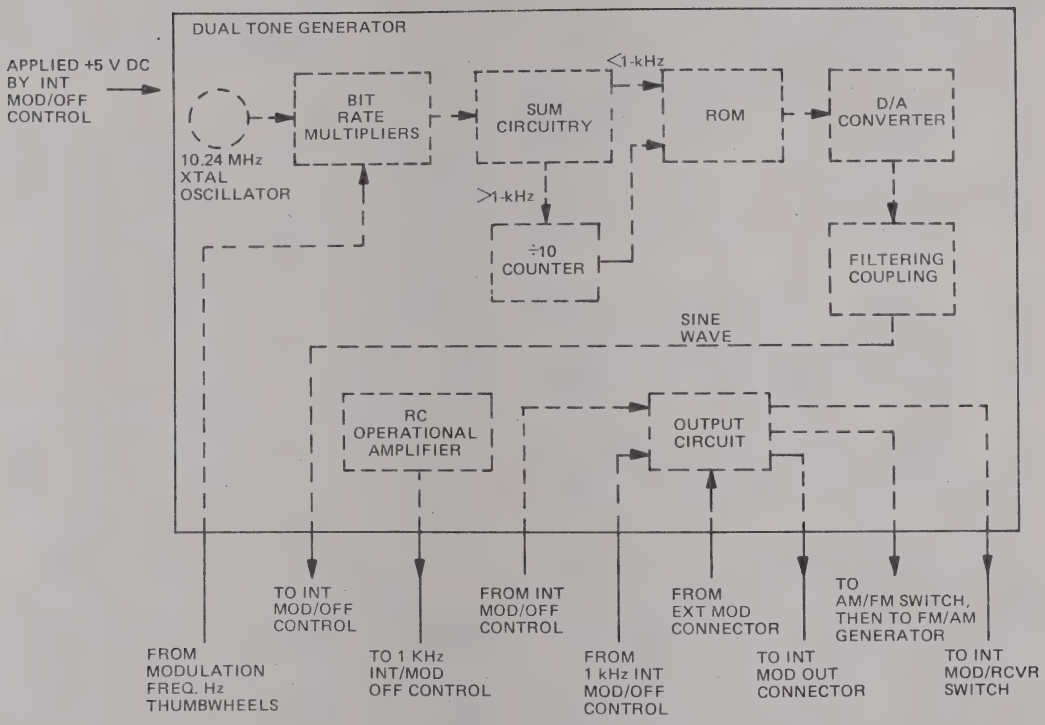

Figure 3-7. Dual tone generator block diagram

a. The INT MOD/OFF control applies power (+5 V dc) to the variable tone circuits. The MODULATION FREQ. Hz thumbwheels control the frequency, which is digitally selected, and crystal controlled. The ouput of a 10.24 MHz crystal oscillator is applied to bit rate multipliers which are controlled by the setting of the MODULATION FREQ. Hz thumbwheels. The output of the bit rate multipliers is summed. If it is greater than 1-kHz, it is sent to a ÷10 counter, then to a Read Only Memory (ROM). If it is less than 1-kHz, it is sent directly to the ROM. It is then applied to a Digital/Analog (D/A) converter, where it is converted to a frequency based on output from the ROM. The output signal from the D/A converter is filtered and ac coupled into a sine wave. This signal is applied to the INT MOD/OFF control on the front panel. The INT MOD/OFF control potentiometer (POT) varies the output level. The tone generator can be keyed off by inserting a phone jack into the EXT MOD connector.

b. The fixed tone generator is a resistor capacitor (RC) operational amplifier oscillator which adjusts the frequency to approximately 1 kHz. The signal is applied to the 1-kHz INT MOD/OFF control, which controls the amplitude.

c. If there is an external modulation input at the EXT MOD connector, it is presented for summation in the Dual Tone Generator Assembly (figure 6-20).

d. In the output circuit of the Dual Tone Generator, the fixed tone, the variable tone, and input at the EXT MOD connector are summed. The summed signal is applied to an output buffer-amplifier. The amplified signal is applied to the INT MOD OUT connector, to the AM/FM switch, which applies it to the FM/AM Generator (figure 6-38), and to the INT MOD position of the INT MOD/RCVR switch. This switch couples the signal to the VOL control, and the VOL control feeds the 250-kHz I.F. Monitor Audio Circuit Board (figure 6-21), which applies an audio signal to the speaker.

3-8. Oscilloscope Theory. (Refer to figure 3-8 for a block diagram.)

a. To operate the oscilloscope, the ANALY DISPR control must be turned fully ccw, in detent. When the control is in this position, the Spectrum Analyzer is off, and the Oscilloscope is on. The AC/OFF/DC switch must be in either the AC or DC position. These two positions allow +12 V to the Oscilloscope Inverter Circuit Board (figure 6-28).

b. The Inverter Circuit Board is the power supply for the crt. It uses the +12 V allowed by the AC/OFF/DC switch as a source for the switching regulator: —2000 V dc is developed for the crt cathode, and +200 V dc is developed for the horizontal and vertical deflection plates of the crt. The crt heater voltage is also developed. The Inverter Board sends signals to the CRT for blanking of the retrace, and it also controls the intensity and focus of the crt trace.

c. Vertical inputs to the crt are derived by the Oscilloscope Main Circuit Board (figure 6-30) from either the input to the SCOPE IN connector, or from the 15/6/1.5 KHz positions of the EXT V/DIV control. For internal modulation, AM modulation is applied to the Main Circuit Board from the 250-kHz Intermediate Frequency on the 250-kHz I.F. Monitor Audio Circuit Board (figure 6-21), and frequency deviation is applied to the Main Circuit Board from the FM audio output of the 250-kHz I.F. Monitor Audio Circuit Board. When using the oscilloscope as a general purpose test instrument to measure external inputs applied through the SCOPE IN connector, the EXT V/DIV Control must be in the .01 V/DIV, .1 V/DIV, 1 V/DIV, or 10 V/DIV position. The EXT V/DIV vernier control reduces the signal amplitude when it is not in the CAL position. The Main Circuit Board applies the signals derived from either the SCOPE IN connector or the 15/6/1.5 KHz positions of the EXT V/DIV control to the crt to control the vertical position of the trace. These inputs to the crt are either ac or dc coupled. The VERT control adjusts the vertical position of the crt trace.

d. Horizontal inputs to the crt derived from the internal sweep, according to the position of the SWEEP control. The internal sweep comes from the internal sweep generator on the Main Circuit Board. When the SWEEP control is fully ccw, the sweep frequency equals the tone generator output frequency, and the length of the sweep is controlled by the amplitude of the tone generator output. The SWEEP vernier control increases the number of pulses displayed when it is not in the CAL position. The HORIZ control adjusts the horizontal position of the crt trace.

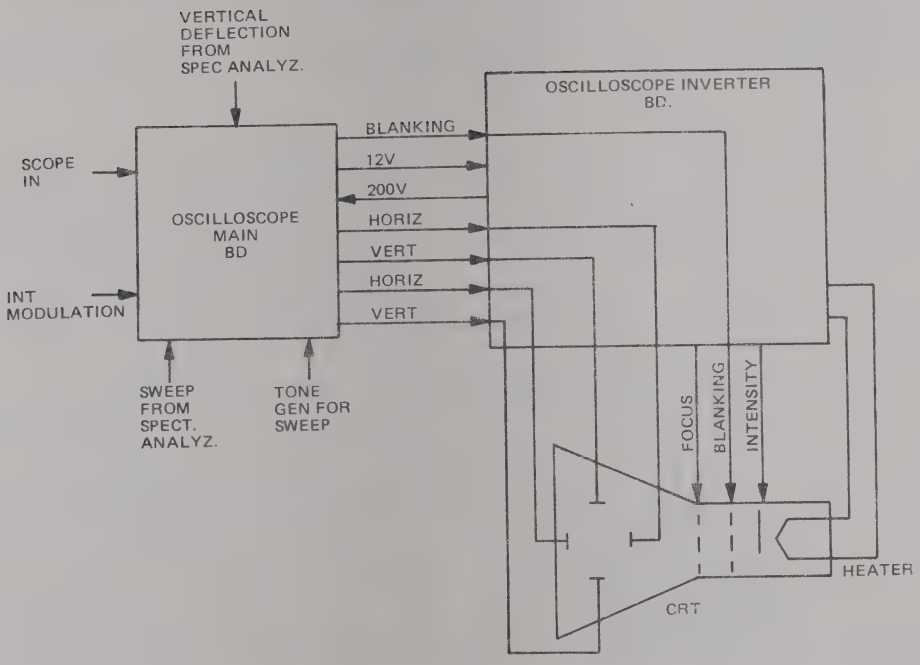

Figure 3-8. Oscilloscope block diagram

3-9. Spectrum Analyzer Theory. (Refer to figure 3-9 for a block diagram of Spectrum Analyzer Circuit Board 1, and to Figure 3-10 for a block diagram of Spectrum Analyzer Circuit Board 2.)

a. To turn the Spectrum Analyzer on, the AC/OFF/DC switch must be in either the AC or DC position. This applies power (+12 V) to the Oscilloscope Inverter Circuit Board (figure 6-28). The ANALY DISPR control must be out of the fully ccw, or detent position. When it is out of detent, the Oscilloscope inputs to the horizontal and vertical deflection plates of the crt are disabled, the Spectrum Analyzer inputs to the horizontal and vertical deflection plates are enabled, and the HORIZ and VERT controls are disabled.

b. Amplitude is displayed by the Spectrum Analyzer in the following manner. Spectrum Analyzer Module No. 1 (figure 6-27) receives a 120-MHz input from the 2nd Mixer (figure 6-33). The signal is amplified and filtered, then mixed with the swept frequency of a Voltage Controlled Oscillator (V.C.O.) which has a center frequency of 145-MHz. The resulting 25-MHz signal is filtered by a 25-MHz crystal filter, which has a bandpass of 30 kHz. The 25-MHz signal then mixes with a signal from a 26-MHz crystal oscillator. This produces a 1-MHz signal which is applied to the logarithmic (log) amplifier on Spectrum Analyzer Module No. 2 (figure 6-29). Output of the log amplifier is applied to a detector, and output of the detector is applied to the Spectrum Analyzer input of the vertical deflection amplifier on the Oscilloscope Main Circuit Board (figure 6-30). A signal is then applied from the Main Circuit Board to the Inverter Circuit Board, then to the vertical deflection plates of the crt to display the amplitude.

c. Frequency is displayed on the Spectrum Analyzer in the following manner. An 18-Hz sawtooth signal produced on Spectrum Analyzer Module No. 1 is the crt sweep signal. It is applied to the varactor tune circuit on Spectrum Analyzer Module No. 1. The varactor tune voltage is controlled by the ANALY DISPR control. When the ANALY DISPR control is turned ccw, but short of detent, dispersion is minimum, and the varactor causes the V.C.O. to sweep from 145.5-MHz to 144.5-MHz at an 18-Hz rate. When the ANALY DISPR control is fully cw, dispersion is maximum and the varactor causes the V.C.O. to sweep from 150-MHz to 140-MHz at an 18-Hz rate. The sweeping V.C.O. allows signals to be viewed during minimum dispersion which are ±500-kHz from the frequency of the FREQUENCY MHz thumbwheels. During maximum dispersion, signals may be viewed which are ±5 MHz from the frequency of the FREQUENCY MHz thumbwheels. The V.C.O. is phase locked to the 5.12 MHz crystal oscillator on Module No. 2 to keep the center frequency at 145-MHz.

3-10. MM-100 (Multimeter) Theory. (Refer to figure 3-11 for a block diagram.)

a. The MM-100 is powered by +12 V dc through its accessory cable at the EXT ACC connector.

b. Measurements of AM% of modulation use a modulation frequency of 1-kHz. AM% of modulation information is derived from demodulated output from the AN/GRM-114. Demodulated input to the MM-100 is transformer coupled for isolation. Then it is applied to a peak detector, and a corresponding dc voltage is applied to the meter driver. The AM% of modulation is read on the top scale (0-100%) of the meter.

c. When measuring ohms, the x1 position of the probe is recommended, because there is less than 1Ω from the tip of the probe to the probe output connector. The FUNCTION control must be in the OHMS (only) position. The RANGE control may be in any of the five OHMS positions (x1 through x10k). The meter indication is read on the bottom scale (OHMS). The fuse protects the OHMS function only. 1 V dc is present at the INPUT connector. An operational amplifier feedback system provides accurate center scale reading.

d. The DC — position of the FUNCTION control allows negative dc voltages to be measured. This position reverses the polarity of the INPUT connector by switching the center conductor to meter ground and switching the shield to an input amplifier. DC is applied to the meter driver through the loading resistors selected by the position of the RANGE switch (.1-300 V, full scale). Maximum input is —300 V dc, either directly or with the probe in the x1 position. Maximum input is —800 V dc using the probe in the x10 position. DC — voltages are read on the top or second scale, depending on the value of full scale deflection, as determined by the position of the RANGE control.

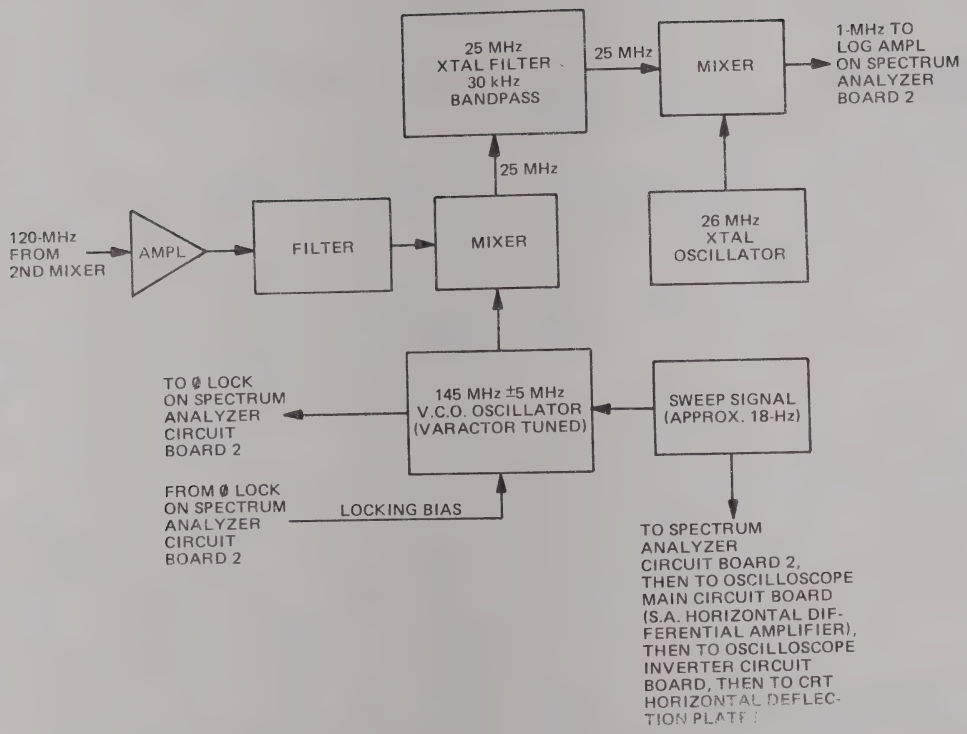

Figure 3-9. Spectrum analyzer circuit board 1 block diagram

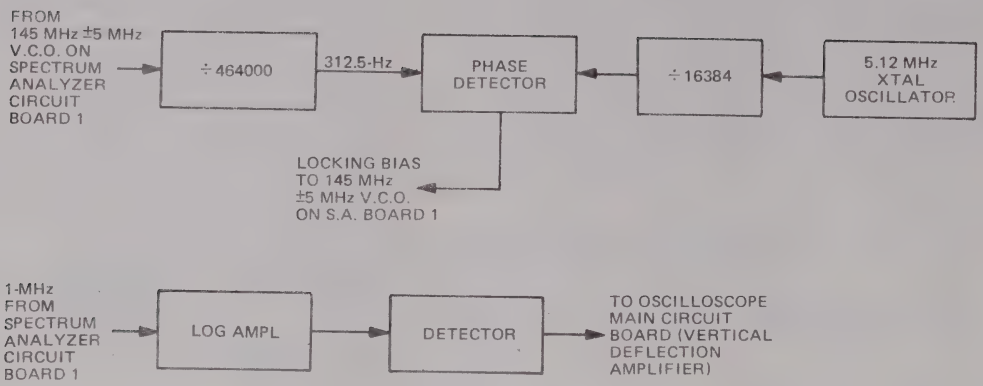

Figure 3-10. Spectrum analyzer circuit board 2 block diagram

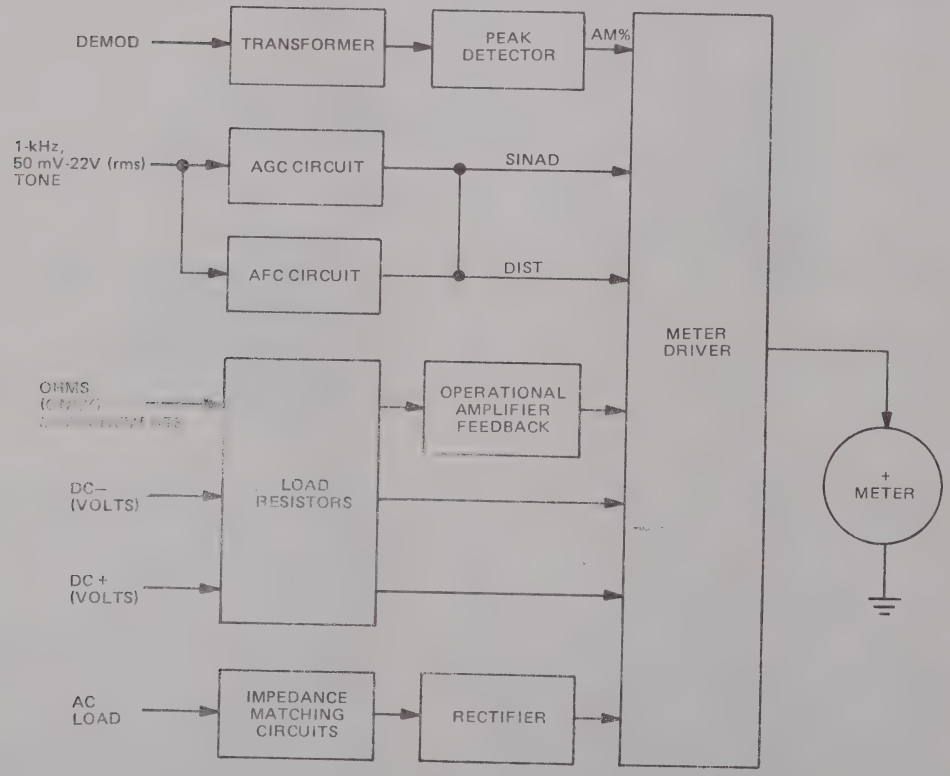

Figure 3-11. MM-100 (Multimeter) block diagram

e. When the FUNCTION control is in the DC+ position, positive dc voltage is measured. The polarity of the INPUT connector is normal, because the center conductor of the INPUT connector is switched to the input amplifier, and the shield is switched to meter ground. DC is applied to the meter driver through loading resistors selected by the position of the RANGE control (.1V-300V, full scale). Maximum input is 300 V dc, either directly, or with the probe in the x1 position. Maximum input is 800 V dc using the probe in the x10 position. DC+ voltages are read on the top or second scale depending on the value of full scale deflection, as determined by the setting of the RANGE control.

f. Input loading for ac voltages occurs through impedance matching circuits. There are five different AC LOAD positions for these circuits, HI-Z (1 MΩ) — 3.2Ω. The position of the RANGE control selects the range of full scale deflection (.1V - 300V). For direct input, 300 V ac is maximum input. 600 V ac is maximum input using the probe in the x10 position. The frequency range is 25-Hz to 25-kHz with the probe. Input ac voltages are rectified and passed to the meter driver. The dB scale (red scale) is provided for ac reference measurements.

g. When the RANGE control is in the SINAD position, the SINAD scale (blue scale), is calibrated in dB below 100% distortion. The FUNCTION control should be in the AC LOAD positions as required. SINAD measurements use a 1-kHz tone, 50 mV-22V (rms). Internal AGC and AFC circuits allow measurements to be made without level or frequency settings.

h. For the DIST (distortion) positions of the RANGE control, 0-10% is read on the top scale, and 0-30% is read on the 0 to 3 scale. Distortion measurements use a 1-kHz, 50-mV -22V (rms) tone only. Internal AGC and AFC circuits allow measurements to be made without level or frequency settings.

3-11. Power Supply Theory. (Refer to figure 3-12 for a block diagram.)

a. Power may be supplied to the AN/GRM-114 from the battery, from an external dc source, or from an external ac source. When operating on battery voltage, 12 V is applied from the battery to the Duty Cycle Regulator (figure 6-16) through the battery fuse. For operation on an external dc voltage, +11 to +28 V dc is applied to the Duty Cycle Regulator through the external dc fuse. For operating on an ac voltage, the ac voltage is connected to the transformer through a fuse on the Rear Panel. The transformer steps down the ac input voltage to 9 V ac. This voltage is rectified by two bridge rectifiers. Unregulated dc voltage is fed to the Duty Cycle Regulator. When operating on an external ac or dc voltage, rectified ac or external dc is applied to the PWR/OFF/BATT switch. When the switch is in the PWR position, voltage is applied through the normally closed contacts of the Duty Cycle Regulator relay to the Duty Cycle Regulator circuits. To operate on battery, the PWR/OFF/BATT Switch is depressed to the momentary BATT position. This sends a signal to the Regulator and Power Supply Circuit Board (figure 6-22) which energizes the Duty Cycle Regulator relay allowing battery voltage to be presented to the Duty Cycle Regulator circuits. To remove battery power, the PWR/OFF/BATT Switch is again depressed to the momentary battery position.

b. The Duty Cycle Regulator develops +5, +12 and —39 V dc regulated outputs from the source voltage. The +5 V dc output is used in logic circuits. The +12 V dc output is fed to the Oscilloscope Main Circuit Board (figure 6-30) and the Regulator and Power Supply Circuit Board. The —39 V dc output is fed to the Regulator and Power Supply Circuit Board. The Duty Cycle Regulator also provides a battery charging circuit. This circuit, which provides 15 V dc, operates only on an external voltage.

c. The Regulator and Power Supply Circuit Board receives inputs from the Duty Cycle Regulator. The Circuit Board develops +11, —12, and —35 V dc outputs for operation of circuit boards and mechanical assemblies. These voltages are current limited to prevent damage to the regulator circuits. The Circuit Board also contains a battery timer circuit, which turns the test set off after six to ten minutes of battery operation, and a low voltage cutoff circuit which prevents battery operation of the test set when the battery voltage is below 11 volts. The Circuit Board converts RF signals detected by the Power Monitor (figure 6-25) into dc voltages which are sent to the DEVIATION (KHz)/WATTS meter for power measurements. It also switches the AN/GRM-114 between the generate and receive modes.

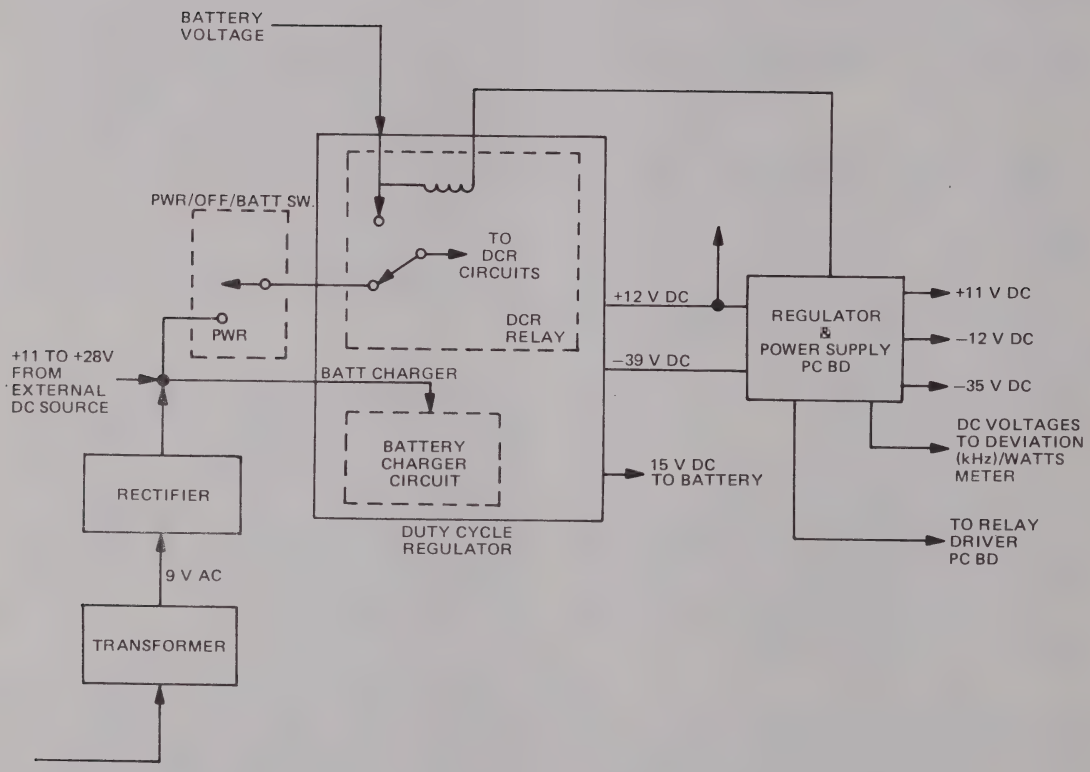

Figure 3-12. Power supply block diagram

CHAPTER 4

OPERATING INSTRUCTIONS

CAUTION

A transmitter must only be connected to the TRANS/RCVR connector on the front panel of the AN/GRM-114. Connecting a transmitter to any other connector will severely damage the AN/GRM-114.

4-1. Operating Procedures. Observe the following precautions when operating the AN/GRM-114:

a. When working with "live" circuits of high potential, keep one hand in pocket or behind back to avoid serious shock hazard.

b. Remove all jewelry or other cosmetic apparel before performing any test procedures involving "live" circuits.

c. Use only insulated troubleshooting tools when working with "live" circuits.

d. For added insulation, place rubber bench mat underneath all powered bench equipment, as well as a rubber floor mat underneath operator chair.

e. Heed all WARNINGS and CAUTIONS concerning maximum voltage and power inputs.

f. When operating AN/GRM-114 in conjunction with a unit under test (UUT), apply power in following sequence:

(1) The device receiving an input is energized first.

(2) The device generating an output is energized second.

g. Avoid using oscilloscope/spectrm analyzer in direct sunlight as scope trace is dfficult to see under these conditions.

h. Do not allow scope trace to become concentrated on CRT as a stationary spot, as CRT screen may be burned permanently. Reduce trace intensity if trace must remain stationary.

i. Protect AN/GRM-114 from vibration or mechanical shock. The CRT is highly evacuated and if broken, will implode, causing possible serious injury from fragmented glass.

4-2. AN/GRM-114 Controls, Indicators, and Connectors. Table 4-1 lists the controls, indicators, and connectors (figure 4-1) of the AN/GRM-114.

Table 4-1. AN/GRM-114 Controls, Indicators, and Connectors

Control, indicator, or connector	Function
DEVIATION (KHz)/WATTS meter	Provides visual display of peak FM deviation, transmitter output power, received signal strength, and internal battery charge condition.
0 dBm lamp	Lights when rf signal output is at 0 dBm or above.
HI LVL/μV x 100/NORM switch	3-position switch which selects power range for RF LEVEL/BFO INJECTION dial as follows: NORM position - RF/BFO output level is equal to setting of RF LEVEL/BFO INJECTION dial on μV (microvolts) or dBm (decibels referenced to 1 milliwatt) scale.

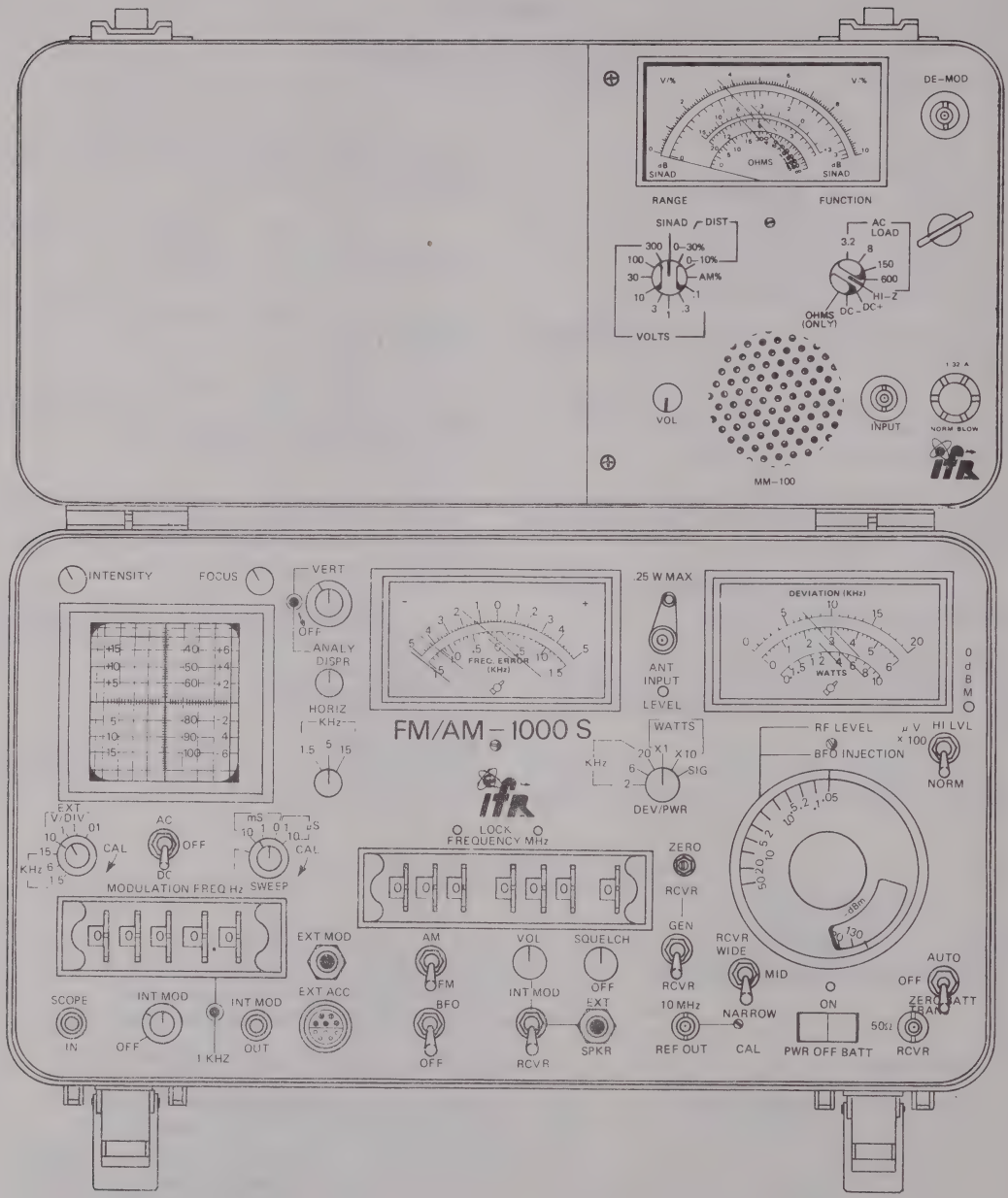

Figure 4-1. AN/GRM-114 controls, indicators, and connectors

Table 4-1. AN/GRM-114 Controls, Indicators, and Connectors — Continued

Control, indicator, or connector	Function
HI LVL/μV x 100/NORM switch — Continued	μV x 100 position - RF/BFO output level is 100 times the RF LEVEL/ BFO INJECTION dial setting on the μV scale. (Equivalent level in dBm is equal to reading of dBm scale, plus 40 dB.) HI LVL position - Enables RF output levels above —35 dBm to be achieved.
ZERO RCVR adjustment	Adjustment screw for zeroing FREQ. ERROR meter when power is ON.
RF LEVEL/BFO INJECTION dial	Controls RF output level when set is operating in signal GEN mode and beat frequency oscillator (bfo) injection level when operating in RCVR mode. Control knob contains scales for levels in both μV and dBm (decibels referenced to 1 milliwatt).
AUTO/OFF/ZERO, BATT switch	3-position switch which activates/deactivates auto-zeroing circuit and provides a visual indication of internal battery voltage condition as follows: AUTO position - Auto-zeroing circuit is activated, automatically zeroing receiver and FREQ. ERROR meter through an internal self-check. OFF position - Auto-zeroing circuit is deactivated. ZERO, BATT position - When switch is held in this springloaded position, a visual indication of internal battery voltage is displayed on DEVIATION (KHz)/ WATTS meter BATT (green) scale.

Table 4-1. AN/GRM-114 Controls, Indicators, and Connectors — Continued

Control, indicator, or connector	Function
AUTO/OFF/ZERO, BATT switch — Continued	NOTE AN/GRM-114 should not be used as test set when switch is in this position. When activated, auto-zeroing reference pulse will cause minor cathode ray tube (crt) trace and meter needle deflections to occur; this is a normal operating condition and should be disregarded. With auto-zeroing circuit activated, a 3-ms void will be produced by reference pulse every 1.5 seconds in generate or receive modes. If this conditions hinders testing of unit under test (UUT), place switch to OFF position. In OFF position, FREQ. ERROR meter is not calibrated and should not be used for frequency error measurements.
TRANS/RCVR connector	50Ω rf input/output connector for UUT.
ON lamp	Lights when power is applied.
PWR/OFF/BATT switch	3-position switch which supplies/interrupts power as follows: PWR (leftmost position) - Allows application of external ac or dc power. OFF(center position) - Shuts off power to all circuits, except battery charger circuit. BATT (rightmost position) - Powers AN/GRM-114 by its internal battery; set will turn off automatically after approximately eight minutes of operation, to prevent battery rundown.

Table 4-1. AN/GRM-114 Controls, Indicators, and Connectors — Continued

Control, indicator, or connector	Function
PWR/OFF/BATT switch — Continued	NOTE AN/GRM-114 internal battery is charging whenever test set is connected to an ac power source, including times when power switch is OFF.
RCVR WIDE/MID/NARROW switch	Selects WIDE, MID or NARROW bandwidth of AN/GRM-114 receiver.
GEN/RCVR switch	Controls operating mode of AN/GRM-114 as a signal generator or receiver as follows: GEN position - AN/GRM-114 functions as a signal generator, producing rf output at TRANS/RCVR connector. If rf energy is applied to this connector while set is in generator mode, set will automatically switch to receiver mode. RCVR position - AN/GRM-114 functions as a receiver. Signal input (0.1 watt minimum required) may be applied through the TRANS/RCVR connector or "off-the-air" from an external antenna attached to ANT INPUT connector.
10 MHz CAL adjustment	Fine tuning adjustment for 10-MHz master oscillator frequency.
10 MHz REF OUT connector	10-MHz master oscillator output connector.
EXT SPKR connector	Audio output connector for remote speaker or headphones.
SQUELCH/OFF control	Squelch threshold adjustment; squelch disables audio output when rf input at ANT INPUT connector falls below squelch threshold.

Table 4-1. AN/GRM-114 Controls, Indicators, and Connectors — Continued

Control, indicator, or connector	Function
SQUELCH/OFF control — Continued	NOTE SQUELCH control is OFF when fully ccw in detent position. When out of detent position, rotate control cw to increase squelch threshold or ccw to decrease threshold. (The greater the squelch threshold, the greater the signal input required to break the threshold).
INT MOD/RCVR switch	Couples receiver or dual tone generator audio output to internal speaker through VOL control.
VOL control	Controls audio output level of internal speaker (or external accessory speaker when connected to EXT SPKR connector).
BFO/OFF switch	Activates or deactivates internal beat frequency oscillator (bfo).
AM/FM switch	Selects signal mode to be generated or received as follows: AM position - Generates or receives amplitude modulated (AM) signals. FM position - Generates or receives frequency modulated (FM) signals.
EXT ACC connector	Output connector providing power or signal sources for external accessory equipment. (See Appendix D for connector pin assignments).
EXT MOD connector	Input connector for external modulation sources.
INT MOD OUT connector	Output connector which couples dual tone generator audio output to external devices. Output level is controlled by INT MOD/OFF (outer control) and 1 kHz INT MOD/OFF (inner control).

Table 4-1. AN/GRM-114 Controls, Indicators, and Connectors — Continued

Control, indicator, or connector	Function
INT MOD OUT connector — Continued	NOTE Output can consist of one or any combination of following modulated signals mixed together: 1 kHz internal modulation, variable internal modulation, and external modulation.
INT MOD/OFF	Controls % of AM modulation or FM peak deviation of frequency selected on MODULATION FREQ. Hz thumbwheels. Modulation control is OFF in full ccw (detent position); when out of detent, rotate control cw to increase modulation level. NOTE Modulation frequency can be externally keyed through the EXT MOD connector.
1 KHz INT MOD/OFF control	Controls % of AM modulation or FM peak deviation for an approximate 1-kHz tone. Modulation control is OFF in full ccw (detent position); when out of detent, rotate control cw to increase modulation level.
MODULATION FREQ. Hz thumbwheels	Select internal modulation frequency produced by dual tone generator (10.0 Hz through 9999.9 Hz).
SCOPE IN connector	Vertical deflection input for oscilloscope.
SWEEP control	Controls horizontal sweep speed of oscilloscope in indicated increments per graticule division.
SWEEP vernier control	Permits continuous variation of sweep speed within any of the ranges provided by SWEEP control. In CAL position (fully cw, detent), oscilloscope horizontal graticule divisions are equal to setting of SWEEP control. NOTE Do not make time measurements with SWEEP vernier control out of CAL position.

Table 4-1. AN/GRM-114 Controls, Indicators, and Connectors — Continued

Control, indicator, or connector	Function
AC/DC/OFF switch	3-position switch which ac couples scope inputs when in AC position; dc couples scope inputs when in DC position; and disconnects power from oscilloscope/spectrum analyzer in OFF position. NOTE When switching from one coupling mode to another, pause briefly in OFF position; this ensures that scope power supply inverter will start. To conserve power during battery operation, place coupling switch to OFF when oscilloscope or spectrum analyzer is not in use.
EXT V/DIV control	Controls oscilloscope vertical sensitivity and input source applied to oscilloscope as follows: EXT V/DIV positions - Selects oscilloscope vertical sensitivity (in indicated voltage increments per graticule division) for signals applied to SCOPE IN connector. KHz positions - Oscilloscope displays frequency deviation (in FM mode) or modulation envelope (in AM mode). NOTE If EXT V/DIV control is in 15 or 1.5 KHz position, frequency deviation is read on left-hand vertical scale. If control is in 6 KHz position, frequency deviation is read on right-hand vertical scale. If viewing modulation in AM mode, the position of EXT V/DIV in the KHz range is irrelevant.

Table 4-1. AN/GRM-114 Controls, Indicators, and Connectors — Continued

Control, indicator, or connector	Function
EXT V/DIV vernier control	Permits variation of oscilloscope vertical sensitivity within any of the ranges provided by EXT V/DIV control. In CAL position (fully cw, detent), oscilloscope vertical graticule divisions are equal to setting of EXT V/DIV control. NOTE Do not make voltage measurements with EXT V/DIV vernier control out of CAL position.
FREQUENCY MHz thumbwheels	Selects frequency of signal generator or receiver. NOTE Left-hand thumbwheel selects frequency in 100-MHz steps. Right-hand thumbwheel selects frequency in 100-Hz steps.
1.5/5/15 KHz control	Selects full-scale sensitivity of FREQ. ERROR (KHz) meter.
Cathode ray tube (crt) display	Display screen for AN/GRM-114 oscilloscope or spectrum analyzer.
INTENSITY control	Controls brightness of crt trace. Rotate control ccw to decrease brightness, cw to increase brightness. NOTE Warmup time of crt is approximately 30 seconds from a cold start-up; trace display will not become visible until crt achieves warmup.
HORIZ control	Controls horizontal position of oscilloscope trace. Rotate control cw to move trace to right, ccw to move trace to left.
FOCUS control	Controls sharpness of oscilloscope trace.
VERT control	Controls vertical position of oscilloscope trace. Rotate control cw to move trace up, ccw to move trace down.

Table 4-1. AN/GRM-114 Controls, Indicators, and Connectors — Continued

Control, indicator, or connector	Function
ANALY DISP/OFF control	Continuously varies spectrum analyzer dispersion within a span of 1 to 10 MHz. Full cw rotation of control provides a dispersion of 1 MHz per major graticule division; full ccw rotation (short of detent position) provides a dispersion of 500 kHz per major graticule division. In full ccw detent position, spectrum analyzer is off and oscilloscope is on. NOTE During spectrum analyzer operation, all oscilloscope controls except INTENSITY control, FOCUS control and AC/OFF/DC switch are disabled. Spectrum analyzer can be turned off using AC/OFF/DC switch.
LOCK (left lamp)	When lit, indicates proper operation of high frequency phase lock loop. Lamp will blink momentarily when MHz segments of FREQUENCY MHz thumbwheels are increased in value or decreased in value, however lamp should remain lit at all other times when power is applied.
LOCK (right lamp)	When lit, indicates proper operation of 79-80 MHz low frequency phase lock board in AN/GRM-114. Lamp will blink momentarily when kHz and Hz segments of FREQUENCY MHz thumbwheels are increased or decreased in value; however, lamp should remain lit at all other times when power is applied.
FREQ. ERROR (KHz) meter	Provides visual display of difference between received signal frequency and AN/GRM-114 receiver frequency (as represented by FREQUENCY MHz thumbwheel setting).
FREQ. ERROR (KHz) zero adjustment (located below meter)	Mechanical zero adjustment of FREQ. ERROR (KHz) meter intended for use when power is off.
ANT INPUT LEVEL lamp	External antenna input to AN/GRM-114, used primarily for off-the-air testing.
LEVEL lamp	When lit, indicates that input level at ANT INPUT connector is above the squelch threshold of AN/GRM-114 receiver.

Table 4-1. AN/GRM-114 Controls, Indicators, and Connectors — Continued

Control, indicator, or connector	Function
DEV/PWR control	Provides visual display of peak FM frequency deviation, input power at TRANS/RCVR and received signal strength as follows: KHz positions - Selects full scale range for peak FM deviation as displayed by DEVIATION (KHz)/WATTS meter. WATTS positions - Selects multiplier for output power measurements on WATTS scale of DEVIATION (KHz)/WATTS meter. SIG position - For signals received off the air, representation of relative signal strength can be determined by observing DEVIATION (KHz)/ WATTS meter needle deflection. As signal strength increases, the meter needle deflection will increase towards right of meter scale.
DEVIATION (KHz)/WATTS meter, zero adjustment (located below meter)	Mechanical zero adjustment of DEVIATION (KHz)/ WATTS meter intended for use when power is off.
NOTE The following controls and indicators are located on the MM-100.	
Meter indicator	Provides visual display of external ac voltage, external dc voltage, peak AM% modulation % distortion of received, generated signal, and external resistance.
NOTE All signals indicated on the Meter require connection to the INPUT jack except AM% modulation, which is an internal connection.	
DE-MOD connector	Provides a demodulated signal from an rf input signal, that is read on meter when DE-MOD jack is connected to INPUT jack.

Table 4-1. AN/GRM-114 Controls, Indicators, and Connectors — Continued

Control, indicator, or connector	Function
FUNCTION control	AC LOAD positions - Provides ac resistance in amounts listed. DC positions - Provides high impedance dc input. OHMS (only) position - For use when measuring resistance.
INPUT connector	Input connector for MM-100 probe or test cable.
VOL control	Controls audio output of MM-100 internal speaker.
RANGE control	Controls meter display as follows: VOLTS positions - When FUNCTION control is in DC positions, value of VOLTS position represents full scale meter deflection for dc voltage. When FUNCTION control is in AC positions, value of VOLTS position represents full scale meter deflection for ac voltage. OHMS position - When FUNCTION control is in OHMS (only) position, measured resistance equals value of OHMS scale (on meter) times value of OHMS position (on RANGE control). AM% position - Peak AM% modulation is displayed on top scale of meter.

Table 4-1. AN/GRM-114 Controls, Indicators, and Connectors — Continued

Control, indicator, or connector	Function
RANGE control — Continued	DIST positions - Top or second scale of meter (depending on value of position) displays % distortion. SINAD position - Meter indicates value of signal, noise, and distortion on SINAD scale. NOTE DIST and SINAD positions are intended for use at 1 kHz only.

4-3. Operating Procedures. Table 4-2 lists start-up procedures, emergency operating procedures, and stopping procedures for the AN/GRM-114.

4-4. RF Signal Generator Operating Instructions. Table 4-3 lists the initial adjustments and control settings (figure 4-2) necessary to generate rf signals. Table 4-4 lists the operating instructions. Refer to table 4-5 for operating instructions for AM signals and refer to table 4-6 for operating instructions for FM signals.

Table 4-2. AN/GRM-114 Operating Procedures

Condition	Procedure
Startup	a. For battery operation, set PWR/OFF/BATT switch on front panel to BATT. NOTE Battery will operate for 40 minutes before requiring recharging if oscilloscope is being used, and for 1 hour if it is not. Battery may be recharged from external ac power source while source powers AN/GRM-114. Whether oscilloscope is being used or not, AN/GRM-114 will shut off every 6-10 minutes. When it does, immediately set PWR/OFF/BATT switch to BATT position. Power will return to unit. For operating from external ac or dc power source, connect 6-pin socket on end of furnished ac or dc power cable to 6-pin plug on rear panel.

Table 4-2. AN/GRM-114 Operating Procedures — Continued

Condition	Procedure
Startup (Continued)	b. For ac operation, connect 3-pin grounded plug of ac power cable to standard 3-pin grounded outlet. **WARNING** Do not connect 3-pin grounded plug to 2-pin outlet through an adapter. Electrical shock may result. c. For dc operation, connect cigarette lighter adapter of dc power cable to cigarette lighter socket. d. Set the PWR/OFF/BATT switch on front panel to PWR.
Emergency	If battery weakens and recharging is not practical, first disconnect power from UUT (if UUT is connected), then set PWR/OFF/BATT switch on front panel to OFF position, connect external ac or dc power supply as specified in paragraphs a, b, or c above, then set PWR/OFF/BATT switch to PWR position. Finally, connect power to UUT (if UUT is connected).
Stopping	Disconnect power from UUT (if UUT is connected). Set PWR/OFF/BATT switch on front panel to OFF position. Disconnect UUT from AN/GRM-114. Remove power cable socket from plug on rear panel then remove either 3-pin grounded plug (ac power cable) from 3-pin grounded outlet, or cigarette lighter adapter from cigarette lighter socket.

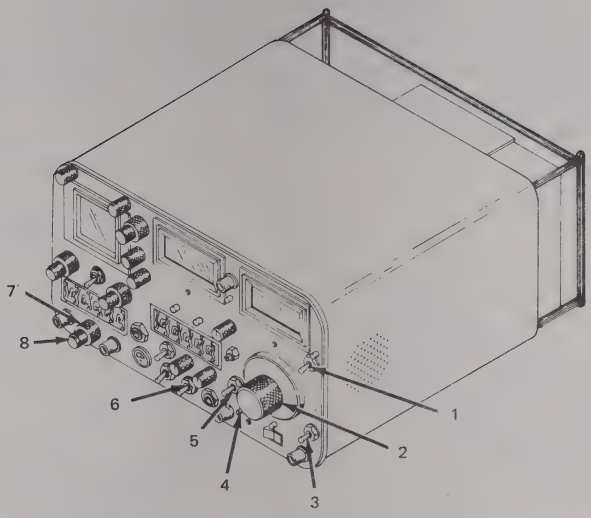

Figure 4-2. RF signal generator controls, indicators, and connectors

Table 4-3. RF Signal Generator Initial Adjustments and Control Settings

Figure 4-2 Reference No.	Control, indicator, or connector	Initial adjustment or setting
1	HI LVL/μV x 100/NORM switch	NORM
2	RF LEVEL/BFO INJECTION dial	Fully ccw
3	AUTO/OFF/ZERO, BATT switch	AUTO
4	RCVR WIDE/MID/NARROW switch	NARROW
5	GEN/RCVR switch	GEN
6	INT MOD/RCVR switch	RCVR
7	INT MOD/OFF switch	Fully ccw, detent (OFF)
8	1 kHz INT MOD control	Fully ccw, detent (OFF)
9	EXT V/DIV vernier	CAL
10	SWEEP vernier	Fully cw, detent CAL

Table 4-4. RF Signal Generator Operating Instructions

Step	Procedure	Illustration
1	Set FREQUENCY MHz thumbwheels to desired rf frequency output.	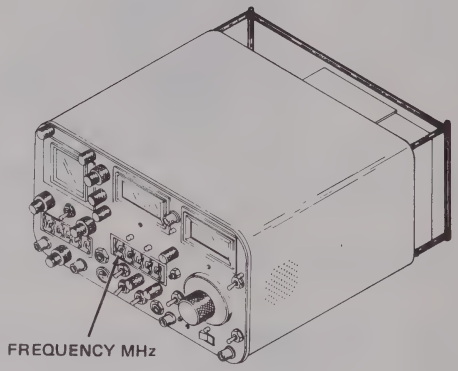
2	For an rf output less than 50 μV, set HI LVL/ μV x 100/NORM switch to NORM and rotate RF LEVEL/BFO INJECTION dial to desired μV setting. NOTE RF output in dBm is indicated by the reading on dBm scale. The AN/GRM-114 is now generating rf signals at desired frequency and output level.	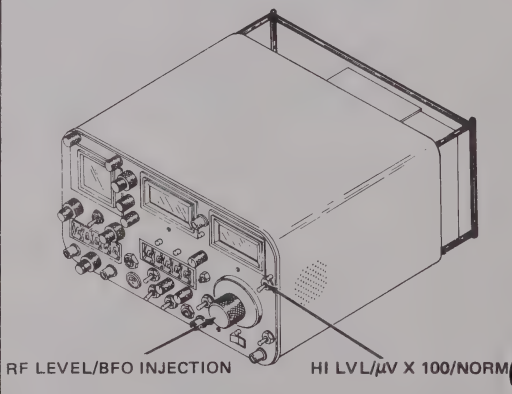

Table 4-4. RF Signal Generator Operating Instructions — Continued

Step	Procedure	Illustration
3	For an rf output level greater than 50 μV (but less than 5000 μV): (a) Place HI LEVEL/μV X 100/NORM switch to μV X 100 position. (b) Rotate RF LEVEL/BFO INJECTION dial to desired μV setting. The AN/GRM-114 is now generating rf signals at desired frequency and output level. NOTE RF output level in μV is now 100 times the setting of RF LEVEL/BFO INJECTION dial on μV scale. Equivalent rf output level in dBm can be determined by mathematically adding +40 dBm to reading on dBm scale.	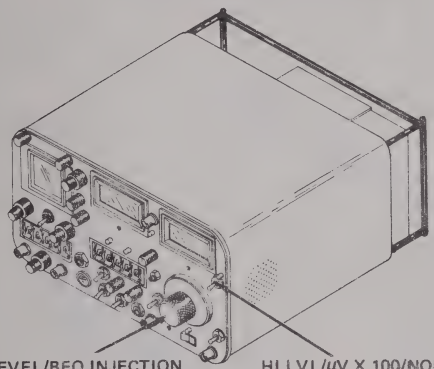
4	For an rf output level greater than —35 dBm: (a) Place HI LVL/μV X 100/NORM switch to HI LVL position. (b) Slowly rotate RF LEVEL/BFO INJECTION dial cw until 0 dBm Lamp lights. (c) Record setting of RF LEVEL/BFO INJECTION dial on dBm scale. (d) Add result obtained in step 4. (c) to desired rf output level in dBm. Record result. (e) Rotate RF LEVEL/BFO INJECTION dial to setting obtained in step 4. (d). (f) The AN/GRM-114 is now generating rf signals at desired frequency and output level.	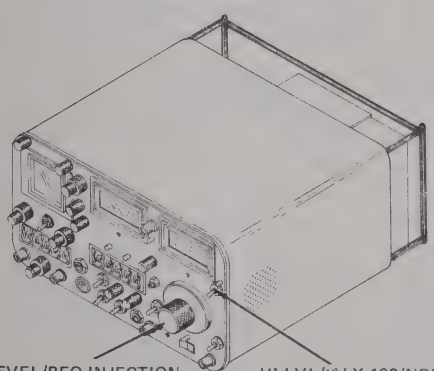

Table 4-5. RF Signal Generator Operating Instructions for AM RF Signals

Step	Procedure	Illustration
1	Place AM/FM switch to AM.	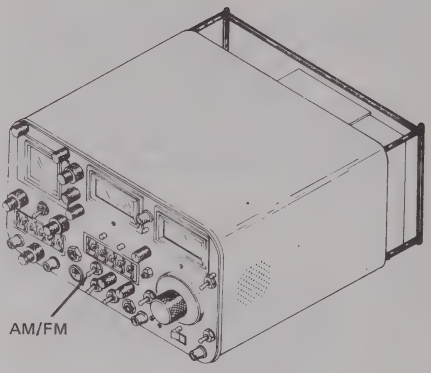
2	Set MODULATION FREQ Hz thumbwheels to desired tone modulation frequency.	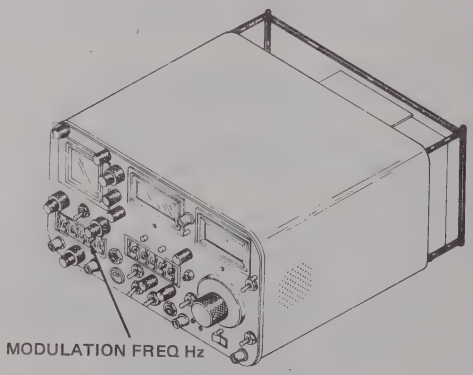

Table 4-5. RF Signal Generator Operating Instructions for AM RF Signals — Continued

Step	Procedure	Illustration
3	Rotate ANALY DISPR/OFF control fully ccw to detent position.	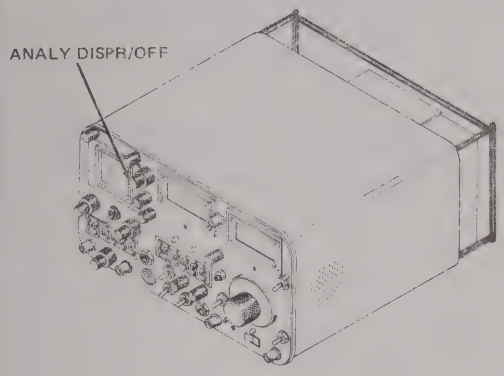
4	Place EXT V/DIV, control to 1.5 KHz, 6 KHz or 15 KHz.	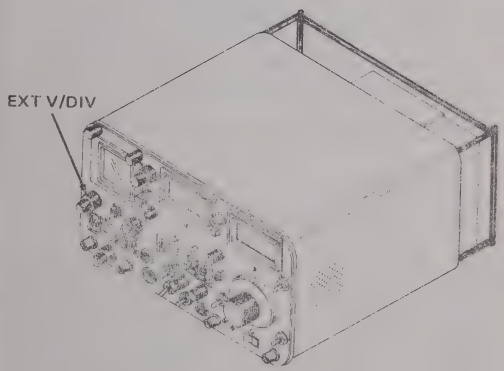

Table 4-5. RF Signal Generator Operating Instructions for AM RF Signals — Continued

Step	Procedure	Illustration
	CAUTION When applying power to oscilloscope or spectrum analyzer through PWR/OFF/BATT switch or AC/DC/OFF switch, make sure INTENSITY control is at moderate (left) position.	
5	Adjust INTENSITY control cw and FOCUS control appropriately for a sharp visible trace display.	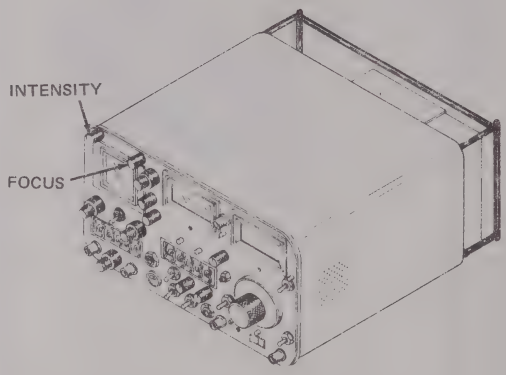
6	Adjust VERT control and HORIZ control to obtain a centered trace, with lower edge of displayed carrier aligned with major horizontal axis.	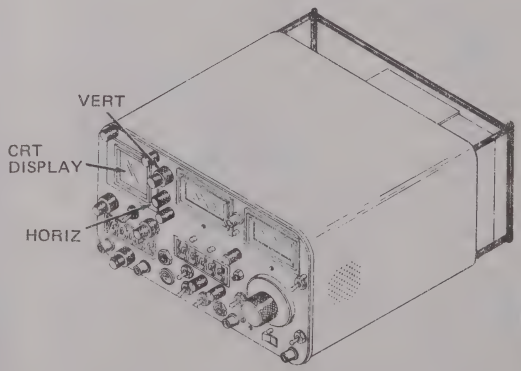

Table 4-5. RF Signal Generator Operating Instructions for AM RF Signals — Continued

Step	Procedure	Illustration
7	Measure peak-to-peak amplitude (in graticule divisions) of displayed carrier. Record result.	
8	Apply result obtained in step 7 to the following equation: $x = \frac{(\text{desired \% modulation}) \times (\text{result of step 7})}{100}$ where: x = number of graticule divisions (peak-to-peak) of modulated signal.	
	NOTE Steps 9. (a) and (b) must be performed simultaneously, as one will affect the other.	
9	(a) Adjust VERT control to align negative peak of the modulated signal with the major horizontal axis. (b) Rotate INT MOD/OFF control to adjust peak-to-peak amplitude of the same modulated signal (in graticule divisions) to the value of x obtained in step 8. (c) The signal generator is now calibrated to the desired percent modulation and is generating at the selected frequency and output level.	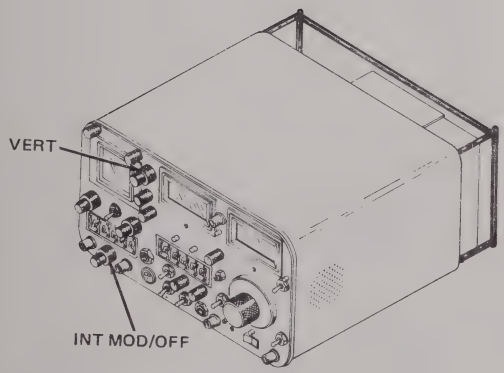

Table 4-6. RF Signal Generator Operating Instructions for FM RF Signals

Step	Procedure	Illustration
1	Return controls and indicators to the settings listed in table 4-3. Then generate an rf signal by performing steps of table 4-4.	
2	Place AM/FM switch to FM.	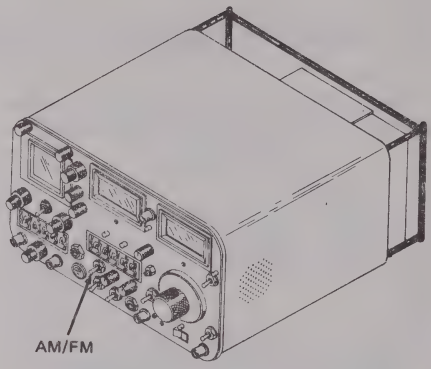
3	Set MODULATION FREQ Hz thumbwheels to desired tone modulation frequency.	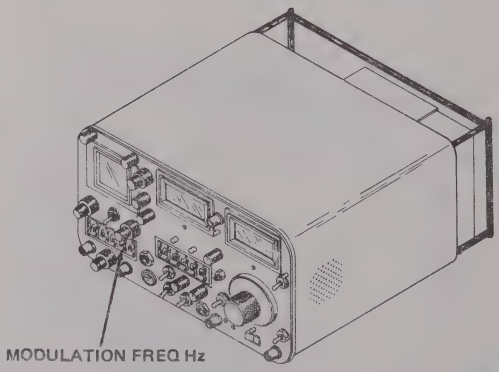

Table 4-6. RF Signal Generator Operating Instructions for FM RF Signals — Continued

Step	Procedure	Illustration
4	Place DEV/PWR control to desired deviation range (2, 6, or 20 KHz).	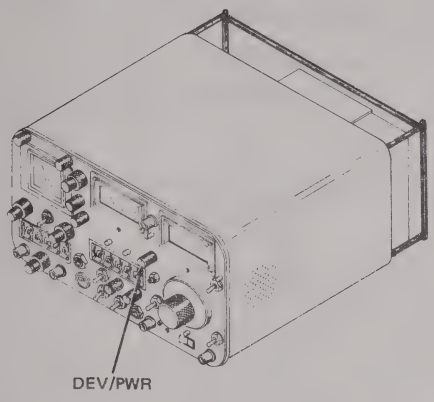
5	Rotate INT MOD/OFF control cw while observing DEVIATION (KHz)/WATTS meter until meter indicates desired deviation on appropriate scale. The AN/GRM-114 is now generating frequency modulated rf signals within the desired deviation range. NOTE If deviation is above 5 kHz, place RCVR WIDE/MID/NARROW switch to MID or WIDE position. Signals at a 1-kHz rate with more than 5-kHz deviation must be monitored with RCVR WIDE/MID/NARROW switch in MID position. Signals modulated above 2 kHz should be monitored with RCVR WIDE/MID/NARROW switch in WIDE position. Note residual modulation indication due to noise on DEVIATION (KHz)/WATTS meter; add this value to desired value.	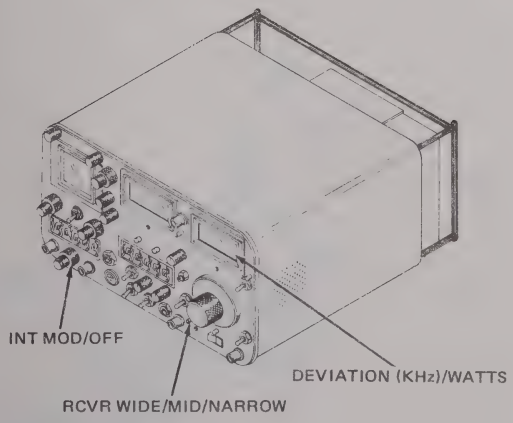

Table 4-6. RF Signal Generator Operating Instructions for FM RF Signals — Continued

Step	Procedure	Illustration
6	Emergency operating procedures. For emergency operating procedures (battery weakening) refer to table 4-2.	
7	Stopping procedures. Refer to the stopping procedures in table 4-2.	

4-5. Oscilloscope Operating Instructions.

CAUTION

Do not apply more than 200 V (peak-to-peak) to the SCOPE INPUT connector. If an oscilloscope probe is used to apply a signal from a UUT to the SCOPE INPUT connector, attach the ground lead of the probe to UUT ground.

Table 4-7 lists the initial adjustments and control settings (figure 4-3) necessary to display a trace on the oscilloscope. Table 4-8 lists the operating instructions.

NOTE

To apply power to the AN/GRM-114, refer to the instructions in paragraph 4-4.

Warm-up time of the crt is approximately 30 seconds from a "cold" startup. The trace will not appear until the crt warms up.

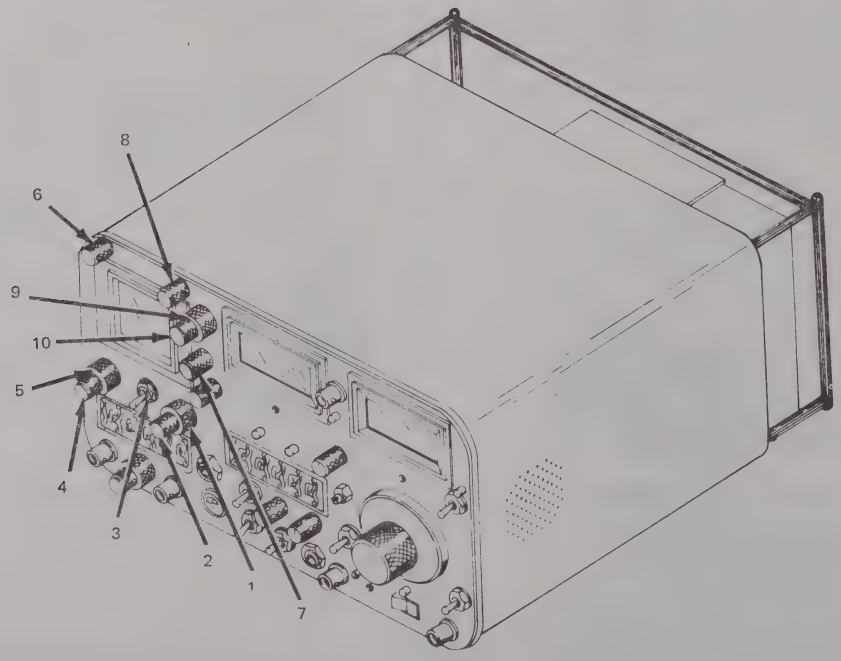

Figure 4-3. Oscilloscope controls, indicators, and connectors

Table 4-7. Oscilloscope Initial Adjustments and Control Settings

Figure 4-3 Reference No.	Control, indicator or connector	Initial adjustment or setting
1	SWEEP control	1 ms
2	SWEEP vernier control	Fully cw, detent (in CAL)
3	AC/OFF/DC switch	AC
4	EXT V/DIV vernier control	Fully cw, detent (in CAL)
5	EXT V/DIV control	10 V/DIV
6	INTENSITY control	Midrange
7	HORIZ control	Midrange
8	FOCUS control	Midrange
9	VERT control	Midrange
10	ANALY DISPR/OFF control	Fully ccw, detent (OFF)

Table 4-8. Oscilloscope Operating Procedures

Step	Procedure	Illustration
	CAUTION Do not exceed 200 V (peak-to-peak) into the SCOPE IN connector. When applying power to oscilloscope or spectrum analyzer through PWR/OFF/BATT switch or AC/DC/OFF switch, make sure INTENSITY control is at moderate (left) position.	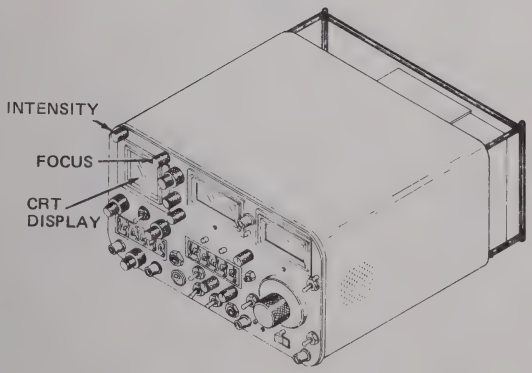
1	Adjust INTENSITY control cw and FOCUS control appropriately to obtain a sharp visible trace display.	

Table 4-8. Oscilloscope Operating Procedures — Continued

Step	Procedure	Illustration
2	Adjust VERT control and HORIZ control to center scope trace over major horizontal axis of crt.	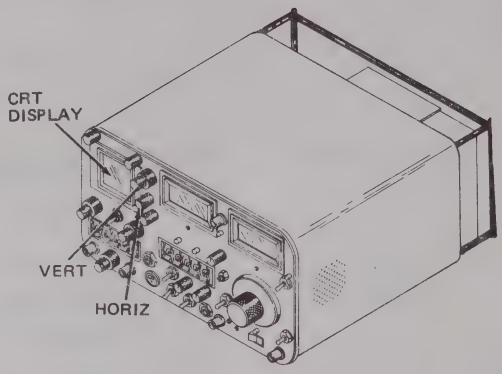
3	Connect signal stimuli to SCOPE IN connector.	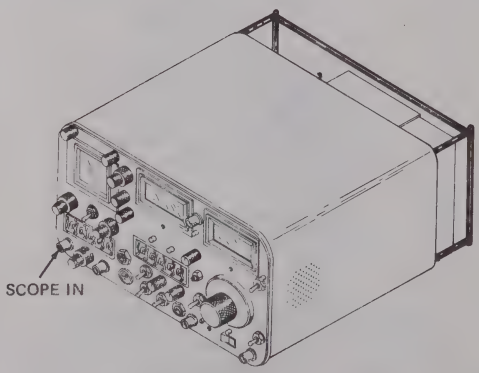

Table 4-8. Oscilloscope Operating Procedures — Continued

Step	Procedure	Illustration
4	Adjust SWEEP control, EXT V/DIV control and SWEEP vernier control to obtain a stable waveform. NOTE EXT V/DIV vernier control must remain in CAL position (fully cw, detent).	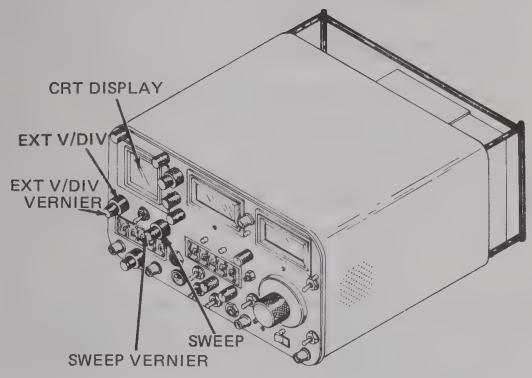
5	Disconnect the signal stimuli from the SCOPE IN connector.	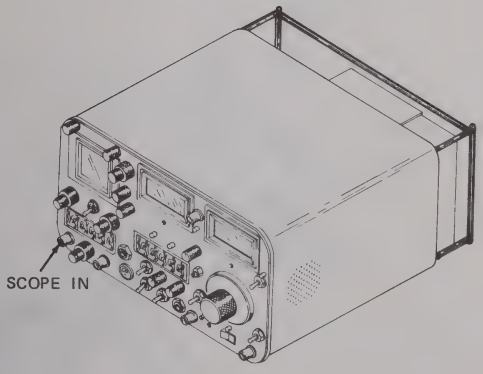

Table 4-8. Oscilloscope Operating Procedures — Continued

Step	Procedure	Illustration
6	Emergency operating procedures. Refer to the emergency operating procedures (battery weakening) in table 4-2.	
7	Stopping procedures (a) Set AC/DC/OFF switch to OFF position. (b) For further stopping procedures, refer to table 4-2.	

4-6. Receiver Operating Instructions. Table 4-9 lists the initial adjustments and control settings (figure 4-4) necessary to receive signals. Table 4-10 lists the operating instructions.

NOTE

To apply power to the AN/GRM-114, refer to the instructions in paragraph 4-3.

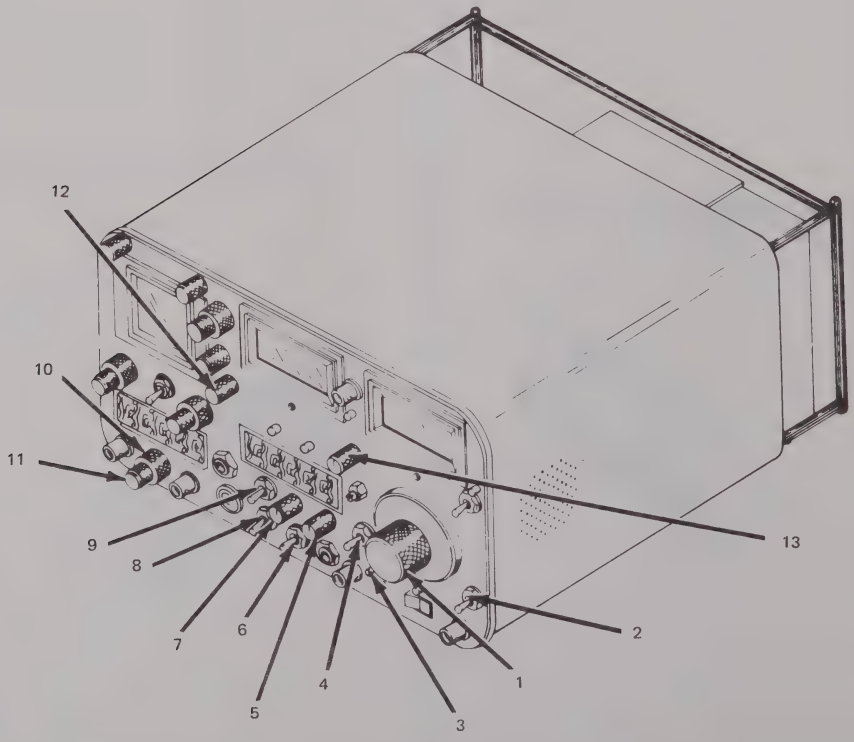

Figure 4-4. Receiver controls, indicators, and connectors

Table 4-9. Initial Adjustments and Control Settings

Figure 4-4 Reference No.	Control, indicator or connector	Initial adjustment or setting
1	RF LEVEL/BFO INJECTION dial	Fully ccw
2	AUTO/OFF/ZERO, BATT switch	AUTO
3	RCVR WIDE/MID/NARROW switch	WIDE
4	GEN/RCVR switch	RCVR
5	SQUELCH/OFF control	Fully ccw, short of detent
6	INT MOD/RCVR switch	RCVR
7	VOL control	Fully ccw
8	BFO/OFF switch	OFF
9	AM/FM switch	AM or FM depending on mode of signal to be received.
10	INT MOD/OFF control	Fully ccw, detent (OFF)
11	1 KHz INT MOD/OFF control	Fully ccw, detent (OFF)
12	1.5/5/15 KHz control	15 KHz
13	DEV/PWR control	SIG

Table 4-10. Receiver Operating Instructions

Step	Procedure	Illustration
	CAUTION Do not connect a transmitter to the ANT INPUT connector. Connect only an external antenna to the ANT INPUT connector. Do not exceed 200 V (peak-to-peak) into the SCOPE IN connector. NOTE Remove any static discharge from an unterminated antenna before connecting it to the AN/GRM-114.	

Table 4-10. Receiver Operating Instructions — Continued

Step	Procedure	Illustration
	CAUTION Maximum continuous input to this connector must not exceed 0.25 W. Maximum input is —30 dBm for proper spectrum analyzer operation (signals above —30 dBm may cause spurious signals to be generated and displayed by AN/GRM-114).	
1	Select one of the following methods of signal reception: (a) External antenna Connect external antenna to ANT INPUT connector for "off-the-air" monitoring. Proceed to step 3. **CAUTION** Do not apply more than 20 watts of continuous input to TRANS/RCVR connector. (b) Direct Cable Connection from UUT Connect cable from UUT to TRANS/RCVR connector. Maximum operating "ON" time for measurement of transmitter output using TRANS/RCVR connector is: 10 seconds at 100 W, 15% duty cycle, 20 seconds at 50 W, 30% duty cycle, or 2 minutes at 30 W, 50% duty cycle.	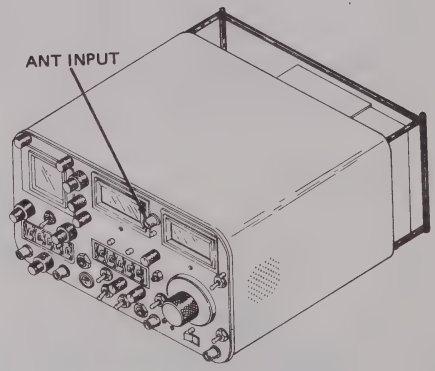 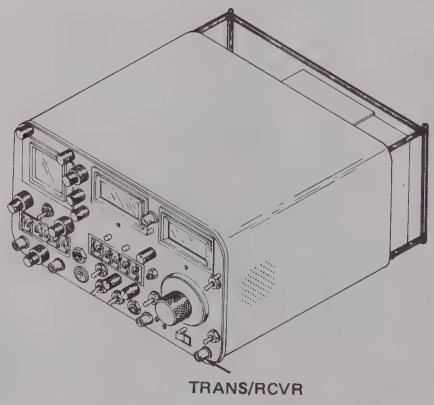
2	Apply power to UUT (if applicable).	

Table 4-10. Receiver Operating Instructions — Continued

Step	Procedure	Illustration
3	Set FREQUENCY MHz thumbwheels to frequency of signal to be received.	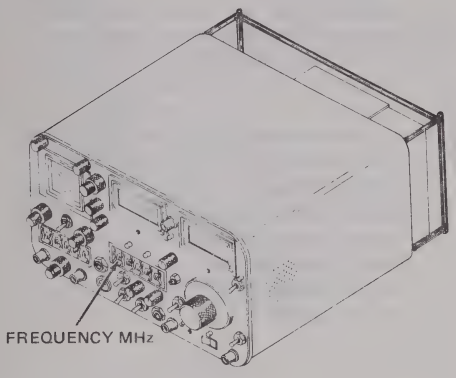
4	Adjust VOL control to a comfortable listening level.	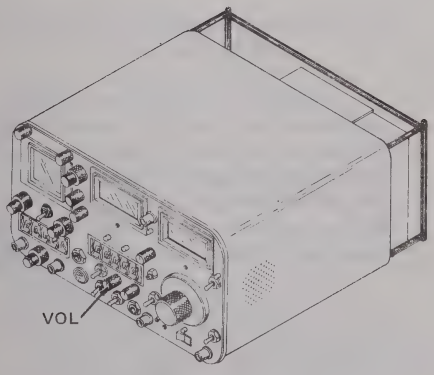

Table 4-10. Receiver Operating Instructions — Continued

Step	Procedure	Illustration
5	If an area of the spectrum is being monitored where frequency channels are packed closely together, bandwidth of signal may be reduced by placing RCVR WIDE/MID/NARROW switch to MID or NARROW setting. When monitoring FM signals, the NARROW setting of RCVR WIDE/MID/NARROW switch will not accommodate greater than 5-kHz FM deviation of most FM transmitters. If FM deviation is more than ±5 kHz, place RCVR WIDE/MID/NARROW switch to MID position. NOTE Ensure that proper bandpass width has been selected on RCVR WIDE/MID/NARROW switch. Too high a bandpass will cause higher noise reading. Too low a bandpass will cause distortion.	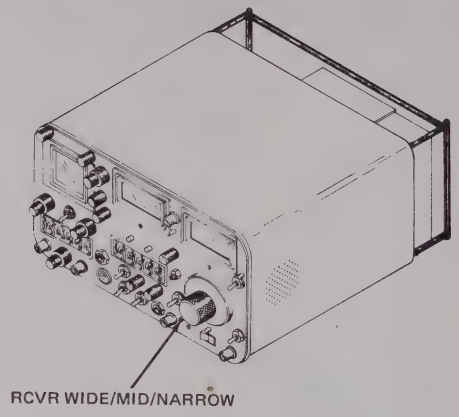
6	Fine tune the receiver to center frequency (within ±100 Hz) as follows: (a) If FREQ. ERROR meter appears centered at zero, proceed to step 6 (b); if meter needle is not centered, increase or decrease settings of FREQUENCY MHz thumbwheels in 10-kHz and 1-kHz steps to center needle as closely as possible to zero, then proceed to step 6 (b). (b) Rotate 1.5/5/15 KHz control to 5 KHz position. If FREQ. ERROR meter remains centered at zero, proceed to step 6 (c); if meter needle deviates from zero, increase or decrease settings of FREQUENCY MHz thumbwheels in 1-kHz steps to center needle as closely as possible to zero, then proceed to step 6 (c).	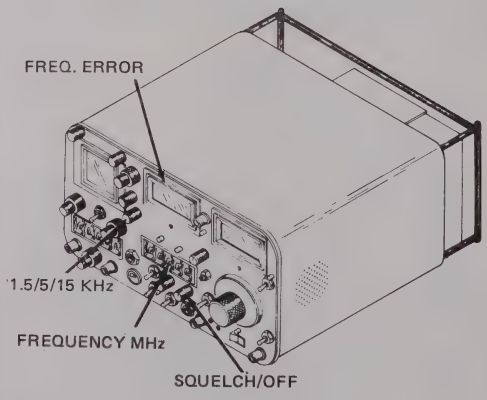

Table 4-10. Receiver Operating Instructions — Continued

Step	Procedure	Illustration
6 (Cont)	(c) Rotate 1.5/5/15 KHz control to 1.5 KHz position. Increase or decrease settings of FREQUENCY MHz thumbwheels in 100-Hz steps until meter needle is centered at zero (within ±1 minor division on meter scale). Setting of FREQUENCY MHz thumbwheels now reflect exact frequency of received signal.	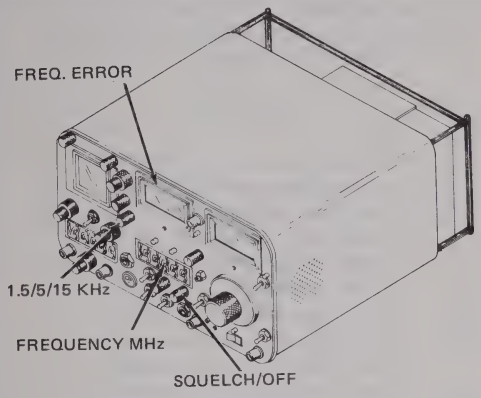
7	If received signal is being monitored through a direct cable connection at TRANS/RCVR connector, rotate DEV/PWR control to WATTS x 10. If DEVIATION (KHz)/WATTS meter reading is under 10 watts (on red scale), rotate DEV/PWR control to WATTS x 1.	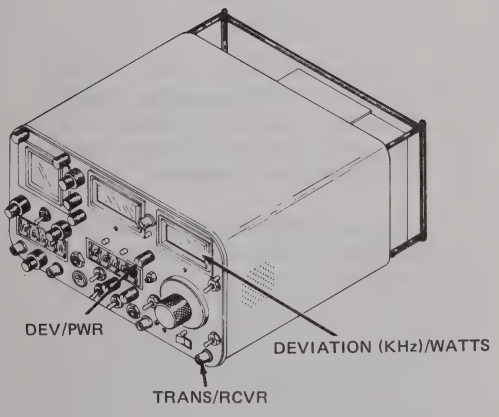

Table 4-10. Receiver Operating Instructions — Continued

Step	Procedure	Illustration
8	Output power of UUT can now be measured on red scale of DEVIATION (KHz)/WATTS meter. NOTE For signals received "off-the-air", a representation of relative signal strength can be determined by observing DEVIATION (KHz)/WATTS meter needle deflection (with DEV/PWR control in SIG position). As signal strength increases, the meter needle deflection will increase toward the right of meter scale. For exact measurement of "off-the-air" signal strength, refer to procedures for measuring signal strength under spectrum analyzer operating instructions.	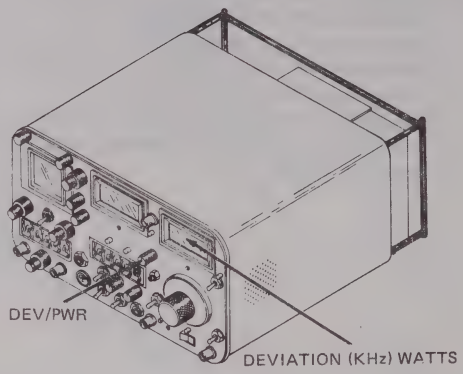
9	Emergency operating procedures. (a) Broken antenna. Remove antenna from ANT INPUT connector. Remove insulation to expose wire. Butt the two separated ends together and secure with any nonconductive material. (b) Jammed signals. It is likely that under real or simulated tactical conditions the receiver will be jammed by the enemy. Enemy jamming is done by transmitting a strong signal on the same frequency as that used for communication, making it difficult or impossible to receive the desired signal. Unusual noise or signal strength indications without messages may be caused by enemy jamming, signals from a friendly station, or noise from a local source; or the receiver may be defective. To determine whether or not the interference is originating in the	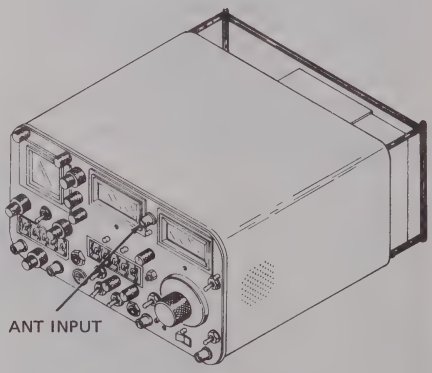

Table 4-10. Receiver Operating Instructions — Continued

Step	Procedure	Illustration
9 (Cont)	AN/GRM-114, disconnect and remove the antenna. If the interference continues, the AN/GRM-114 is defective. Enemy jamming signals may be typed as continuous wave or modulated. A jamming signal may be intended to block a single frequency. This is called spot jamming. The enemy may use one or several transmitters to jam a block or band of frequencies. This method is called barrage jamming. Following are several types of jamming signals: (1) CW (continuous wave) jamming. CW jamming is transmitted as a steady carrier. This signal beats with another signal and produces a steady tone or in some cases, a quieting effect. CW jamming signals may also be keyed by using a random on-and-off signal or using actual code characters keyed to the same rate or a little faster than the signal being received. (2) Modulated jamming. Modulated jamming signals may consist of noise, laughter, singing, music, various tone, or almost any unusual sound, or it may be a combination of these sounds. Various types of modulated jamming signals are explained below. (a) *Spark.* This is one of the simplest, most effective, and most easily produced jamming signals. This type of signal sounds very rough, raspy, and sometimes like an operating electric motor with sparking brushes. The signal is very broad; therefore, it will interfere with a large number of communication channels. (b) *Sweep-through.* This signal is the result of sweeping or moving a carrier back and forth at a slow or rapid rate. The numerous signals of varying amplitude and frequency	

Table 4-10. Receiver Operating Instructions — Continued

Step	Procedure	Illustration
9 (Cont)	produce a sound like that of a low-flying airplane passing overhead. This type of jamming is effective over a broad range of frequencies. When it is varied rapidly, it is effective against all types of voice signals. (c) *Stepped tones or bagpipes.* This signal usually consists of several separate tones. The tones are transmitted in the order of first increasing and then decreasing pitch, repeated over and over. The audible effect is like the sound of a Scottish bagpipe. (d) *Noise.* Noise is random both in amplitude and frequency. It produces a sound similar to that heard when a receiver is not tuned to a station and the VOL control is turned to maximum. (e) *Gulls.* This signal consists of a quick rise and slow fall of a variable audio frequency. The sound is similar to the cry of the sea gull. (f) *Tone.* This signal consists of a single audio frequency of unvarying tone. It produces a steady howl. Another method of tone jamming is to vary it slowly. This produces a howling sound of varying pitch. (3) Antijamming procedures. When it is determined that the incoming signal is being jammed, notify your immediate superior officer and continue to operate the equipment. To provide maximum intelligibility of jammed signals, follow one or more of the operational procedures given in the following steps. If these procedures do not provide sufficient signal separation for satisfactory operation, change to an alternate frequency. (a) Detune FREQUENCY MHz thumbwheel switches by several increments on either side of received signal.	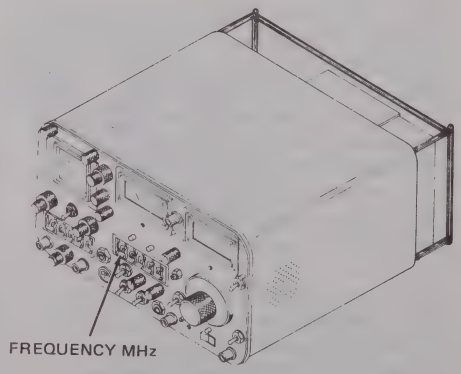

Table 4-10. Receiver Operating Instructions — Continued

Step	Procedure	Illustration
9 (Cont)	This may cause some separation of received signal and jamming signal. (b) Vary VOL control. This may reduce jamming signal enough to permit weak signal to be heard. (c) Refer to table 4-2 for further emergency operating procedures (battery weakening).	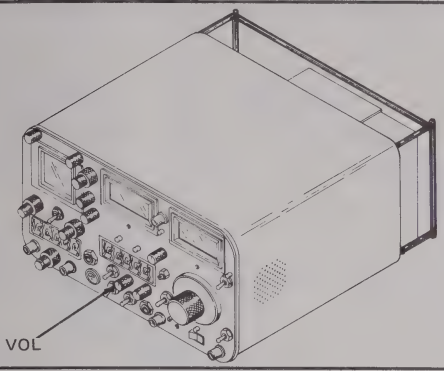
10	Stopping procedures. Refer to the stopping procedures in table 4-2.	

4-7. Spectrum Analyzer Operating Instructions. Table 4-11 lists the initial adjustments and control settings (figure 4-5) necessary to operate the spectrum analyzer. Table 4-12 lists the operating instructions for use of the spectrum analyzer. To detect spurious signals with the spectrum analyzer refer to table 4-13.

NOTE

To apply power to the AN/GRM-114, refer to the instructions in paragraph 4-3.

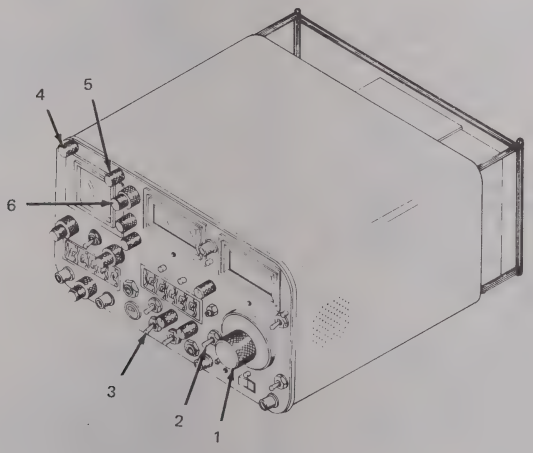

Figure 4-5. Spectrum analyzer controls, indicators, and connectors

Table 4-11. Initial Adjustments and Control Settings

Figure 4-5 Reference No.	Control, indicator, or connector	Initial adjustment or setting
1	RF LEVEL/BFO INJECTION dial	Fully ccw
2	GEN/RCVR switch	RCVR
3	BFO/OFF switch	OFF
4	INTENSITY control	Midrange
5	FOCUS control	Midrange
6	ANALY DISPR/OFF control	Fully cw

Table 4-12. Spectrum Analyzer Operating Instructions

Step	Procedure	Illustration
	CAUTION Do not exceed 200 V (peak-to-peak) into the SCOPE IN connector. NOTE Remove any static discharge from an unterminated antenna before connecting it to the AN/GRM-114. Perform the following steps to measure signal strength. **CAUTION** Maximum continuous input to this connector must not exceed 0.25 W. Maximum input is −30 dBm for proper spectrum analyzer operation (signals above −30 dBm may cause spurious signals to be generated and displayed by AN/GRM-114).	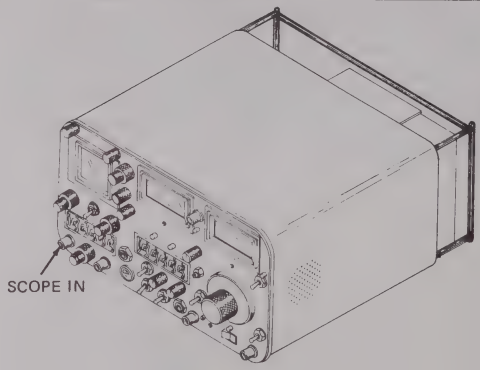
1	Connect signal stimuli to ANT INPUT connector, or connect transmitter output to TRANS/RCVR connector.	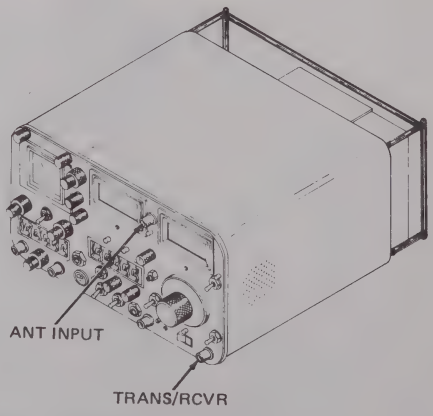

Table 4-12. Spectrum Analyzer Operating Instructions — Continued

Step	Procedure	Illustration
	CAUTION When applying power to the oscilloscope or spectrum analyzer from PWR/OFF/BATT switch or AC/DC/OFF switch, make sure INTENSITY control is in moderate (left) position.	
2	Adjust INTENSITY control cw and FOCUS control appropriately to obtain a sharp visible trace display. NOTE Warmup time of crt is approximately 30 seconds from a "cold" startup; trace display will not become visible until crt achieves warmup.	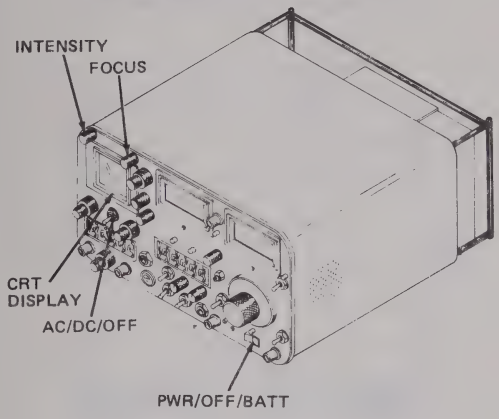
3	Adjust FREQUENCY MHz thumbwheels so that desired signal is aligned along major vertical axis of crt. Signal to be measured is now on center frequency.	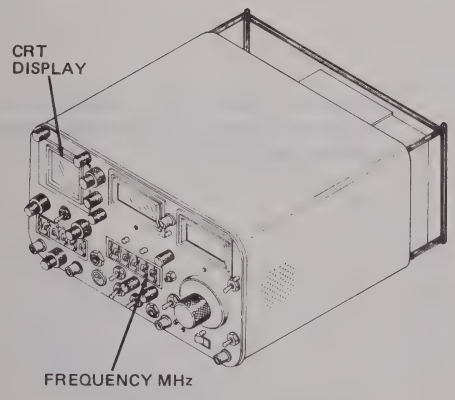

Table 4-12. Spectrum Analyzer Operating Instructions — Continued

Step	Procedure	Illustration
4	Rotate ANALY DISPR/OFF control fully ccw, short of detent position.	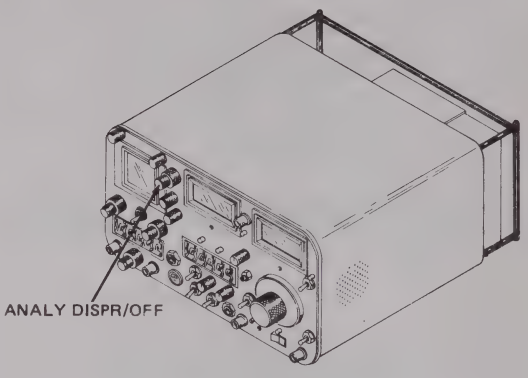
5	Again adjust FREQUENCY MHz thumbwheels so desired signal is aligned along major vertical axis on crt.	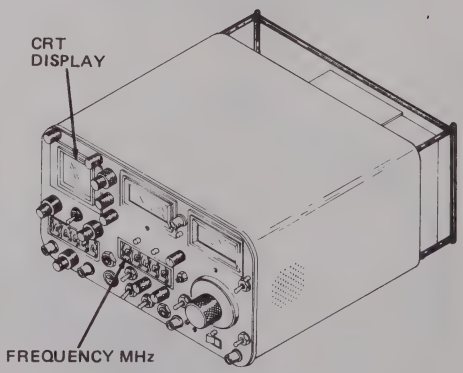

Table 4-12. Spectrum Analyzer Operating Instructions — Continued

Step	Procedure	Illustration
6	Measure and record peak of displayed signal along vertical dB scale.	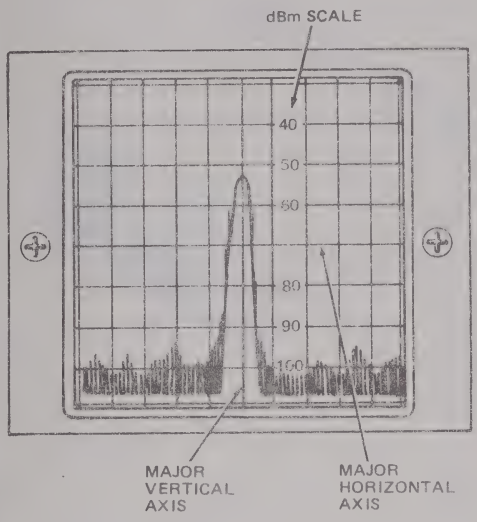
7	Offset displayed signal to either side of major vertical axis by two major graticule divisions by increasing or decreasing settings of FREQUENCY MHz thumbwheels.	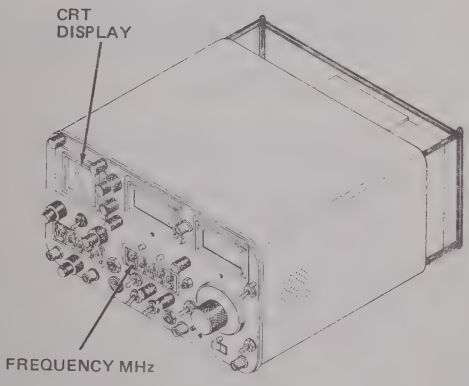

Table 4-12. Spectrum Analyzer Operating Instructions — Continued

Step	Procedure	Illustration
8	Place BFO/OFF switch to BFO.	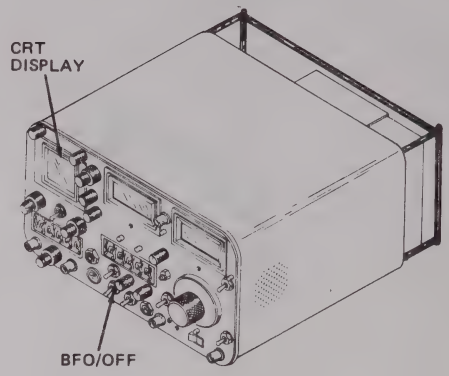
9	Rotate RF LEVEL/BFO INJECTION dial cw so that injected bfo signal is the same amplitude as signal under test. NOTE If injected bfo signal cannot be raised to amplitude of signal under test, set HI LVL/μV X 100/ NORM switch to μV X 100. Again rotate RF LEVEL/BFO INJECTION dial cw until injected bfo signal matches amplitude of signal under test.	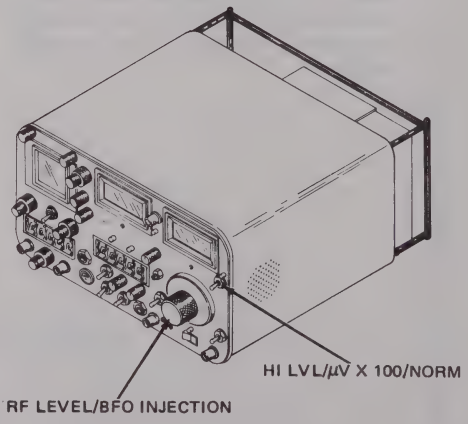

Table 4-12. Spectrum Analyzer Operating Instructions — Continued

Step	Procedure	Illustration
10	Read signal strength of signal under test on μV or dBm scale of RF LEVEL/ BFO INJECTION dial as follows: (a) If HI LVL/μV X 100/NORM switch is at NORM, setting of RF LEVEL/BFO INJECTION dial represents measured signal strength. (b) If HI LVL/μV X 100/NORM switch is at μV X 100, add +40 dBm to reading of RF LEVEL/BFO INJECTION dial on dBm scale to obtain true signal strength in dBm. For equivalent signal strength in μV, multiply μV setting of RF LEVEL/BFO INJECTION dial by 100.	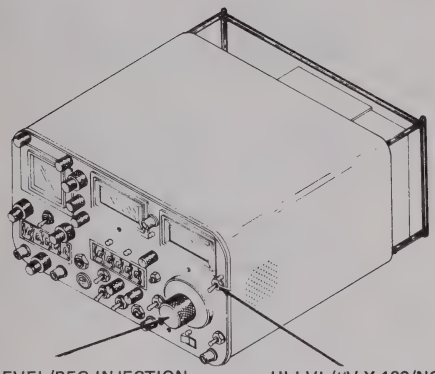

Table 4-13. Spectrum Analyzer Operating Instructions for Spurious Signal Detection

Step	Procedure	Illustration
1	Return controls and indicators to the settings listed in table 4-11. NOTE Remove any static discharge from an unterminated antenna before connecting to the AN/GRM-114.	

Table 4-13. Spectrum Analyzer Operating Instructions for Spurious Signal Detection — Continued

Step	Procedure	Illustration
1 (Cont)	CAUTION Do not connect transmitter to ANT INPUT connector. Connect only external antenna to ANT INPUT connector. Maximum continuous input to ANT INPUT connector must not exceed 0.25 W. Maximum input to ANT INPUT connector is —30 dBm for proper spectrum analyzer operation (signals above —30 dBm may cause spurious signals to be generated and displayed by AN/GRM-114). If signal is to be monitored through a UUT via a direct cable connection to TRANS/RCVR connector, do not apply more than 20 watts of CONTINUOUS input to TRANS/RCVR connector. Maximum operating "ON" time for measurement of transmitter output using TRANS/RCVR connector is: 10 seconds at 100 W, 15% duty cycle, 20 seconds at 50 W, 30% duty cycle, or 2 minutes at 30 W, 50% duty cycle.	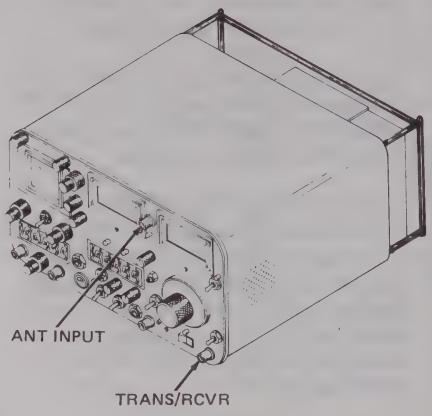
2	Connect external antenna to ANT INPUT connector for "off-the-air" monitoring.	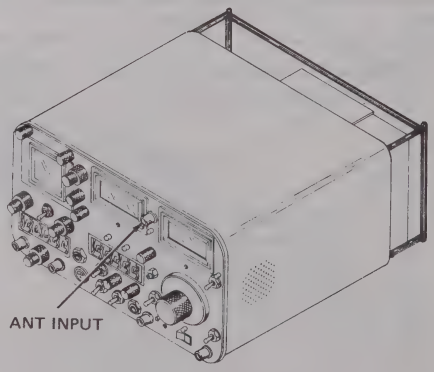

Table 4-13. Spectrum Analyzer Operating Instructions for Spurious Signal Detection — Continued

Step	Procedure	Illustration
3	Apply power to UUT (if applicable). CAUTION When applying power to spectrum analyzer or oscilloscope from PWR/OFF/BATT switch or AC/DC/OFF switch, make sure INTENSITY control is in moderate (left) position.	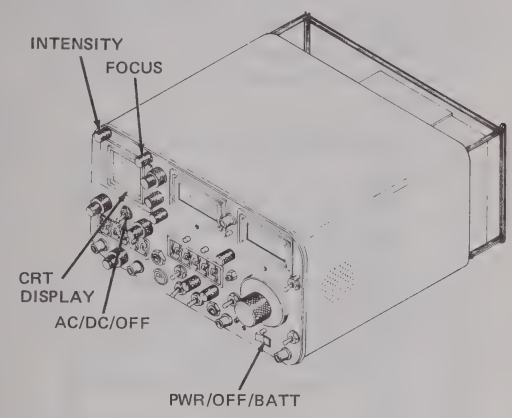
4	Adjust INTENSITY control cw and FOCUS control appropriately for a sharp visible trace on crt. NOTE Warmup time of crt is approximately 30 seconds from a "cold" startup; trace display will not become visible until crt achieves warmup.	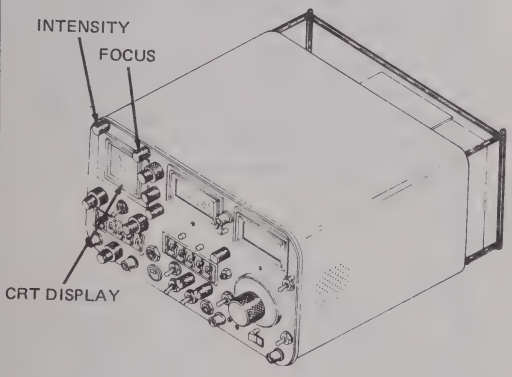
5	Set FREQUENCY MHz thumbwheels to desired center frequency.	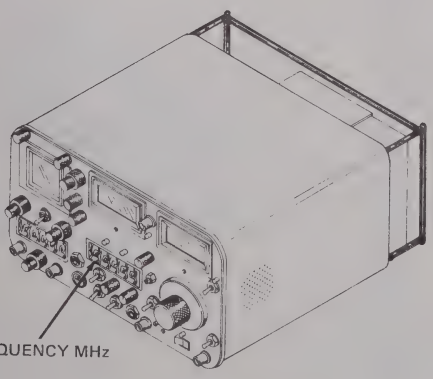

Table 4-13. Spectrum Analyzer Operating Instructions for Spurious Signal Detection — Continued

Step	Procedure	Illustration
6	Momentarily remove and reapply power to UUT (or in case of a transmitter spectral purity check, key transmitter on and off), while carefully observing carrier signal and surrounding span for any spurious signals. NOTE When interrupting power to UUT (or keying transmitter on and off), certain momentary spikes which protrude above the noise level may appear. Disregard these momentary spikes; look for signals which remain constant in amplitude during this time.	
7	To determine origin of spurious signal, increase or decrease setting of 1 MHz and 100 kHz segments of FREQUENCY MHz thumbwheels several times above or below center frequency.	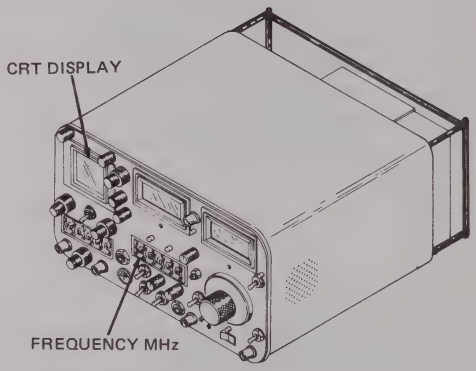

Table 4-13. Spectrum Analyzer Operating Instructions for Spurious Signal Detection — Continued

Step	Procedure	Illustration
7 (Cont)	(a) If the spurious signal moves closer to or further away from carrier signal, the spurious signal is being produced by the AN/GRM-114 and thus can be disregarded. (b) If the spurious signal moves in same direction and same distance as carrier signal, the spurious signal is being produced by UUT.	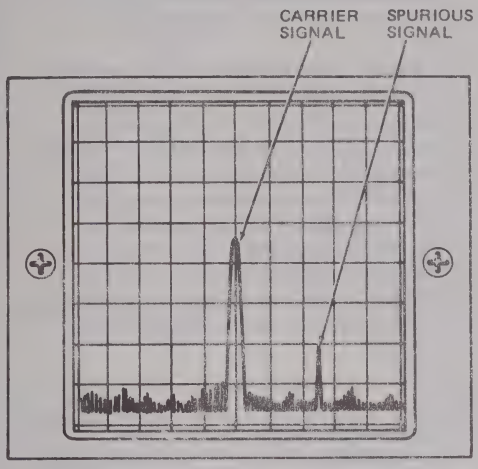
8	To determine frequency of spurious signal, increase or decrease the setting of the FREQUENCY MHz thumbwheels while rotating ANALY DISPR/OFF control ccw until the spurious signal is aligned with major vertical axis. The setting of FREQUENCY MHz thumbwheels represents frequency of spurious signal. NOTE ANALY DISPR/OFF, control should be fully ccw, short of detent when final frequency reading is taken. To verify actual center of AN/GRM-114 spectrum analyzer, place GEN/RCVR switch to GEN position and observe generated signal:	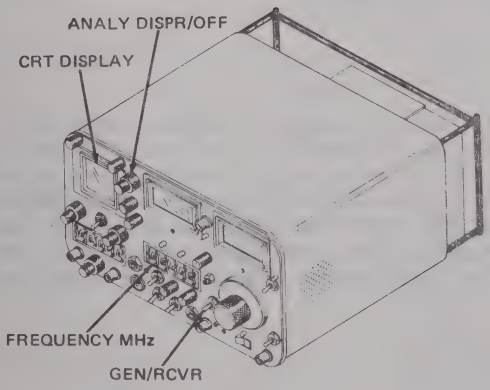

Table 4-13. Spectrum Analyzer Operating Instructions for Spurious Signal Detection — Continued

Step	Procedure	Illustration
8 (Cont)	(a) If generated signal is aligned with major vertical axis, frequency of detected spurious signal is equal to setting of FREQUENCY MHz thumbwheels. (b) If generated signal is not centered over major vertical axis, note position of generated signal on crt graticule; place GEN/RCVR switch to RCVR and increase or decrease setting of FREQUENCY MHz thumbwheels to align spurious signal to same position to which the generated signal was previously aligned. The setting of FREQUENCY MHz thumbwheels represents frequency of detected spurious signal.	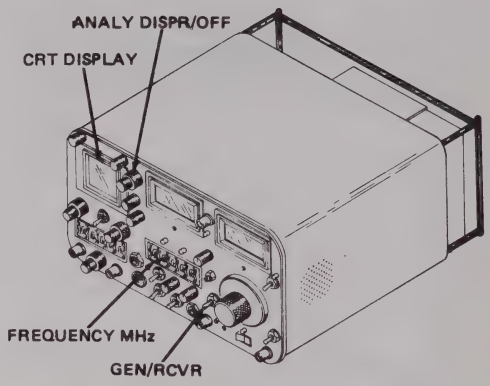
9	Emergency operating procedures. Refer to the emergency operating procedures in step 9 of table 4-10 and in table 4-2.	
10	Stopping procedures. Refer to the stopping procedures in table 4-2.	

4-8. Audio Generator Operating Instructions. When the AN/GRM-114 is used as an audio generator, the operation can be accomplished by either the use of the MM-100 to measure the audio signal level and match the impedance of the UUT or through the use of the oscilloscope as the audio signal level monitor. Therefore, two procedures are presented. Table 4-14 lists the initial adjustments and control settings (figure 4-6) necessary to generate an audio signal. Table 4-15 lists the operating instructions using the MM-100 and table 4-16 lists the operating instructions using the oscilloscope.

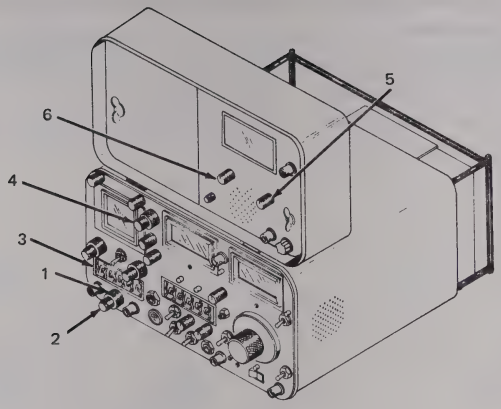

Figure 4-6. Audio generator controls, indicators, and connectors.

Table 4-14. Audio Generator Initial Adjustments and Control Settings

Figure 4-6 Reference No.	Control, indicator, or connector	Initial adjustment or setting
1	INT MOD/OFF control	Fully ccw, detent (OFF)
2	1 KHz INT MOD/OFF control	Fully ccw, detent (OFF)
3	MODULATION FREQ. Hz thumbwheels	0000.0 Hz
4	ANALY DISPR/OFF control	Fully ccw, detent (OFF)
5	FUNCTION switch (MM-100)	HI-Z
6	RANGE switch (MM-100)	300

Table 4-15. Audio Generation with MM-100 Operating Instructions

Step	Procedure	Illustration
1	Connect one end of coaxial cable to INT MOD OUT connector and opposite end of cable to the INPUT jack of MM-100.	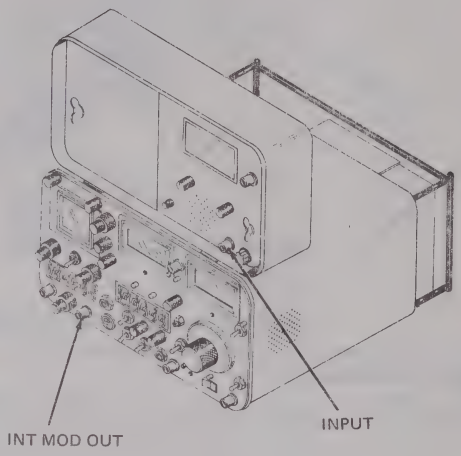
2	Determine the input impedance of the unit to be tested and determine the level of the audio signal to be inserted into the UUT.	

Table 4-15. Audio Generation with MM-100 Operating Instructions — Continued

Step	Procedure	Illustration
3	Set the FUNCTION switch to the setting which corresponds with the impedance of the UUT.	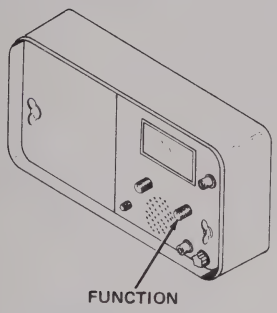
4	Set the RANGE switch to audio signal level to be injected into the UUT.	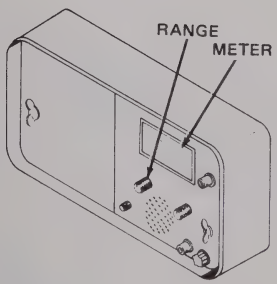

Table 4-15. Audio Generation with MM-100 Operating Instructions — Continued

Step	Procedure	Illustration
5	Set MODULATION FREQUENCY Hz thumbwheels to the desired audio frequency.	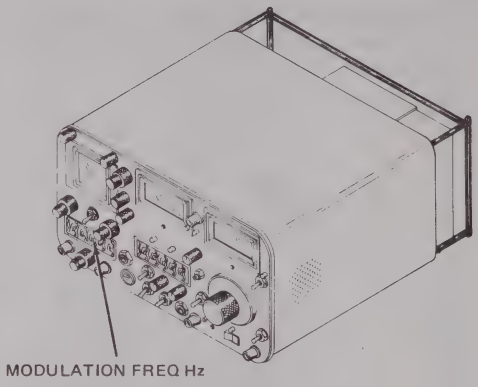
6	Apply power to AN/GRM-114 as instructed in paragraph 4-3 and also apply power to UUT. While observing the MM-100 meter, adjust INT MOD/OFF control to the desired signal level (ac volts rms).	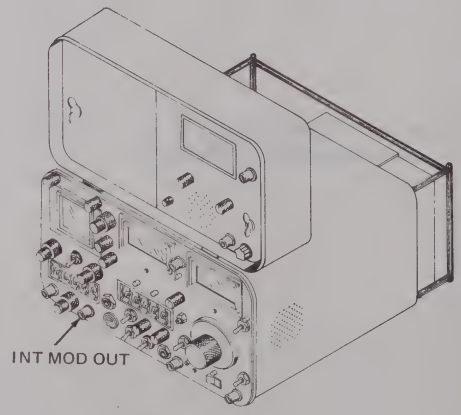

Table 4-15. Audio Generation with MM-100 Operating Instructions — Continued

Step	Procedure	Illustration
7	Disconnect the end of the cable from the INPUT jack of the MM-100 and connect the cable to the input of the UUT.	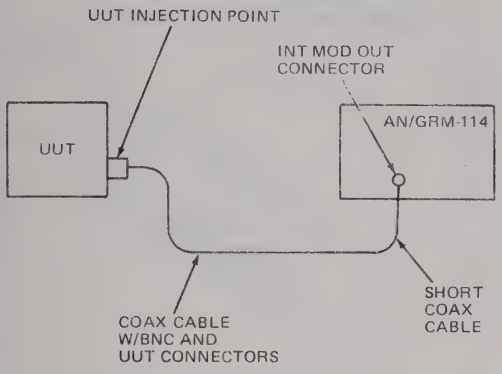

Table 4-16. Audio Generation with Oscilloscope Operating Instructions

Step	Procedure	Illustration
	CAUTION Do not exceed 200 V (peak-to-peak) to SCOPE IN connector.	
1	Connect BNC tee connector to SCOPE IN connector.	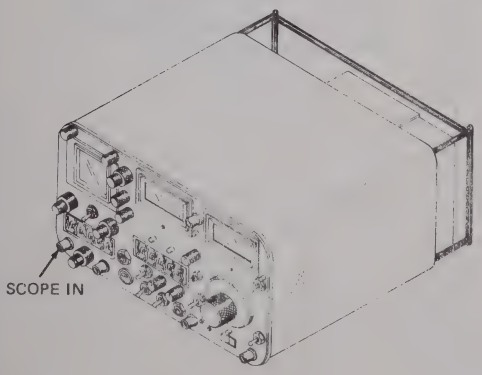

Table 4-16. Audio Generation with Oscilloscope Operating Instructions — Continued

Step	Procedure	Illustration
2	Connect one end of short coax cable to INT MOD OUT connector and opposite end to BNC tee connector previously attached to SCOPE IN connector.	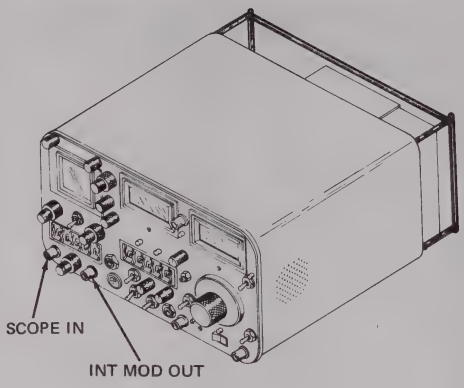
3	Apply power to UUT.	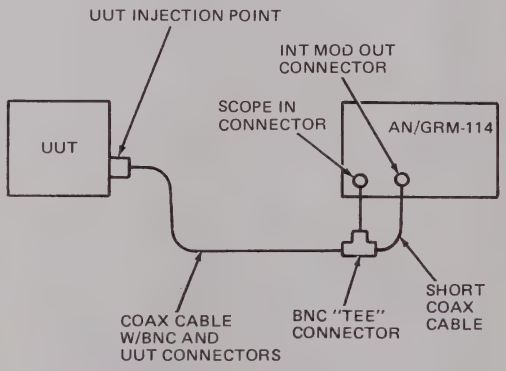
4	Apply power to AN/GRM-114 as instructed in paragraph 4-3. **CAUTION** When applying power to oscilloscope or spectrum analyzer from PWR/OFF/BATT switch or AC/DC/OFF switch, make sure INTENSITY control is in moderate (left) position.	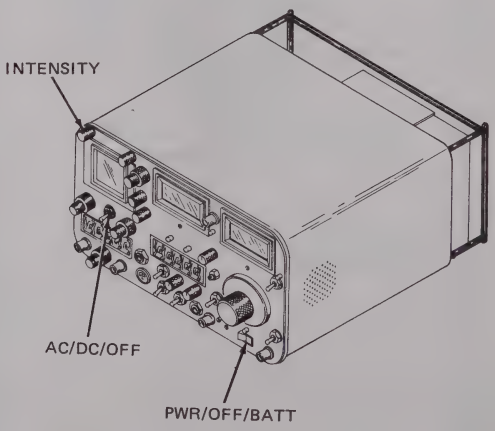

Table 4-16. Audio Generation with Oscilloscope Operating Instructions — Continued

Step	Procedure	Illustration
5	Adjust INTENSITY control cw and FOCUS control appropriately for a sharp visible trace display. NOTE Warmup time of crt is approximately 30 seconds from a "cold" startup; trace display will not become visible until crt achieves warmup.	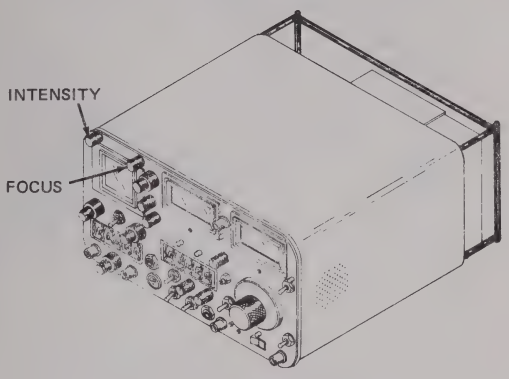
6	Adjust VERT and HORIZ controls so that the trace is centered and aligned along major horizontal axis.	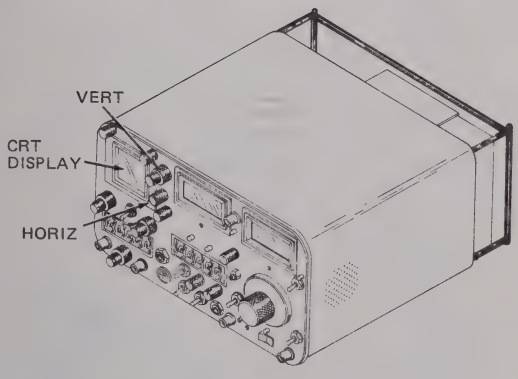

Table 4-16. Audio Generation with Oscilloscope Operating Instructions — Continued

Step	Procedure	Illustration
7	Set MODULATION FREQ Hz thumbwheels to desired audio frequency.	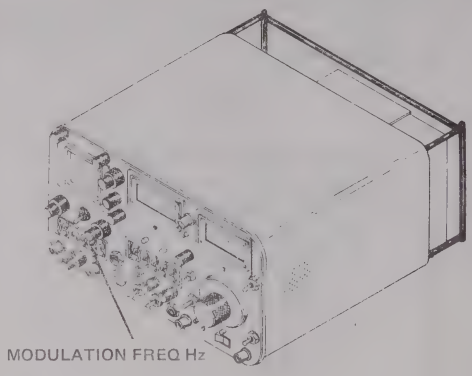
8	For calibration, the level of the injected audio tone must be expressed in volts peak-to-peak. Volts rms or volts peak must be converted to volts peak-to-peak, using following formulas: volts peak-to-peak = 2.828 x volts rms volts peak-to-peak = 2 x volts peak	
9	Rotate INT MOD Control to adjust waveform to desired amplitude in volts peak.	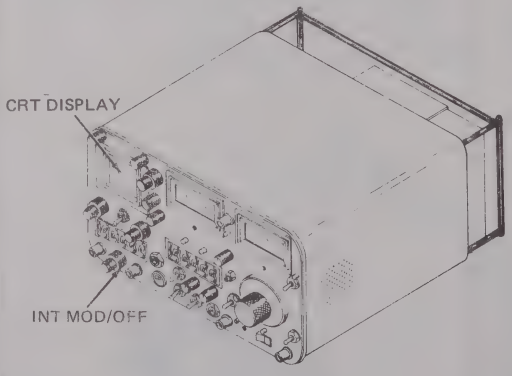

Table 4-16. Audio Generation with Oscilloscope Operating Instructions — Continued

Step	Procedure	Illustration
	CAUTION Do not exceed 200 V (peak-to-peak) to SCOPE IN connector.	
10	Connect BNC connector of remaining coax cable to tee connector attached to SCOPE IN connector. Connect opposite end of coax cable to injection point on UUT. Desired audio tone is now being injected into UUT.	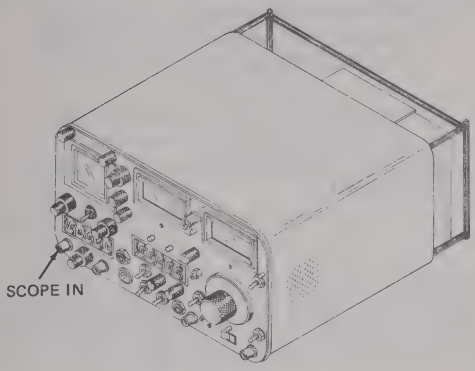 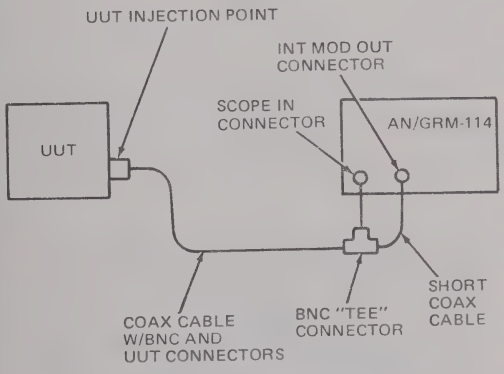
11	To monitor the injected tones, place INT MOD/RCVR switch to INT MOD and adjust VOL control for a comfortable listening level.	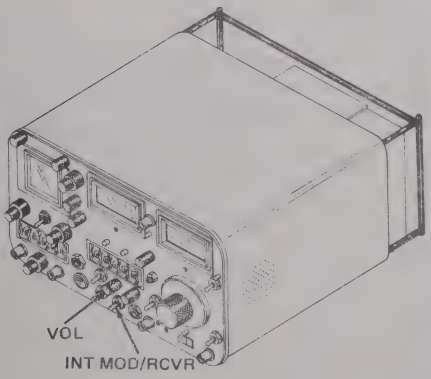

Table 4-16. Audio Generation with Oscilloscope Operating Instructions — Continued

Step	Procedure	Illustration
12	Emergency operating procedures. For emergency operating procedures (battery weakening) refer to table 4-2.	
13	Stopping procedures. Disconnect power from AN/GRM-114 as instructed in table 4-2 before disconnecting power from UUT.	

4-9. Power Monitor Function. Table 4-17 lists operating instructions for measuring transmitter carrier power. Such measurements utilize the power monitor.

4-10. Master Oscillator Calibration. Follow procedures in table 4-18 to calibrate master oscillator using a received time standard signal.

Table 4-17. Power Monitor Operating Instructions for Measuring Transmitter Carrier Power

Step	Procedure	Illustration
	NOTE To apply power to the AN/GRM-114, refer to the instructions in paragraph 4-3.	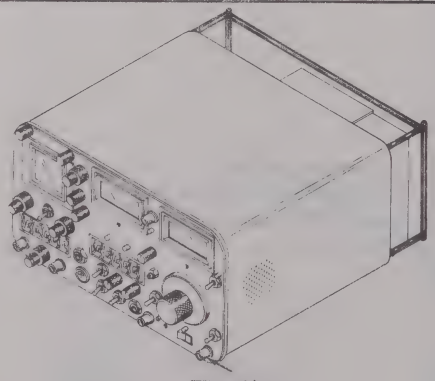
1	Set controls for receive operation (AM or FM) as listed in table 4-9.	
2	Apply power to UUT.	
3	Connect coax cable between UUT RF output and AN/GRM-114 TRANS/RCVR connector.	

Table 4-17. Power Monitor Operating Instructions for Measuring Transmitter Carrier Power — Continued

Step	Procedure	Illustration
4	Rotate DEV/PWR control to WATTS x 10. NOTE Due to various construction of buildings, a national standard (e.g. WWV) signal may not be obtained without a rooftop antenna or relocation of AN/GRM-114 to an outdoor location.	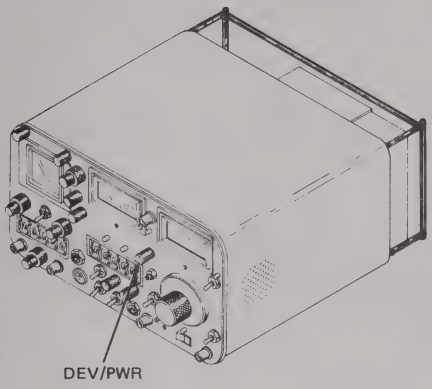
5	Key up UUT. Read UUT power output on red scale of DEVIATION (KHz)/WATTS meter. NOTE If DEVIATION (KHz)/WATTS meter needle deflection is less than 10 watts when UUT is keyed, rotate DEV/PWR control to WATTS x 1.	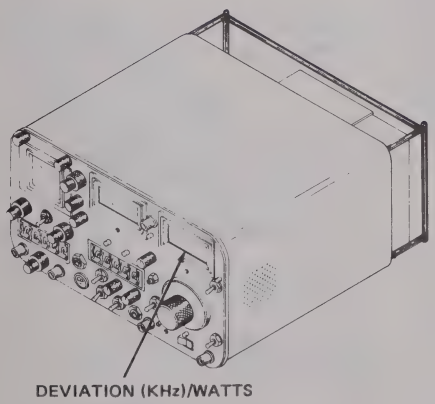

Table 4-17. Power Monitor Operating Instructions for Measuring Transmitter Carrier Power — Continued

Step	Procedure	Illustration
6	Set FREQUENCY MHz thumbwheels to frequency of transmitter.	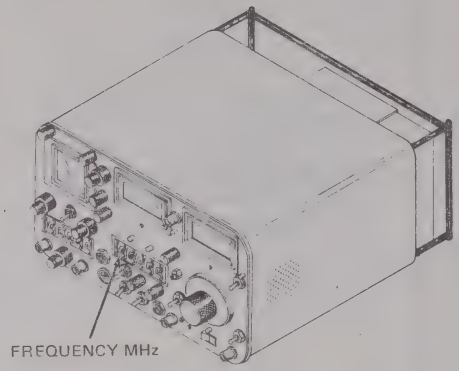
7	Set ANALY DISPR control cw just short of detent. NOTE UUT power output can also be viewed on spectrum analyzer dB scale, using following approximate equivalencies: —30 dB marking on spectrum analyzer = 100 watts, —40 dB marking on spectrum analyzer = 10 watts, —50 dB marking on spectrum analyzer = 1 watt, and —60 dB marking on spectrum analyzer = 0.1 watt.	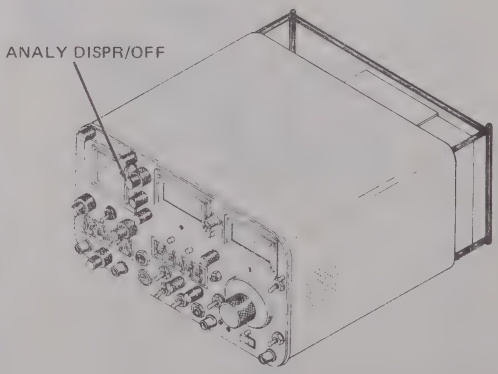

Table 4-17. Power Monitor Operating Instructions for Measuring Transmitter Carrier Power — Continued

Step	Procedure	Illustration
8	Emergency operating procedures. For emergency operating procedures (battery weakening), refer to table 4-2.	
9	Stopping procedures. Refer to the stopping procedures in table 4-2.	

Table 4-18. Master Oscillator Calibration using Received Time Standard Signal

Step	Procedure	Illustration
1	Perform the steps necessary to receive AM signals as listed under paragraph 4-6. NOTE Set AM/FM switch to AM. Set FREQUENCY MHz thumbwheels to 10.0000 MHz. Set DEV/PWR control to SIG.	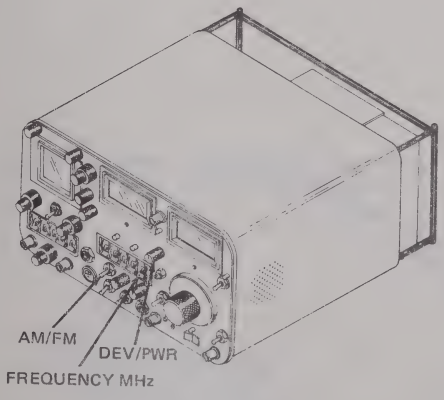
2	Set AN/GRM-114 controls for oscilloscope operation as listed in table 4-7.	

Table 4-18. Master Oscillator Calibration using Received Time Standard Signal — Continued

Step	Procedure	Illustration
3	Rotate EXT V/DIV control to 15 KHz.	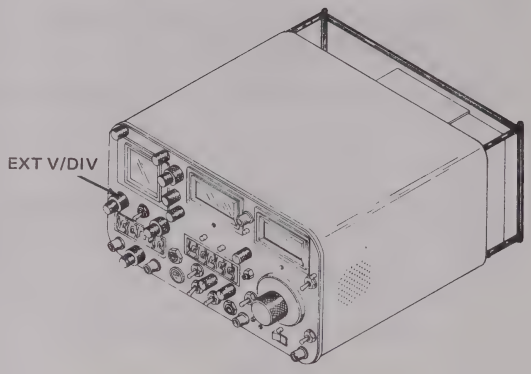
4	Insert a short length of wire into center conductor of 10 MHz REF OUT connector.	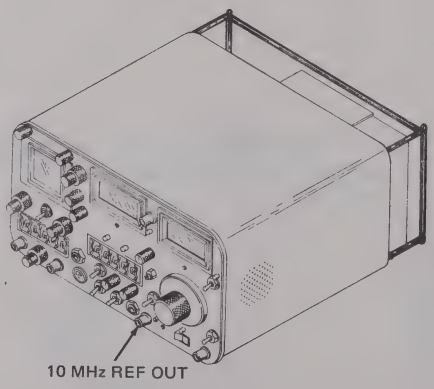

Table 4-18. Master Oscillator Calibration using Received Time Standard Signal — Continued

Step	Procedure	Illustration
5	Adjust position of wire to obtain a suitable beat note from AN/GRM-114 speaker.	
6	Using small screwdriver, adjust the 10 MHz CAL adjustment until the beat note achieves as low a frequency as possible: (a) Initially, it is helpful to observe oscillation of the waveform on the oscilloscope while rotating 10 MHz CAL adjustment; adjust screw until oscillation diminishes to a point of being as close as possible to stationary.	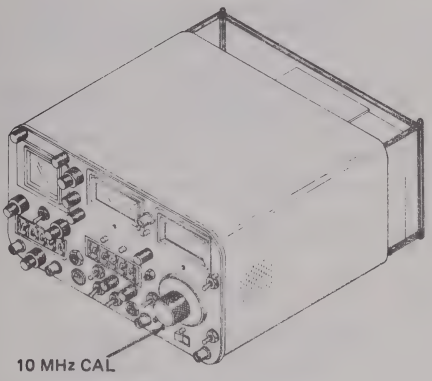
	(b) While observing DEVIATION (KHz)/ WATTS meter, continue to adjust the 10 MHz CAL adjustment until meter needle oscillation is as slow as possible. During this step, recheck oscilloscope to be sure the waveform is stable. Master oscillator is now calibrated in accordance with the time standard signal.	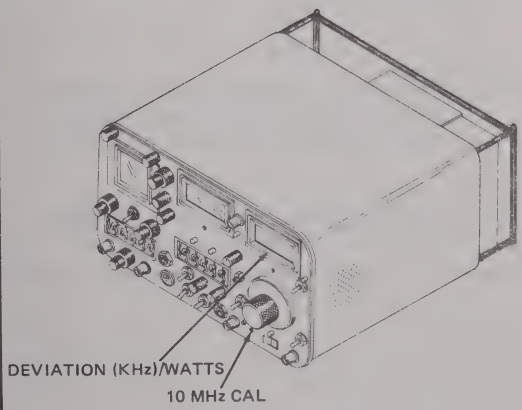

Table 4-18. Master Oscillator Calibration using Received Time Standard Signal — Continued

Step	Procedure	Illustration
6 (Cont)	NOTE Careful calibration can result in a beat frequency less than 0.1 Hz.	
7	When calibrating the master oscillator for accurate frequency reference/measurement, the FREQ. ERROR meter should also be zeroed for reliable frequency measurements. Procedure is as follows: (a) Place GEN/RCVR switch to GEN. NOTE RCVR WIDE/MID/NARROW switch must be in NARROW. (b) Make sure AUTO/OFF/ZERO, BATT switch is in AUTO. (c) Rotate 1.5/5/15 KHz control to 1.5 KHz. (d) Adjust ZERO RCVR adjustment cw or ccw to center FREQ. ERROR meter needle at zero.	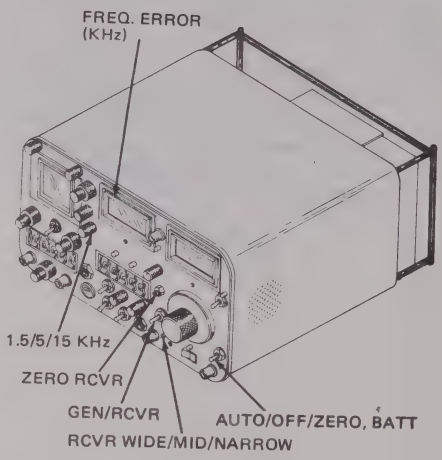
8	Emergency operating procedures. Refer to the emergency operating procedures in step 9 of table 4-10, and in table 4-2.	
9	Stopping procedures. Refer to the stopping procedures in table 4-2.	

4-11. The procedures in table 4-19 are for calibrating the master oscillator through an external source when a 10 MHz "off-the-air" reference signal is not available.

4-12. Frequency Error Measurement. Table 4-20 lists the initial adjustments and control settings (figure 4-7) necessary to measure frequency error. Table 4-21 lists the operating instructions.

Table 4-19. Master Oscillator Calibration using an External Frequency Standard

Step	Procedure	Illustration
1	Connect one end of coax cable to 10 MHz REF OUT connector.	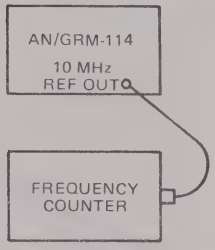
2	Connect opposite end of coax cable to input of frequency counter.	
3	Apply power to frequency counter.	
4	Apply power to AN/GRM-114 as instructed in paragraph 4-3.	
5	For most precise adjustment, wait approximately 5 minutes before proceeding with step 6.	

Table 4-19. Master Oscillator Calibration using an External Frequency Standard — Continued

Step	Procedure	Illustration
6	Adjust 10 MHz CAL adjustment until frequency counter reads 10.000000 MHz. Master oscillator is now calibrated to frequency counter.	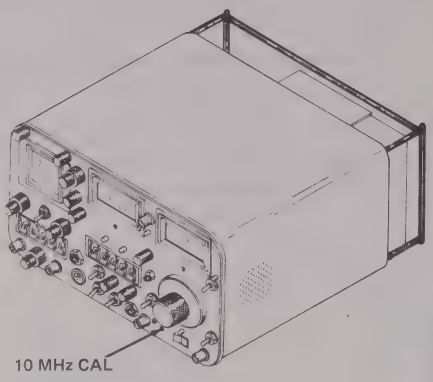
7	When calibrating the master oscillator for accurate frequency reference/ measurement, the FREQ. ERROR meter must be zeroed for reliable frequency measurements. Procedure is as follows: (a) Place GEN/RCVR switch to GEN. NOTE RCVR WIDE/MID/NARROW switch must be in NARROW. (b) Make sure AUTO/OFF/ZERO, BATT switch is in AUTO. (c) Rotate 1.5/5/15 KHz control to 1.5 KHz. (d) Adjust ZERO RCVR adjustment cw or ccw to center FREQ. ERROR meter needle at zero.	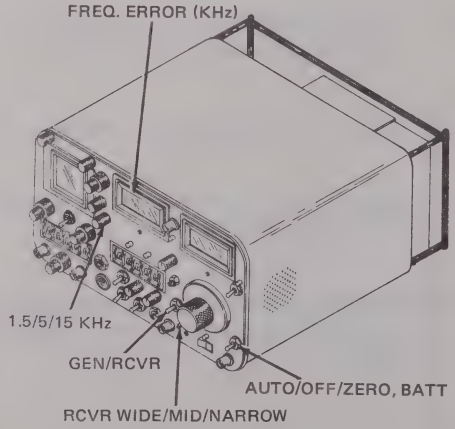

Table 4-19. Master Oscillator Calibration using an External Frequency Standard — Continued

Step	Procedure	Illustration
8	Emergency operating procedures. For emergency operating procedures (battery weakening) refer to table 4-2.	
9	Stopping procedures. Disconnect power from AN/GRM-114 as instructed in table 4-2 before disconnecting power from frequency counter.	

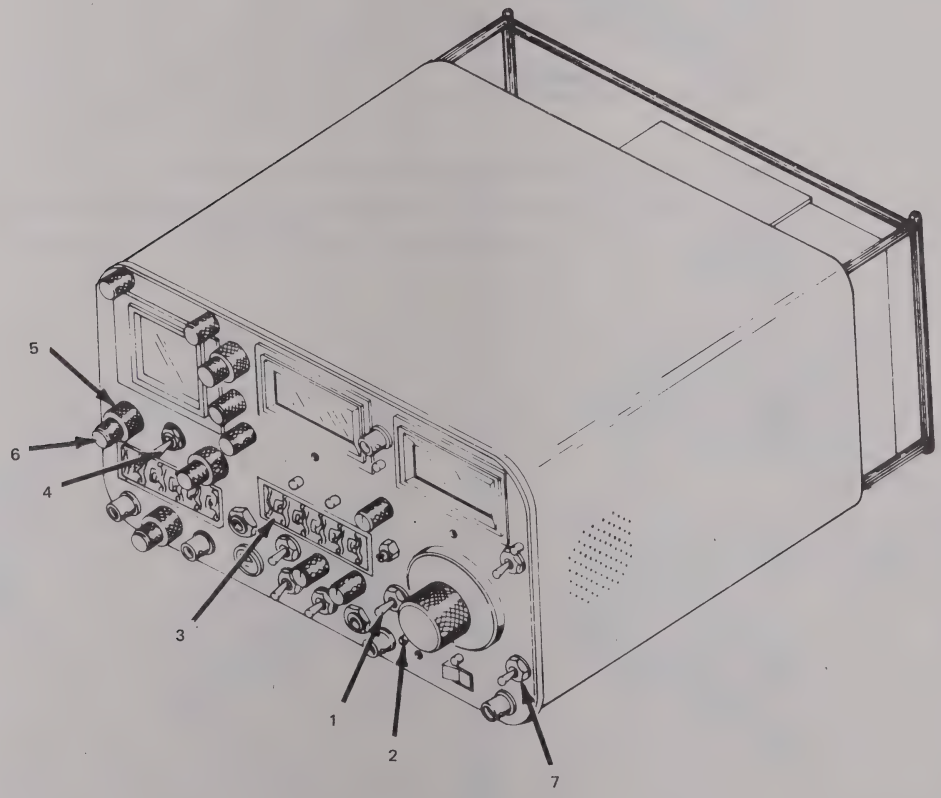

Figure 4-7. Frequency error measurement controls, indicators and connectors

Table 4-20. Initial Adjustments and Control Settings

Figure 4-7 Reference No.	Control, indicator, or connector	Initial adjustment or setting
1	GEN/RCVR switch	RCVR
2	RCVR WIDE/MID/NARROW	NARROW
3	FREQUENCY MHz thumbwheel switches	000 000 0
4	AC/DC/OFF switch	DC
5	EXT V/DIV control	15 KHz
6	EXT V/DIV vernier control	CAL
7	AUTO/OFF/ZERO, BATT switch	AUTO
8	AM/FM switch	FM

Table 4-21. Frequency Error Measurement Operating Instructions

Step	Procedure	Illustration
	CAUTION When applying power to the oscilloscope or spectrum analyzer from the PWR/OFF/BATT switch or from the AC/DC/OFF switch, make sure INTENSITY control is in moderate (left) position.	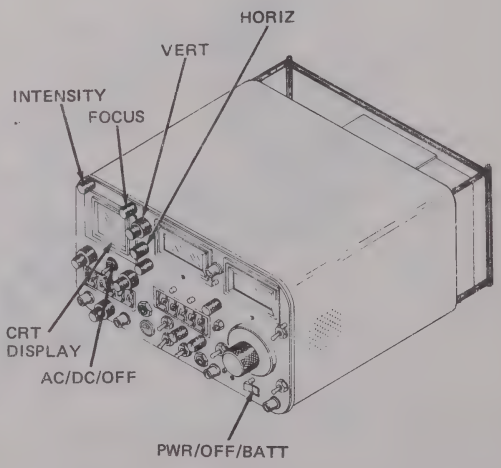
1	Center the oscilloscope trace using the HORIZ and VERT controls.	

Table 4-21. Frequency Error Measurement Operating Instructions — Continued

Step	Procedure	Illustration
2	Set the 1.5/5/15 KHz control to the 15 KHz.	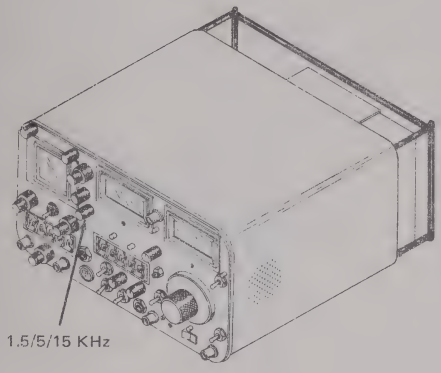
3	Set FREQUENCY MHz thumbwheel switches to 000 010 0.	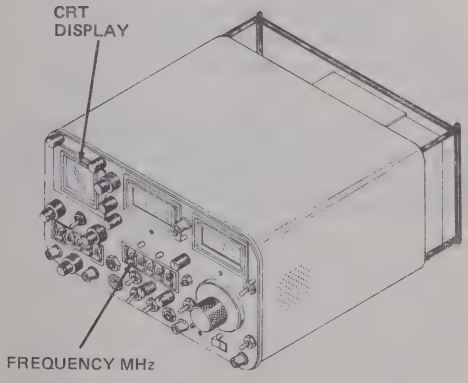

Table 4-21. Frequency Error Measurement Operating Instructions — Continued

Step	Procedure	Illustration
4	Verify that both the oscilloscope and the FREQ. ERROR (KHz) meter read —10 KHz.	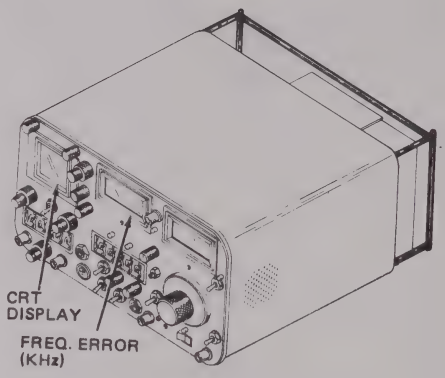
5	Other oscilloscope and FREQ. ERROR (KHz) meter ranges may be checked in the same manner.	
6	Emergency operating procedures. For emergency operating procedures (battery weakening) refer to table 4-2.	
7	Stopping procedures. Refer to the stopping procedures in table 4-2.	

4-13. Audio Frequency Monitor Function. For a demonstration of the audio frequency monitor function, refer to the audio generator operating instructions in paragraph 4-8.

4-14. Multimeter Operating Instructions. Table 4-22 lists operating instructions for the multimeter, using signals generated by the AN/GRM-114.

Table 4-22. Multimeter Operating Instructions

Step	Procedure	Illustration
	CAUTION Do not exceed 300 V into the multimeter INPUT connector.	
1	Connect the multipronged cable, which is built into the multimeter, to the EXT ACC connector.	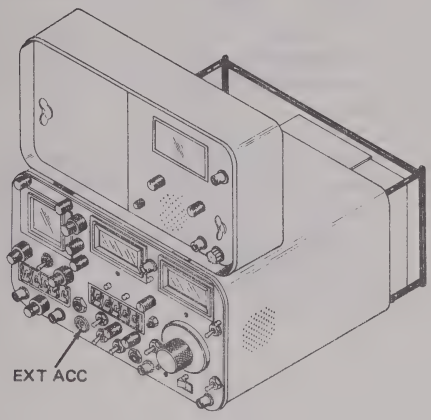
2	Connect the 2-ended BNC cable between the INT MOD OUT connector and the multimeter INPUT connector.	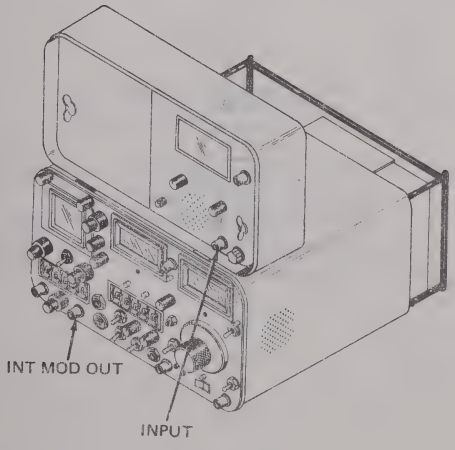

Table 4-22. Multimeter Operating Instructions — Continued

Step	Procedure	Illustration
3	To apply power to the AN/GRM-114, refer to the instructions in paragraph 4-3.	
4	To generate a signal, refer to the instructions in tables 4-3, 4-4, 4-5, and 4-6.	
5	To measure ac voltage of the generated signal, set FUNCTION control to HI-Z. Set RANGE control to the VOLTS position which gives best meter reading (top or second scale, depending on VOLTS position). Rotate INT MOD/OFF control to vary voltage.	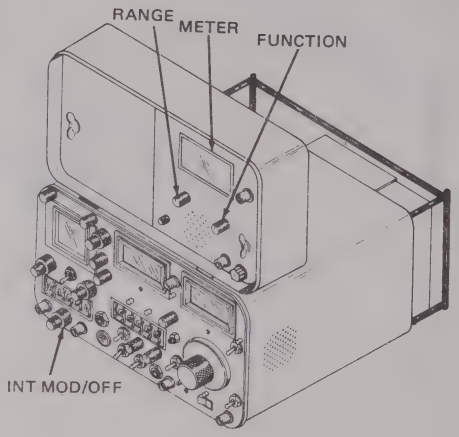
	NOTE The multimeter measures distortion of 1-kHz signals only.	
6	To measure distortion of the generated signal, set RANGE control to the DIST position which gives best meter reading (top or second scale, depending on the DIST position).	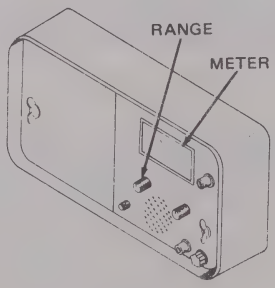

Table 4-22. Multimeter Operating Instructions — Continued

Step	Procedure	Illustration
7	To measure SINAD value of applied signal, set RANGE control to SINAD. Read value on SINAD scale of meter.	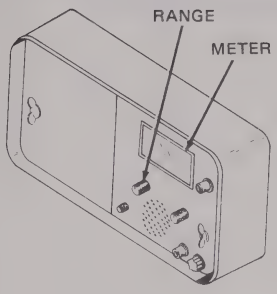
	NOTE For the following step, the AM/FM switch of the AN/GRM-114 must be in AM position. Adjust the FREQUENCY MHz thumbwheel switches to generate an AM signal.	
8	To read the AM% modulation of the applied signal, set RANGE control of multimeter to AM% position, read meter indication on top or second scale.	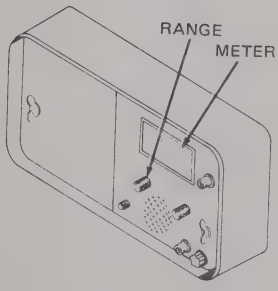

Table 4-22. Multimeter Operating Instructions — Continued

Step	Procedure	Illustration
9	Adjust INT MOD/OFF control for desired AM% modulation. Accuracy will be best with a 1-kHz signal.	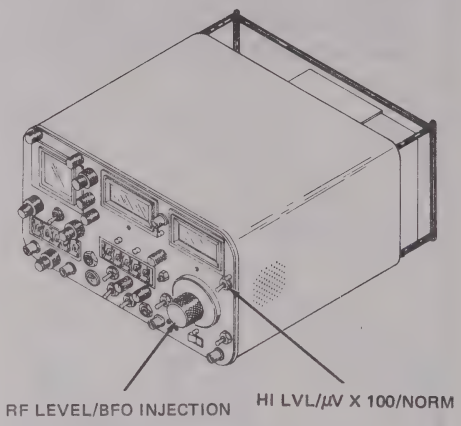
10	Adjust the VOL control for a comfortable listening level.	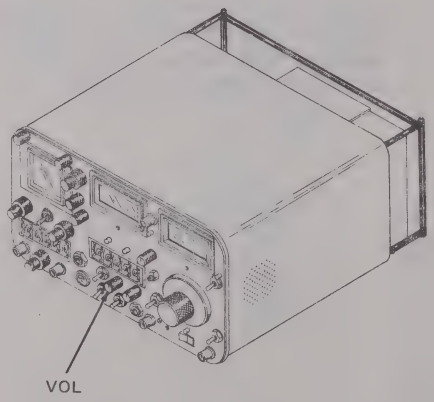

Table 4-22. Multimeter Operating Instructions — Continued

Step	Procedure	Illustration
	NOTE To measure dc voltage and resistance, a source external to the AN/GRM-114, or a battery external to the AN/GRM-114 is required. If using source external to the AN/GRM-114, connect one end of 2-ended BNC cable to INPUT connector of multimeter and one end to output of external source. Make sure power is applied to AN/GRM-114 and thus to multimeter before applying power to external sources. Then refer to instructions in tables 4-9 and 4-10. CAUTION Do not exceed 600 V ac or 800 V dc on the multimeter probe.	
11	To measure dc voltage, set FUNCTION control to + or — DC depending on voltage to be measured.	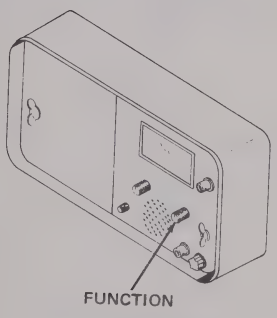

Table 4-22. Multimeter Operating Instructions — Continued

Step	Procedure	Illustration
12	Disconnect 2-ended BNC cable.	
13	Connect multimeter probe to INPUT connector.	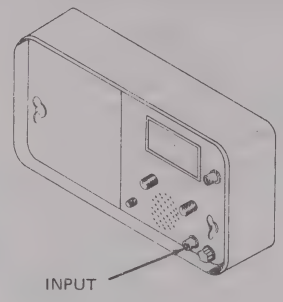
14	Set RANGE control to the VOLTS position which gives the best meter reading (on either the top or second scale, depending on VOLTS position).	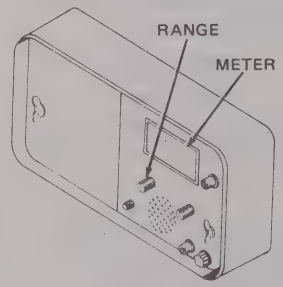
	CAUTION When no longer measuring resistance, remove FUNCTION control from OHMS (only) position. Placing multimeter probes across large voltages when in OHMS (only) position will blow multimeter fuse.	

Table 4-22. Multimeter Operating Instructions — Continued

Step	Procedure	Illustration
15	To measure resistance, set FUNCTION control to OHMS (only).	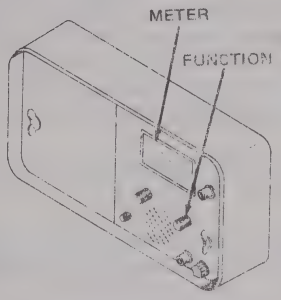
16	Connect multimeter probe across resistance to be measured.	
17	Set RANGE control to the OHMS position which gives the best meter reading (on OHMS scale).	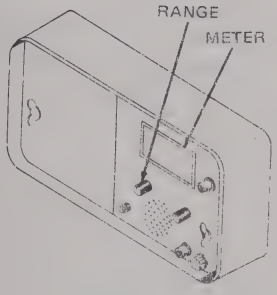

Table 4-22. Multimeter Operating Instructions — Continued

Step	Procedure	Illustration
18	Emergency operating procedures. Refer to the emergency operating procedures in step 9 of table 4-10 and in table 4-2.	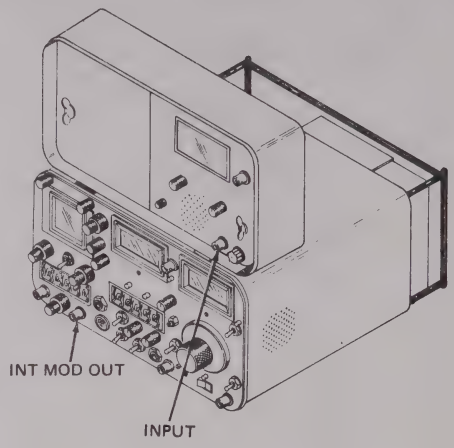
19	Stopping procedures. (a) Refer to the stopping procedures in table 4-2. (b) Disconnect BNC cable from INPUT connector of multimeter and INT MOD OUT connector of AN/GRM-114, or output of external signal source.	

CHAPTER 5

MAINTENANCE INSTRUCTIONS

WARNING

Dangerous voltages exist within the AN/GRM-114 while the unit is operating. Personnel should be familiar with the requirements of TB-385-4 before attempting maintenance.

5-1. General.

This chapter contains maintenance, troubleshooting, and disassembly/reassembly instructions.

5-2. AN/GRM-114 Routine Maintenance Checks and Services.

a. Recommended cleaning supplies: Denatured alcohol, soft bristle brush, lint-free cloth and hand controlled dry air jet (30 psi maximum pressure).

CAUTION

Use air jet cautiously to avoid damaging fragile components.

b. Remove dust and dirt from AN/GRM-114 case, thumbwheel switches, meters, and rear panel.

5-3. Tools and Test Equipment. Table 5-1 lists tools and test equipment necessary to perform the AN/GRM-114 maintenance.

Table 5-1. Tools and Test Equipment

Tool or test equipment	Tool number
NOTE Test equipment with equivalent specifications can be substituted for the items listed below.	
Oscilloscope with X10 Probe	OS-262(P)/U
Frequency Counter	TD-1225A(V)1/U
Spectrum Analyzer, with Plug-in module	141T (28480) 8555A (28480)
Variable Attenuator, Texscan	Texscan RA-50 (23042)
Digital Multimeter	AN/USM-451
High voltage probe, Calif. Instrument	Calif. Instrument HV-30 (12897)
Distortion analyzer	AN/URM-184A 334A (28480)

Table 5-1. Tools and Test Equipment — Continued

Tool or test equipment	Tool number
VSWR Bridge, Wiltron	Wiltron (60-N50) (87807)
Function Generator	SG-1133
Signal Generator	AN/USM-308(V)1
Sweep Signal Generator	Wavetek (2002) (Z3338)
Tracking generator	SG-1125/U
Triple output power supply, 50V @ 2 Amp	LAMBDA (LPT-7202FM) (80103)
50Ω termination	IFR 2650-0010-200 (51190)
Power supply, 10 to 30 V variable @ 10 Amp	LAMBDA LK351FM (80103)
Wattmeter, AN/URM-120	AN/URM-120
Modulation meter	ME-57/U
VHF transmitter	RT-524/VRC
R.F. Power meter with power detector head	42BD (04901) 41-41A (04901)
Comp assy, AGC monitor meter	IFR 7003-9801-500 (51190)
Comp assy, battery load box	IFR 1003-9801-600 (51190)
Resistor, 390 kΩ, 1/4W	IFR 4702-0394-003 (51190)
PCB assy extender, 79-80 MHz Loop	IFR 7010-9801-200 (51190)
PCB assy extender, reg & pwr supply	IFR 7010-9801-300 (51190)
PCB assy extender, 250 kHz I.F.	IFR 7010-9801-400 (51190)

Table 5-1. Tools and Test Equipment — Continued

Tool or test equipment	Tool number
Test lead BNC to SMB (2)	IFR 6050-0032-400 (51190)
Test lead BNC to SMA (2)	IFR 6050-0092-400 (51190)
Test lead BNC to BNC (2)	IFR 6050-0522-400 (51190)
Connector, SMB tee	IFR 2200-0250-100 (51190)
Connector, BNC tee	IFR 2105-1410-900 (51190)
Adapter, SMB Jack to Jack	IFR 2123-0000-016 (51190)
Adapter, SMA Jack to Jack	IFR 2200-0110-100 (51190)
High frequency multiplier/ mixer sniffer	IFR 6500-9801-700 (51190)
Extender cable (9 pin)	IFR 6046-9801-800 (51190)
Resistor, 470Ω, 1/4W	IFR 4702-0471-003 (51190)
Coax cable with sniffer loop	IFR 6050-0534-800 (51190)
Test lead SMB to SMB (2)	IFR 6050-0042-220 (51190)
Resistor, 300Ω, 1/4W	IFR 4706-3011-001 (51190)
Resistor, 300 kΩ, 1%	
Resistor, 30 kΩ, 1%	
Resistor, 600Ω, 5%	
Resistor, 150Ω, 5%	
Resistor, 8Ω, 5%	
Resistor, 3.3Ω, 5%	
Tool kit, Electronic Equipment TK-100/G	

5-4. Glossary. Table 5-2 contains a glossary of frequently used abbreviations found within this manual.

5-5. AN/GRM-114 Performance Test.

a. *General.* Figure 5-2 and tables 5-3 and 5-4 provide performance testing information for the AN/GRM-114. These procedures set forth specific requirements that the unit must meet before it is returned to the using organization. The procedures may be used as minimum performance tests or used to confirm a fault within a unit suspected of failure. Isolation of a confirmed fault is provided in the troubleshooting section of paragraph 5-6.

b. *Presentation.* The performance test provided is given in the form of a flowchart. Follow the step-by-step directions given within this flowchart. Set switches on the AN/GRM-114 according to tables 5-3 and 5-4 only when these tables are referenced within the flowchart. Any dashed number located inside a connector circle refers to a figure number within the troubleshooting section of paragraph 5-6. Figure 5-1 is an example of the application of flowchart symbols. Refer to this figure when necessary.

Table 5-2. Glossary of Abbreviations (Sheet 1 of 2).

Abbr.	Definition
A	Ampere
ac	alternating current
adj	adjust
AM	amplitude modulation
ampl	amplifier
ant	antenna
assy	assembly
atten	attenuator
bd	board
batt	battery
BFO	beat-frequency oscillator
ckt	circuit
cw	clockwise
ccw	counterclockwise
CRT	Cathode-ray tube
dB	decibel
dBm	decibel, referred to 1 milliwatt
dc	direct current
DCR	duty cycle regulator
devn	deviation
div	division
ext	external
FM	frequency modulation
freq.	frequency
gen	generate, generator
Het. amp	heterodyne amplifier
ht	height
horiz	horizontal
Hz	Hertz
inj	inject, injection
intl	internal
kHz	kilohertz
L.O.	local oscillator
mA	milliamp
mS	millisecond
mV	millivolt

Table 5-2. Glossary of Abbreviations (Sheet 2 of 2).

Abbr.	Definition
maj	major
min	minor
MHz	megahertz
mod	modulation
NLT	not less than
NMT	not more than
norm	normal
osc	oscillate, oscillator
P.C.B.	printed circuit board
p-p	peak to peak
rf	radio frequency
rms	root mean square
SA	spectrum analyzer
sig	signal
tcxo	temperature-compensated crystal oscillator
T.P.	test point
μV	microvolt
V ac	volts, alternating current
V.C.O.	voltage controlled oscillator
V dc	volts, direct current
V/DIV	volts per division
V p-p	volts, peak to peak
V rms	volts, root mean square
vert	vertical
vol	volume
W	watt
xtal	crystal
<	less than
>	greater than

Table 5-3. AN/GRM-114 Performance Test - Initial Conditions.

Step	AN/GRM-114 setting
1.	INTENSITY control to 3 o'clock position
2.	EXT V/DIV switch to 15 KHz
3.	EXT V/DIV vernier to CAL
4.	AC/DC switch to DC
5.	SWEEP switch to 1 mS
6.	SWEEP vernier to CAL
7.	MODULATION FREQ Hz switches to 1000.0
8.	INT MOD control to OFF
9.	1 KHz INT MOD control to OFF
10.	VERT control to 12 o'clock position
11.	ANALY DISPR control ccw to OFF
12.	HORIZ control to 12 o'clock position
13.	1.5/1.5/15 KHz switch to 15
14.	AM/FM switch to AM
15.	BFO switch to OFF

Table 5-3. AN/GRM-114 Performance Test - Initial Conditions — Continued.

Step	AN/GRM-114 setting
16.	FREQUENCY MHz switch to 111 000 0
17.	VOL control to 9 o'clock position
18.	INT MOD/RCVR switch to RCVR
19.	SQUELCH control ccw to detent stop (not off)
20.	DEV/PWR switch to SIG
21.	GEN/RCVR switch to RCVR
22.	RCVR WIDE/MID/NARROW switch to NARROW
23.	RF LEVEL/BFO INJECTION dial to 10
24.	HI LVL/NORM switch to NORM
25.	AUTO/ZERO, BATT switch to AUTO
26.	Plug line cord into an active AC outlet.

Table 5-4. AN/GRM-114 Performance Test - Initial Conditions.

Step	AN/GRM-114 setting
1.	INT MOD control to OFF
2.	1 KHz INT MOD control to OFF
3.	GEN/RCVR switch to GEN
4.	INT MOD/RCVR switch to RCVR
5.	HI LVL/NORM switch to μV x 100
6.	FREQUENCY MHz switches to 000 050 0
7.	RF LEVEL/BFO INJECTION dial to 10
8.	EXT V/DIV switch to .01
9.	1.5/5/15 KHz switch to 15

5-6. AN/GRM-114 Troubleshooting.

a. *General.* Figures 5-3 through 5-12, and tables 5-5 through 5-9 provide troubleshooting information for the AN/GRM-114. These procedures set forth specific methods to isolate a problem to a mechanical assembly or circuit board. The technician is then referred back to the performance test of figure 5-2. Use these procedures as a guide to problem isolation.

b. *Presentation.* The troubleshooting procedures provided are given in the form of flowcharts. Follow the step-by-step directions given within these flowcharts. Set switches on the AN/GRM-114 according to tables 5-5, 5-7, and 5-9 only when these tables are referenced within the flowcharts. Perform these troubleshooting procedures when referenced by their figure number from the performance test of figure 5-2, or when a problem is apparent in one of the assemblies covered. Figure 5-1 is an example of the application of flowchart symbols. When necessary refer to component location diagrams located at the end of the alignment procedures to find referenced connectors, jacks, and potentiometers.

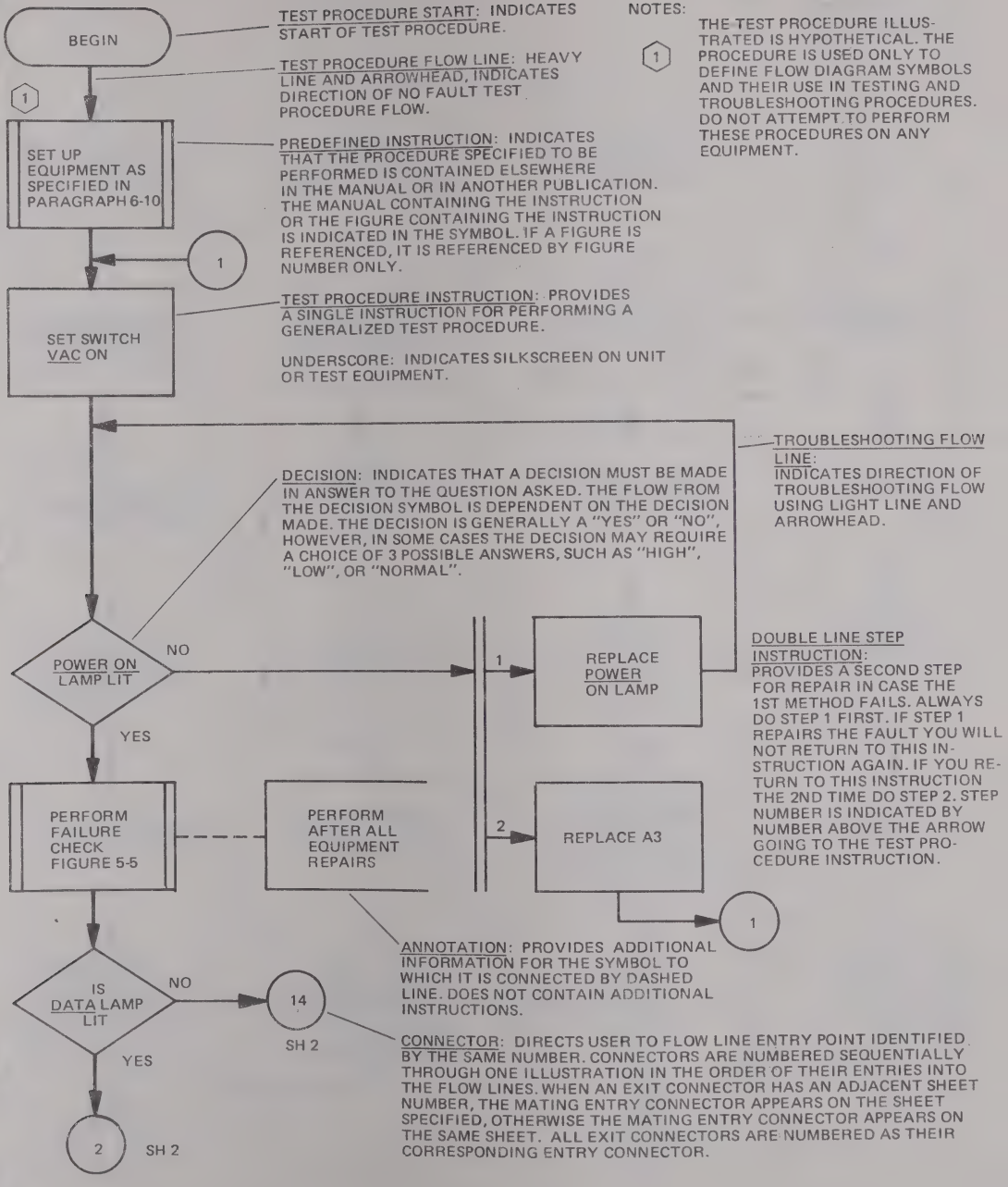
BEGIN
TEST PROCEDURE START: INDICATES START OF TEST PROCEDURE.
TEST PROCEDURE FLOW LINE: HEAVY LINE AND ARROWHEAD, INDICATES DIRECTION OF NO FAULT TEST PROCEDURE FLOW.
NOTES:
1
THE TEST PROCEDURE ILLUSTRATED IS HYPOTHETICAL. THE PROCEDURE IS USED ONLY TO DEFINE FLOW DIAGRAM SYMBOLS AND THEIR USE IN TESTING AND TROUBLESHOOTING PROCEDURES. DO NOT ATTEMPT TO PERFORM THESE PROCEDURES ON ANY EQUIPMENT.
SET UP EQUIPMENT AS SPECIFIED IN PARAGRAPH 6-10
PREDEFINED INSTRUCTION: INDICATES THAT THE PROCEDURE SPECIFIED TO BE PERFORMED IS CONTAINED ELSEWHERE IN THE MANUAL OR IN ANOTHER PUBLICATION. THE MANUAL CONTAINING THE INSTRUCTION OR THE FIGURE CONTAINING THE INSTRUCTION IS INDICATED IN THE SYMBOL. IF A FIGURE IS REFERENCED, IT IS REFERENCED BY FIGURE NUMBER ONLY.
SET SWITCH VAC ON
TEST PROCEDURE INSTRUCTION: PROVIDES A SINGLE INSTRUCTION FOR PERFORMING A GENERALIZED TEST PROCEDURE.
UNDERSCORE: INDICATES SILKSCREEN ON UNIT OR TEST EQUIPMENT.
TROUBLESHOOTING FLOW LINE: INDICATES DIRECTION OF TROUBLESHOOTING FLOW USING LIGHT LINE AND ARROWHEAD.
DECISION: INDICATES THAT A DECISION MUST BE MADE IN ANSWER TO THE QUESTION ASKED. THE FLOW FROM THE DECISION SYMBOL IS DEPENDENT ON THE DECISION MADE. THE DECISION IS GENERALLY A "YES" OR "NO", HOWEVER, IN SOME CASES THE DECISION MAY REQUIRE A CHOICE OF 3 POSSIBLE ANSWERS, SUCH AS "HIGH", "LOW", OR "NORMAL".
POWER ON LAMP LIT
NO
YES
1
REPLACE POWER ON LAMP
DOUBLE LINE STEP INSTRUCTION: PROVIDES A SECOND STEP FOR REPAIR IN CASE THE 1ST METHOD FAILS. ALWAYS DO STEP 1 FIRST. IF STEP 1 REPAIRS THE FAULT YOU WILL NOT RETURN TO THIS INSTRUCTION AGAIN. IF YOU RETURN TO THIS INSTRUCTION THE 2ND TIME DO STEP 2. STEP NUMBER IS INDICATED BY NUMBER ABOVE THE ARROW GOING TO THE TEST PROCEDURE INSTRUCTION.
PERFORM FAILURE CHECK FIGURE 5-5
PERFORM AFTER ALL EQUIPMENT REPAIRS
2
REPLACE A3
1
ANNOTATION: PROVIDES ADDITIONAL INFORMATION FOR THE SYMBOL TO WHICH IT IS CONNECTED BY DASHED LINE. DOES NOT CONTAIN ADDITIONAL INSTRUCTIONS.
IS DATA LAMP LIT
NO
14
SH 2
YES
2
SH 2
CONNECTOR: DIRECTS USER TO FLOW LINE ENTRY POINT IDENTIFIED BY THE SAME NUMBER. CONNECTORS ARE NUMBERED SEQUENTIALLY THROUGH ONE ILLUSTRATION IN THE ORDER OF THEIR ENTRIES INTO THE FLOW LINES. WHEN AN EXIT CONNECTOR HAS AN ADJACENT SHEET NUMBER, THE MATING ENTRY CONNECTOR APPEARS ON THE SHEET SPECIFIED, OTHERWISE THE MATING ENTRY CONNECTOR APPEARS ON THE SAME SHEET. ALL EXIT CONNECTORS ARE NUMBERED AS THEIR CORRESPONDING ENTRY CONNECTOR.

Figure 5-1. Flowchart symbol application.

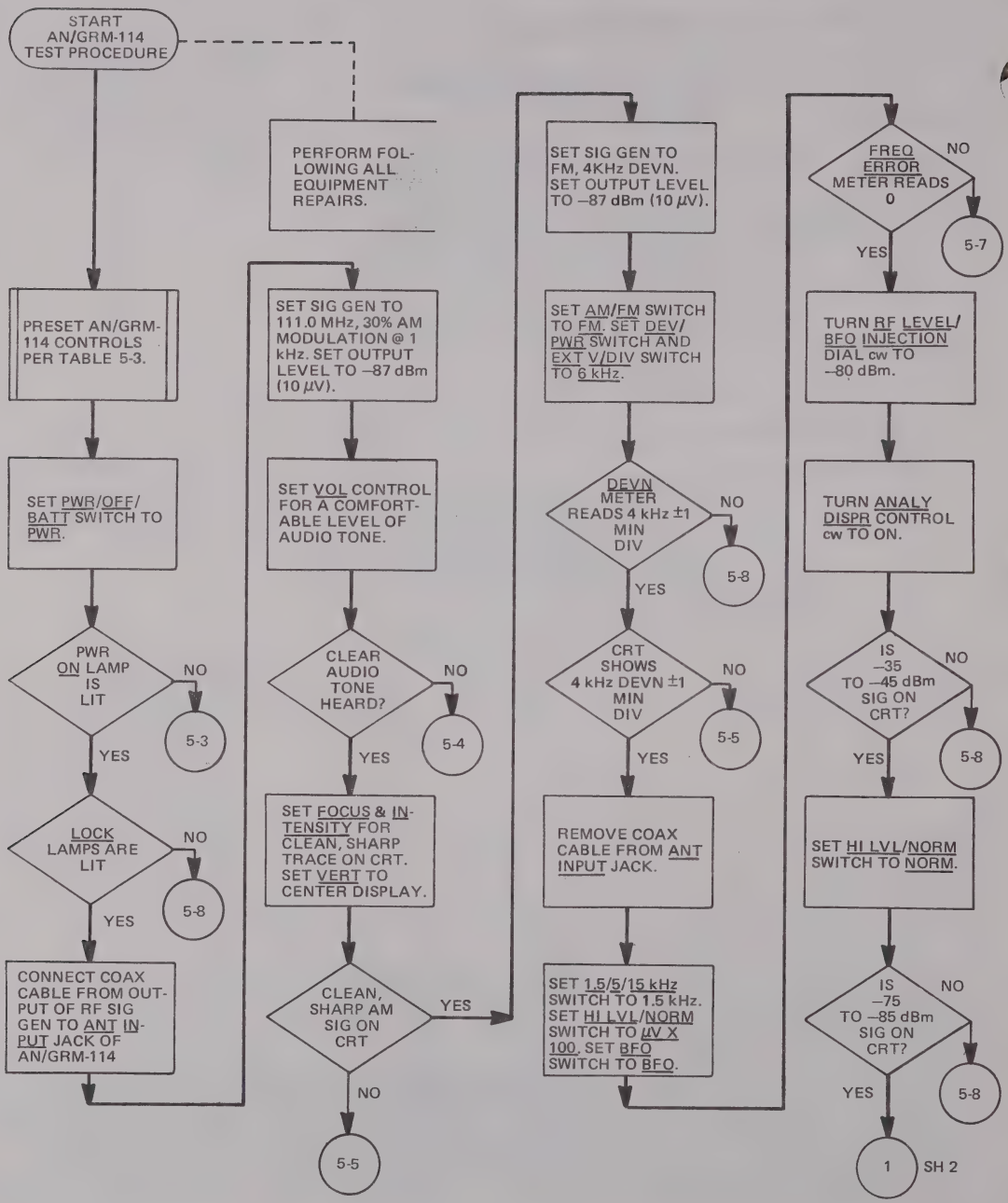
START AN/GRM-114 TEST PROCEDURE
PERFORM FOLLOWING ALL EQUIPMENT REPAIRS.
PRESET AN/GRM-114 CONTROLS PER TABLE 5-3.
SET PWR/OFF/BATT SWITCH TO PWR.
PWR ON LAMP IS LIT
NO
5-3
YES
LOCK LAMPS ARE LIT
NO
5-8
YES
CONNECT COAX CABLE FROM OUTPUT OF RF SIG GEN TO ANT INPUT JACK OF AN/GRM-114
SET SIG GEN TO 111.0 MHz, 30% AM MODULATION @ 1 kHz. SET OUTPUT LEVEL TO –87 dBm (10 μV).
SET VOL CONTROL FOR A COMFORTABLE LEVEL OF AUDIO TONE.
CLEAR AUDIO TONE HEARD?
NO
5-4
YES
SET FOCUS & INTENSITY FOR CLEAN, SHARP TRACE ON CRT. SET VERT TO CENTER DISPLAY.
CLEAN, SHARP AM SIG ON CRT
YES
NO
5-5
SET SIG GEN TO FM, 4KHz DEVN. SET OUTPUT LEVEL TO –87 dBm (10 μV).
SET AM/FM SWITCH TO FM. SET DEV/PWR SWITCH AND EXT V/DIV SWITCH TO 6 kHz.
DEVN METER READS 4 kHz ±1 MIN DIV
NO
5-8
YES
CRT SHOWS 4 kHz DEVN ±1 MIN DIV
NO
5-5
YES
REMOVE COAX CABLE FROM ANT INPUT JACK.
SET 1.5/5/15 kHz SWITCH TO 1.5 kHz. SET HI LVL/NORM SWITCH TO μV X 100. SET BFO SWITCH TO BFO.
FREQ ERROR METER READS 0
NO
5-7
YES
TURN RF LEVEL/BFO INJECTION DIAL cw TO –80 dBm.
TURN ANALY DISPR CONTROL cw TO ON.
IS –35 TO –45 dBm SIG ON CRT?
NO
5-8
YES
SET HI LVL/NORM SWITCH TO NORM.
IS –75 TO –85 dBm SIG ON CRT?
NO
5-8
YES
1
SH 2

Figure 5-2. AN/GRM-114 performance test (sheet 1 of 13).

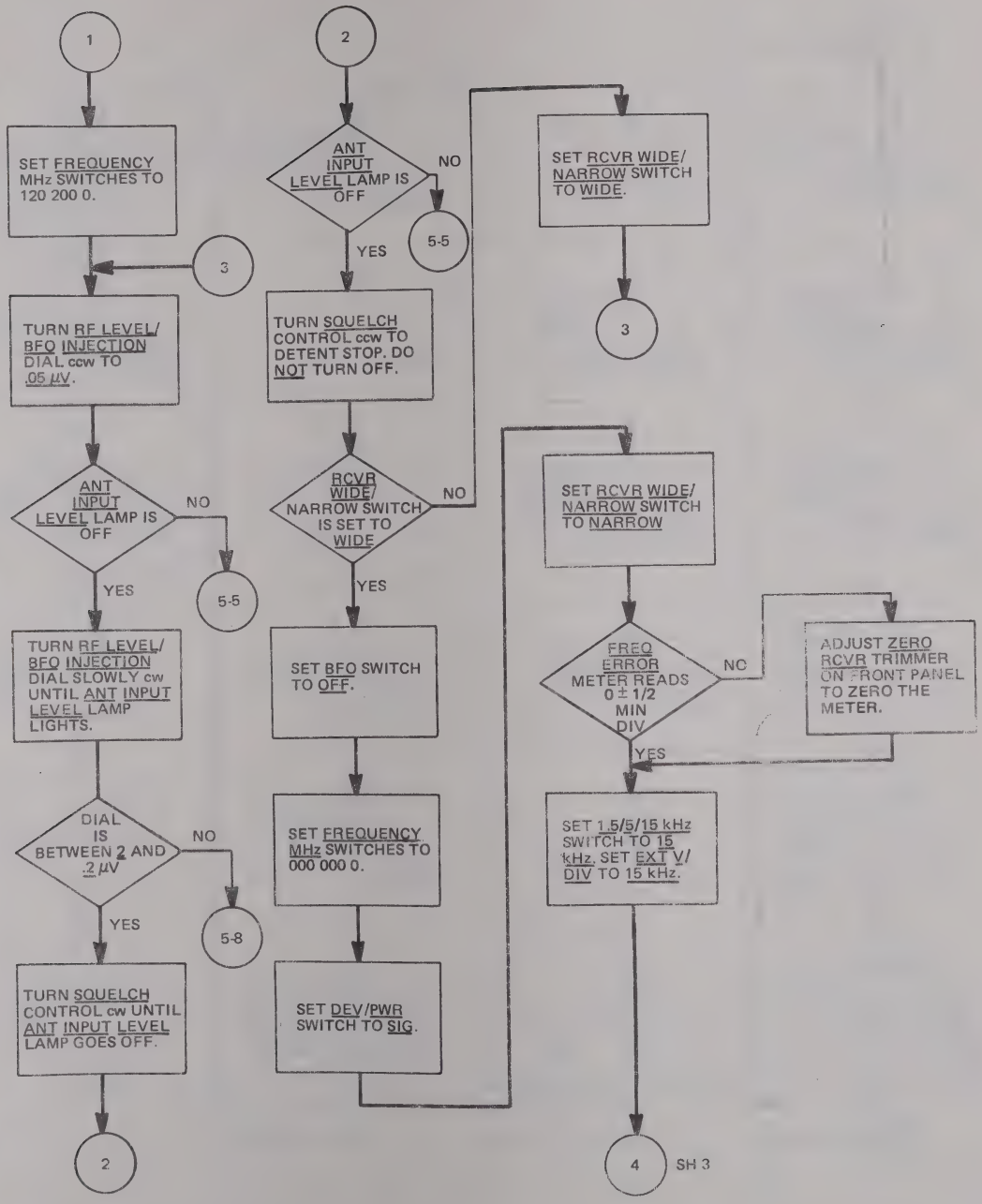
1
SET FREQUENCY MHz SWITCHES TO 120 200 0.
3
TURN RF LEVEL/ BFO INJECTION DIAL ccw TO .05 µV.
ANT INPUT LEVEL LAMP IS OFF
NO
5-5
YES
TURN RF LEVEL/ BFO INJECTION DIAL SLOWLY cw UNTIL ANT INPUT LEVEL LAMP LIGHTS.
DIAL IS BETWEEN 2 AND .2 µV
NO
5-8
YES
TURN SQUELCH CONTROL cw UNTIL ANT INPUT LEVEL LAMP GOES OFF.
2
2
ANT INPUT LEVEL LAMP IS OFF
NO
5-5
YES
TURN SQUELCH CONTROL ccw TO DETENT STOP. DO NOT TURN OFF.
RCVR WIDE/ NARROW SWITCH IS SET TO WIDE
NO
YES
SET BFO SWITCH TO OFF.
SET FREQUENCY MHz SWITCHES TO 000 000 0.
SET DEV/PWR SWITCH TO SIG.
SET RCVR WIDE/ NARROW SWITCH TO WIDE.
3
SET RCVR WIDE/ NARROW SWITCH TO NARROW
FREQ ERROR METER READS 0 ± 1/2 MIN DIV
NO
ADJUST ZERO RCVR TRIMMER ON FRONT PANEL TO ZERO THE METER.
YES
SET 1.5/5/15 kHz SWITCH TO 15 kHz. SET EXT V/ DIV TO 15 kHz.
4
SH 3

Figure 5-2. AN/GRM-114 performance test (sheet 2 of 13).

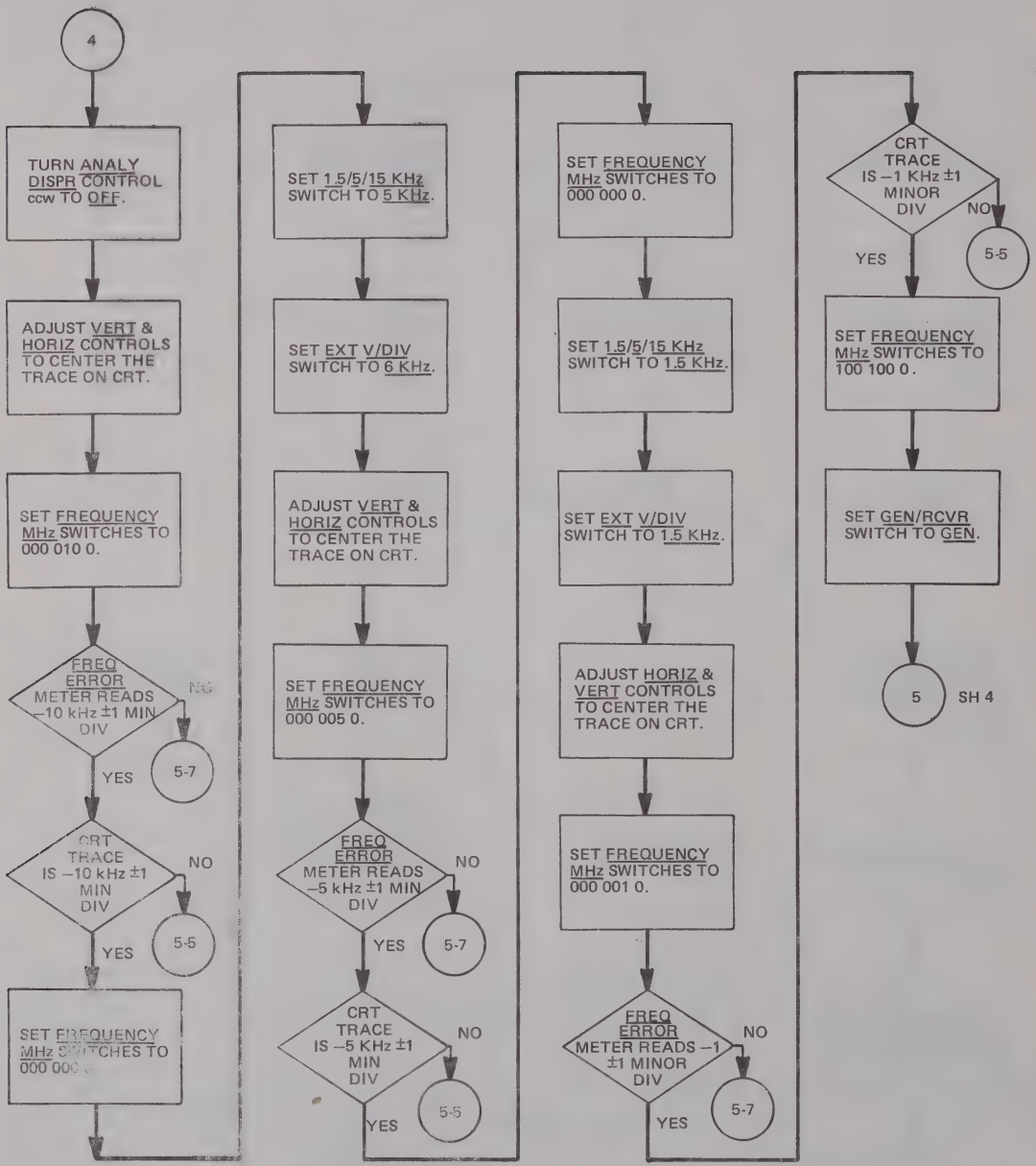
4
TURN ANALY DISPR CONTROL ccw TO OFF.
ADJUST VERT & HORIZ CONTROLS TO CENTER THE TRACE ON CRT.
SET FREQUENCY MHz SWITCHES TO 000 010 0.
FREQ ERROR METER READS –10 kHz ±1 MIN DIV
NO
YES
5-7
CRT TRACE IS –10 kHz ±1 MIN DIV
NO
YES
5-5
SET FREQUENCY MHz SWITCHES TO 000 000 0.
SET 1.5/5/15 KHz SWITCH TO 5 KHz.
SET EXT V/DIV SWITCH TO 6 KHz.
ADJUST VERT & HORIZ CONTROLS TO CENTER THE TRACE ON CRT.
SET FREQUENCY MHz SWITCHES TO 000 005 0.
FREQ ERROR METER READS –5 kHz ±1 MIN DIV
NO
YES
5-7
CRT TRACE IS –5 KHz ±1 MIN DIV
NO
YES
5-5
SET FREQUENCY MHz SWITCHES TO 000 000 0.
SET 1.5/5/15 KHz SWITCH TO 1.5 KHz.
SET EXT V/DIV SWITCH TO 1.5 KHz.
ADJUST HORIZ & VERT CONTROLS TO CENTER THE TRACE ON CRT.
SET FREQUENCY MHz SWITCHES TO 000 001 0.
FREQ ERROR METER READS –1 ±1 MINOR DIV
NO
YES
5-7
CRT TRACE IS –1 KHz ±1 MINOR DIV
NO
YES
5-5
SET FREQUENCY MHz SWITCHES TO 100 100 0.
SET GEN/RCVR SWITCH TO GEN.
5
SH 4

Figure 5-2. AN/GRM-114 performance test (sheet 3 of 13).

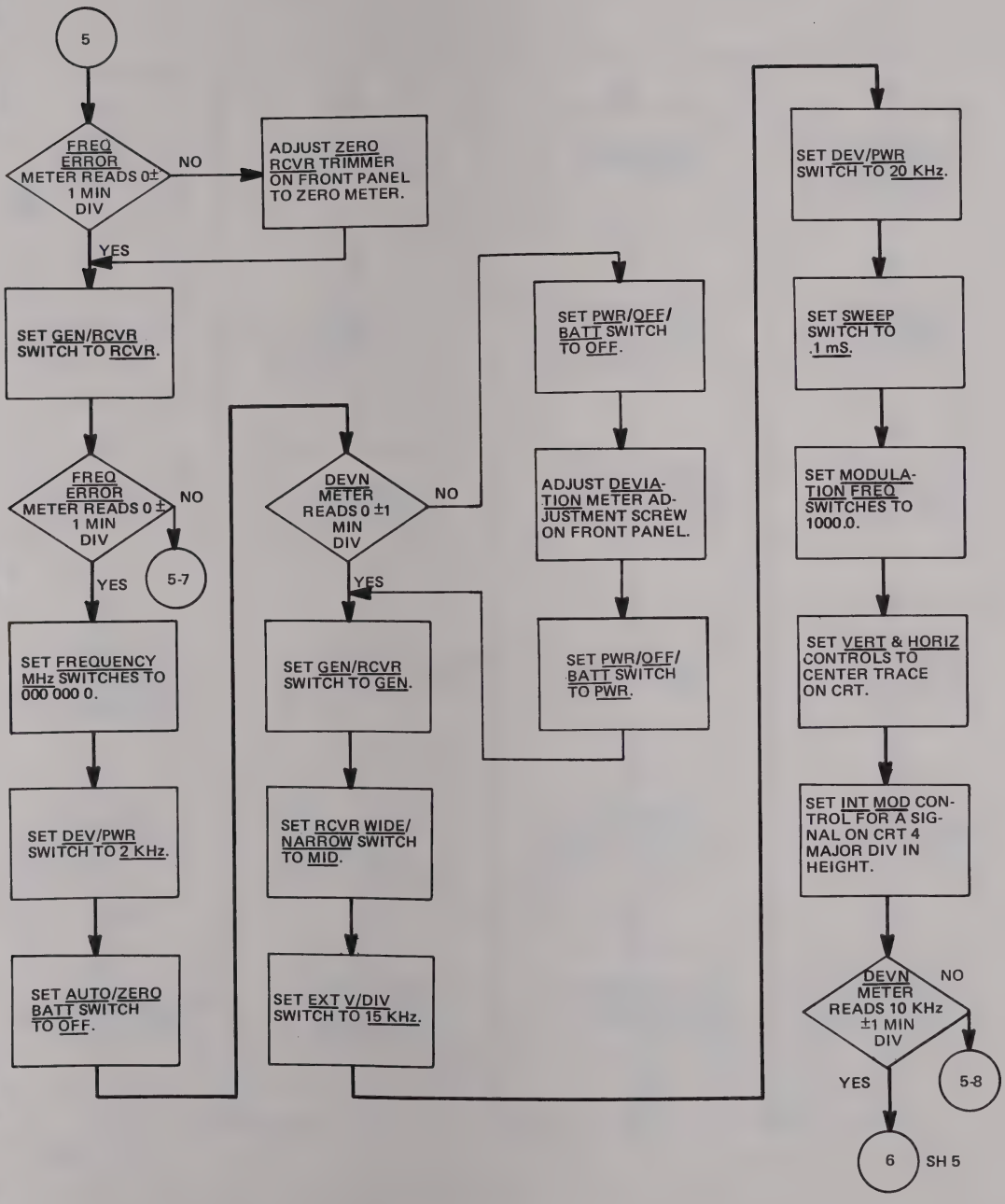
5
FREQ ERROR METER READS 0± 1 MIN DIV
NO
ADJUST ZERO RCVR TRIMMER ON FRONT PANEL TO ZERO METER.
YES
SET GEN/RCVR SWITCH TO RCVR.
FREQ ERROR METER READS 0 ± 1 MIN DIV
NO
5-7
YES
SET FREQUENCY MHz SWITCHES TO 000 000 0.
SET DEV/PWR SWITCH TO 2 KHz.
SET AUTO/ZERO BATT SWITCH TO OFF.
DEVN METER READS 0 ±1 MIN DIV
NO
YES
SET GEN/RCVR SWITCH TO GEN.
SET RCVR WIDE/ NARROW SWITCH TO MID.
SET EXT V/DIV SWITCH TO 15 KHz.
SET PWR/OFF/ BATT SWITCH TO OFF.
ADJUST DEVIATION METER ADJUSTMENT SCREW ON FRONT PANEL.
SET PWR/OFF/ BATT SWITCH TO PWR.
SET DEV/PWR SWITCH TO 20 KHz.
SET SWEEP SWITCH TO .1 mS.
SET MODULATION FREQ SWITCHES TO 1000.0.
SET VERT & HORIZ CONTROLS TO CENTER TRACE ON CRT.
SET INT MOD CONTROL FOR A SIGNAL ON CRT 4 MAJOR DIV IN HEIGHT.
DEVN METER READS 10 KHz ±1 MIN DIV
NO
YES
5-8
6
SH 5

Figure 5-2. AN/GRM-114 performance test (sheet 4 of 13).

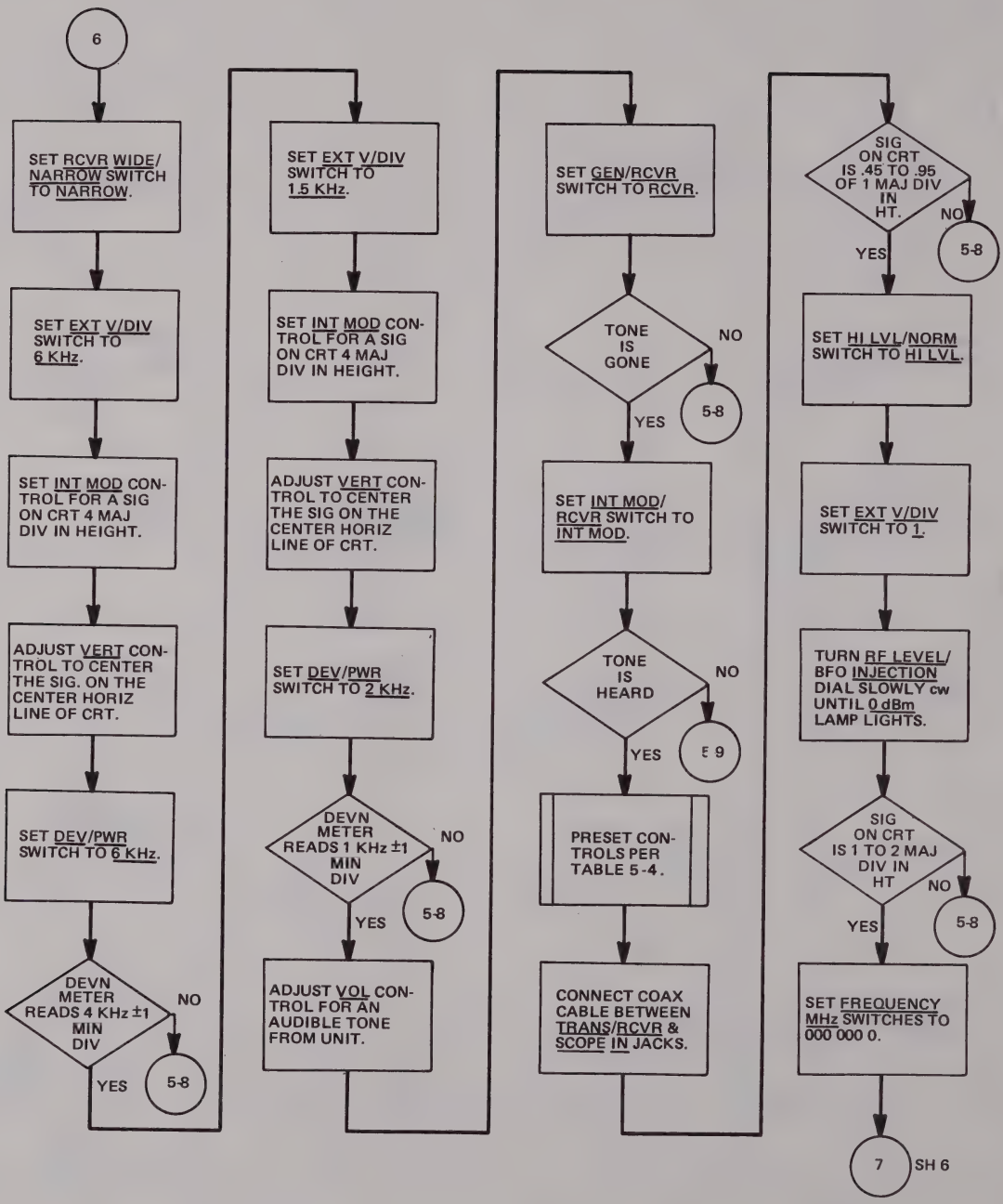
6
SET RCVR WIDE/ NARROW SWITCH TO NARROW.
SET EXT V/DIV SWITCH TO 6 KHz.
SET INT MOD CONTROL FOR A SIG ON CRT 4 MAJ DIV IN HEIGHT.
ADJUST VERT CONTROL TO CENTER THE SIG. ON THE CENTER HORIZ LINE OF CRT.
SET DEV/PWR SWITCH TO 6 KHz.
DEVN METER READS 4 KHz ±1 MIN DIV
NO
YES
5-8
SET EXT V/DIV SWITCH TO 1.5 KHz.
SET INT MOD CONTROL FOR A SIG ON CRT 4 MAJ DIV IN HEIGHT.
ADJUST VERT CONTROL TO CENTER THE SIG ON THE CENTER HORIZ LINE OF CRT.
SET DEV/PWR SWITCH TO 2 KHz.
DEVN METER READS 1 KHz ±1 MIN DIV
NO
YES
5-8
ADJUST VOL CONTROL FOR AN AUDIBLE TONE FROM UNIT.
SET GEN/RCVR SWITCH TO RCVR.
TONE IS GONE
NO
YES
5-8
SET INT MOD/ RCVR SWITCH TO INT MOD.
TONE IS HEARD
NO
YES
5-9
PRESET CONTROLS PER TABLE 5-4.
CONNECT COAX CABLE BETWEEN TRANS/RCVR & SCOPE IN JACKS.
SIG ON CRT IS .45 TO .95 OF 1 MAJ DIV IN HT.
NO
YES
5-8
SET HI LVL/NORM SWITCH TO HI LVL.
SET EXT V/DIV SWITCH TO 1.
TURN RF LEVEL/ BFO INJECTION DIAL SLOWLY cw UNTIL 0 dBm LAMP LIGHTS.
SIG ON CRT IS 1 TO 2 MAJ DIV IN HT
NO
YES
5-8
SET FREQUENCY MHz SWITCHES TO 000 000 0.
7
SH 6

Figure 5-2. AN/GRM-114 performance test (sheet 5 of 13).

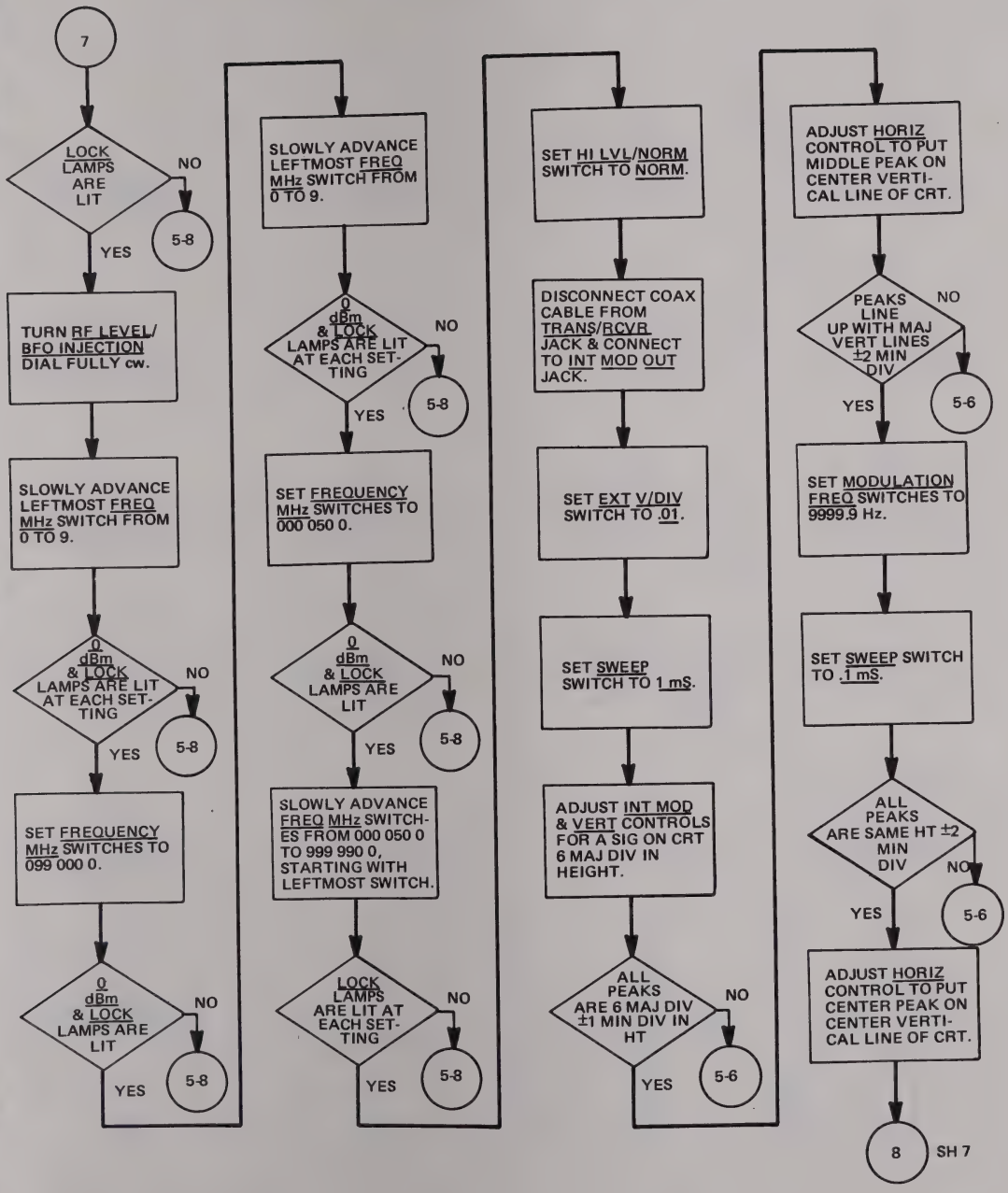
7
LOCK LAMPS ARE LIT
NO
YES
5-8
TURN RF LEVEL/ BFO INJECTION DIAL FULLY cw.
SLOWLY ADVANCE LEFTMOST FREQ MHz SWITCH FROM 0 TO 9.
0 dBm & LOCK LAMPS ARE LIT AT EACH SET-TING
NO
YES
5-8
SET FREQUENCY MHz SWITCHES TO 099 000 0.
0 dBm & LOCK LAMPS ARE LIT
NO
YES
5-8
SLOWLY ADVANCE LEFTMOST FREQ MHz SWITCH FROM 0 TO 9.
0 dBm & LOCK LAMPS ARE LIT AT EACH SET-TING
NO
YES
5-8
SET FREQUENCY MHz SWITCHES TO 000 050 0.
0 dBm & LOCK LAMPS ARE LIT
NO
YES
5-8
SLOWLY ADVANCE FREQ MHz SWITCH-ES FROM 000 050 0 TO 999 990 0, STARTING WITH LEFTMOST SWITCH.
LOCK LAMPS ARE LIT AT EACH SET-TING
NO
YES
5-8
SET HI LVL/NORM SWITCH TO NORM.
DISCONNECT COAX CABLE FROM TRANS/RCVR JACK & CONNECT TO INT MOD OUT JACK.
SET EXT V/DIV SWITCH TO .01.
SET SWEEP SWITCH TO 1 mS.
ADJUST INT MOD & VERT CONTROLS FOR A SIG ON CRT 6 MAJ DIV IN HEIGHT.
ALL PEAKS ARE 6 MAJ DIV ±1 MIN DIV IN HT
NO
YES
5-6
ADJUST HORIZ CONTROL TO PUT MIDDLE PEAK ON CENTER VERTI-CAL LINE OF CRT.
PEAKS LINE UP WITH MAJ VERT LINES ±2 MIN DIV
NO
YES
5-6
SET MODULATION FREQ SWITCHES TO 9999.9 Hz.
SET SWEEP SWITCH TO .1 mS.
ALL PEAKS ARE SAME HT ±2 MIN DIV
NO
YES
5-6
ADJUST HORIZ CONTROL TO PUT CENTER PEAK ON CENTER VERTI-CAL LINE OF CRT.
8
SH 7

Figure 5-2. AN/GRM-114 performance test (sheet 6 of 13).

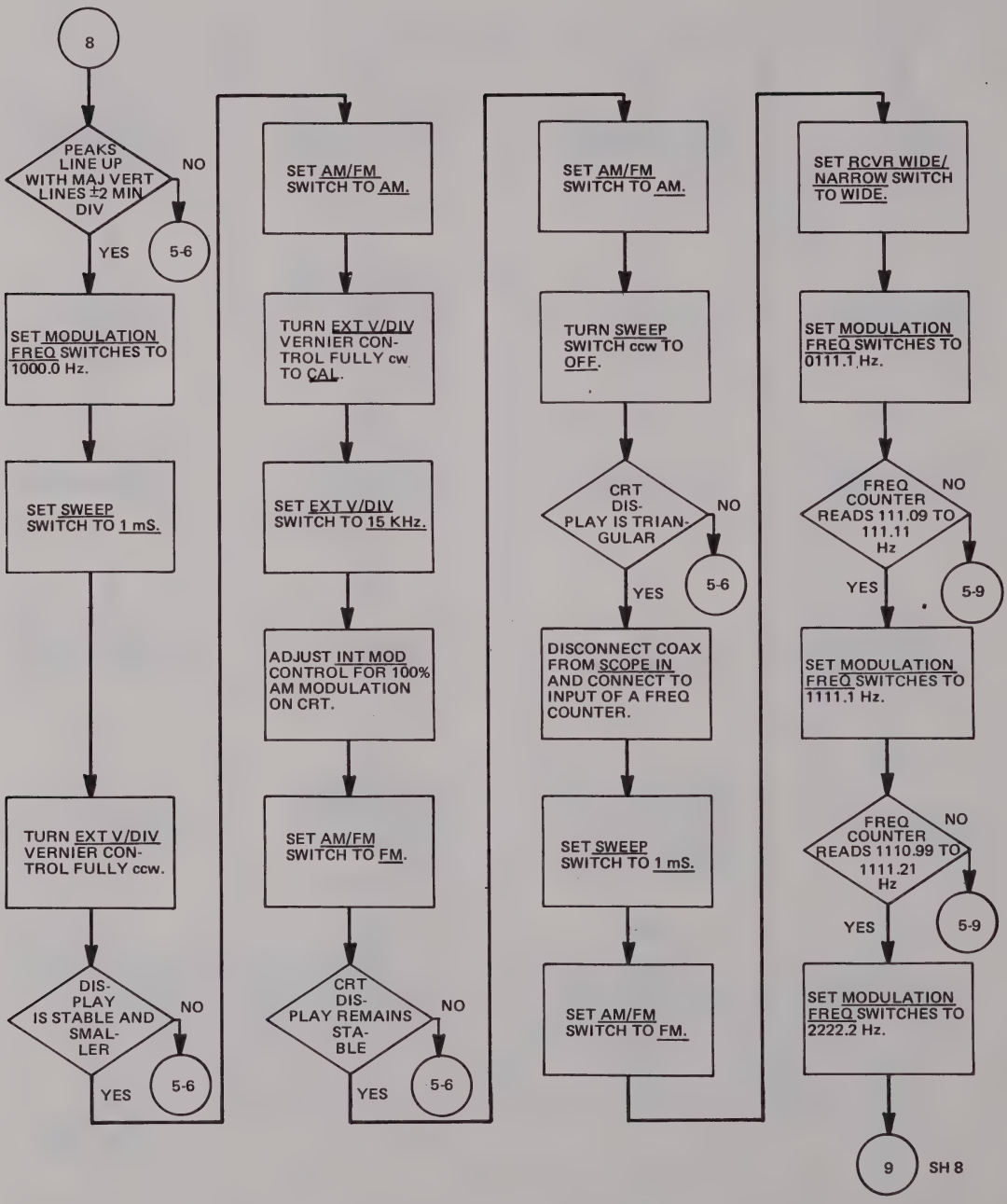
8
PEAKS LINE UP WITH MAJ VERT LINES ±2 MIN DIV
NO
YES
5-6
SET MODULATION FREQ SWITCHES TO 1000.0 Hz.
SET SWEEP SWITCH TO 1 mS.
TURN EXT V/DIV VERNIER CONTROL FULLY ccw.
DISPLAY IS STABLE AND SMALLER
NO
YES
5-6
SET AM/FM SWITCH TO AM.
TURN EXT V/DIV VERNIER CONTROL FULLY cw TO CAL.
SET EXT V/DIV SWITCH TO 15 KHz.
ADJUST INT MOD CONTROL FOR 100% AM MODULATION ON CRT.
SET AM/FM SWITCH TO FM.
CRT DISPLAY REMAINS STABLE
NO
YES
5-6
SET AM/FM SWITCH TO AM.
TURN SWEEP SWITCH ccw TO OFF.
CRT DISPLAY IS TRIANGULAR
NO
YES
5-6
DISCONNECT COAX FROM SCOPE IN AND CONNECT TO INPUT OF A FREQ COUNTER.
SET SWEEP SWITCH TO 1 mS.
SET AM/FM SWITCH TO FM.
SET RCVR WIDE/NARROW SWITCH TO WIDE.
SET MODULATION FREQ SWITCHES TO 0111.1 Hz.
FREQ COUNTER READS 111.09 TO 111.11 Hz
NO
YES
5-9
SET MODULATION FREQ SWITCHES TO 1111.1 Hz.
FREQ COUNTER READS 1110.99 TO 1111.21 Hz
NO
YES
5-9
SET MODULATION FREQ SWITCHES TO 2222.2 Hz.
9
SH 8

Figure 5-2. AN/GRM-114 performance test (sheet 7 of 13).

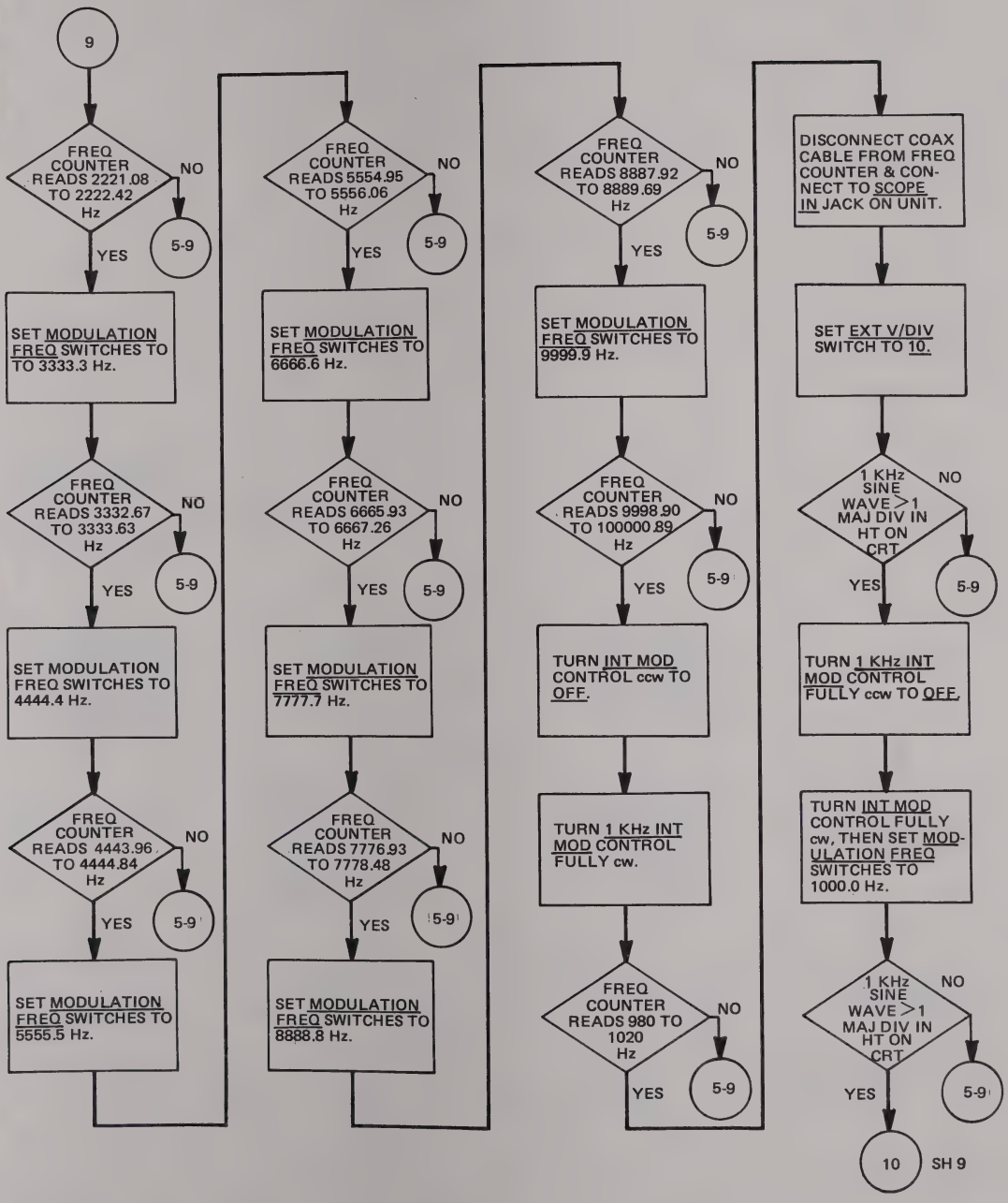

Figure 5-2. AN/GRM-114 performance test (sheet 8 of 13).

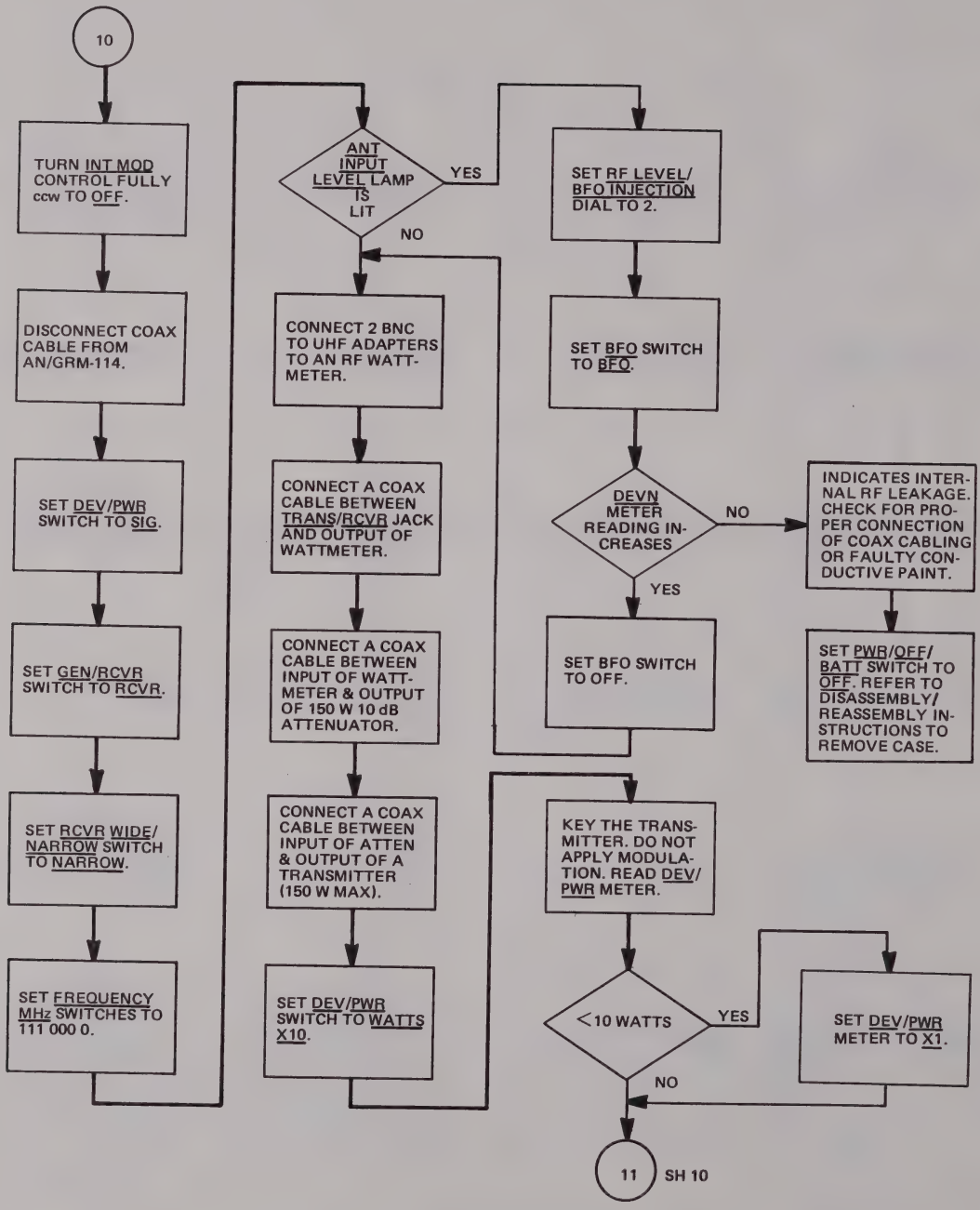
10
TURN INT MOD CONTROL FULLY ccw TO OFF.
DISCONNECT COAX CABLE FROM AN/GRM-114.
SET DEV/PWR SWITCH TO SIG.
SET GEN/RCVR SWITCH TO RCVR.
SET RCVR WIDE/ NARROW SWITCH TO NARROW.
SET FREQUENCY MHz SWITCHES TO 111 000 0.
ANT INPUT LEVEL LAMP IS LIT
YES
NO
CONNECT 2 BNC TO UHF ADAPTERS TO AN RF WATT-METER.
CONNECT A COAX CABLE BETWEEN TRANS/RCVR JACK AND OUTPUT OF WATTMETER.
CONNECT A COAX CABLE BETWEEN INPUT OF WATT-METER & OUTPUT OF 150 W 10 dB ATTENUATOR.
CONNECT A COAX CABLE BETWEEN INPUT OF ATTEN & OUTPUT OF A TRANSMITTER (150 W MAX).
SET DEV/PWR SWITCH TO WATTS X10.
SET RF LEVEL/ BFO INJECTION DIAL TO 2.
SET BFO SWITCH TO BFO.
DEVN METER READING IN-CREASES
NO
YES
INDICATES INTER-NAL RF LEAKAGE. CHECK FOR PRO-PER CONNECTION OF COAX CABLING OR FAULTY CON-DUCTIVE PAINT.
SET PWR/OFF/ BATT SWITCH TO OFF. REFER TO DISASSEMBLY/ REASSEMBLY IN-STRUCTIONS TO REMOVE CASE.
SET BFO SWITCH TO OFF.
KEY THE TRANS-MITTER. DO NOT APPLY MODULA-TION. READ DEV/ PWR METER.
< 10 WATTS
YES
NO
SET DEV/PWR METER TO X1.
11
SH 10

Figure 5-2. AN/GRM-114 performance test (sheet 9 of 13).

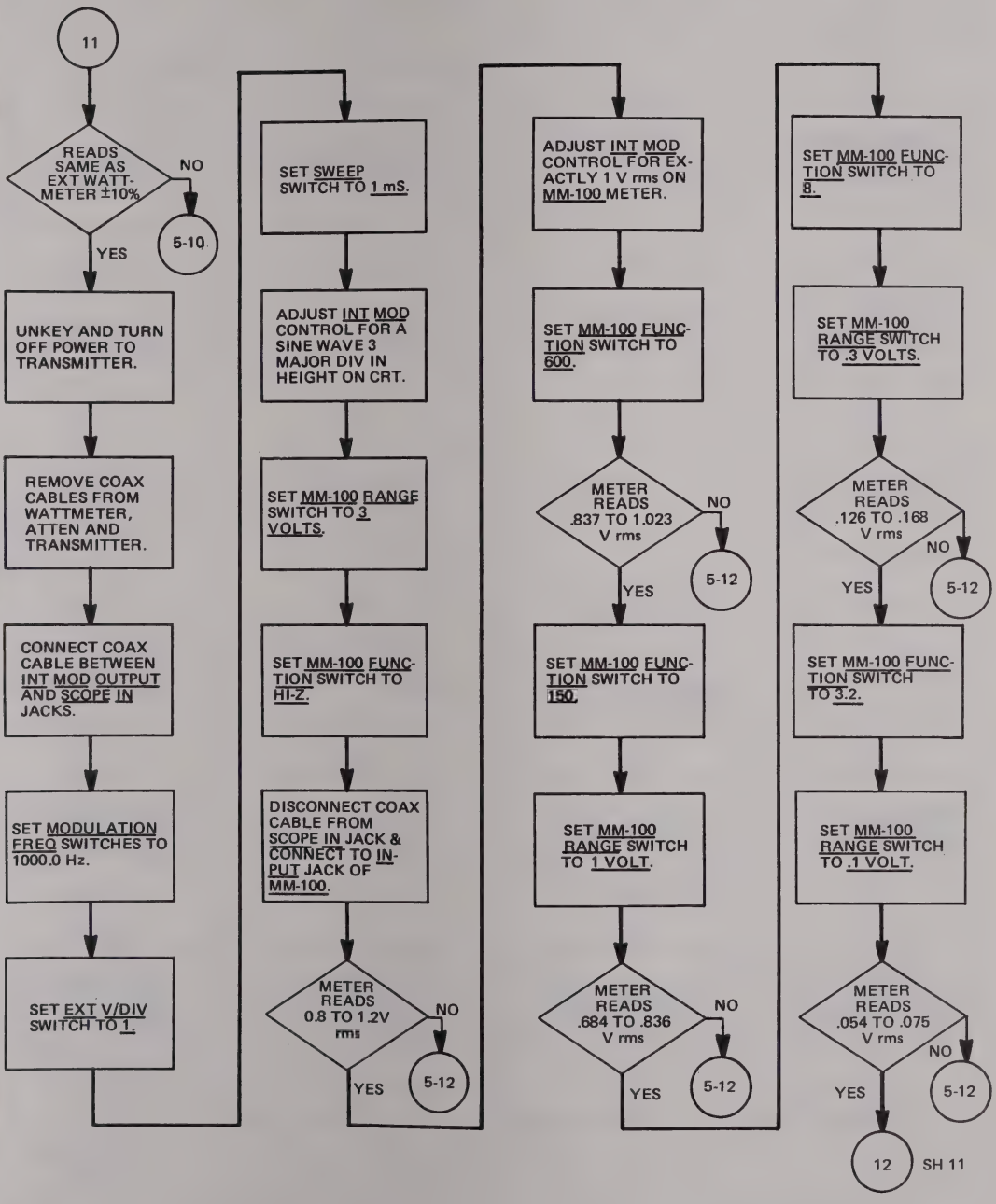
11
READS SAME AS EXT WATT-METER ±10%
NO
5-10
YES
UNKEY AND TURN OFF POWER TO TRANSMITTER.
REMOVE COAX CABLES FROM WATTMETER, ATTEN AND TRANSMITTER.
CONNECT COAX CABLE BETWEEN INT MOD OUTPUT AND SCOPE IN JACKS.
SET MODULATION FREQ SWITCHES TO 1000.0 Hz.
SET EXT V/DIV SWITCH TO 1.
SET SWEEP SWITCH TO 1 mS.
ADJUST INT MOD CONTROL FOR A SINE WAVE 3 MAJOR DIV IN HEIGHT ON CRT.
SET MM-100 RANGE SWITCH TO 3 VOLTS.
SET MM-100 FUNCTION SWITCH TO HI-Z.
DISCONNECT COAX CABLE FROM SCOPE IN JACK & CONNECT TO INPUT JACK OF MM-100.
METER READS 0.8 TO 1.2V rms
NO
5-12
YES
ADJUST INT MOD CONTROL FOR EXACTLY 1 V rms ON MM-100 METER.
SET MM-100 FUNCTION SWITCH TO 600.
METER READS .837 TO 1.023 V rms
NO
5-12
YES
SET MM-100 FUNCTION SWITCH TO 150.
SET MM-100 RANGE SWITCH TO 1 VOLT.
METER READS .684 TO .836 V rms
NO
5-12
YES
SET MM-100 FUNCTION SWITCH TO 8.
SET MM-100 RANGE SWITCH TO .3 VOLTS.
METER READS .126 TO .168 V rms
NO
5-12
YES
SET MM-100 FUNCTION SWITCH TO 3.2.
SET MM-100 RANGE SWITCH TO .1 VOLT.
METER READS .054 TO .075 V rms
NO
5-12
YES
12
SH 11

Figure 5-2. AN/GRM-114 performance test (sheet 10 of 13).

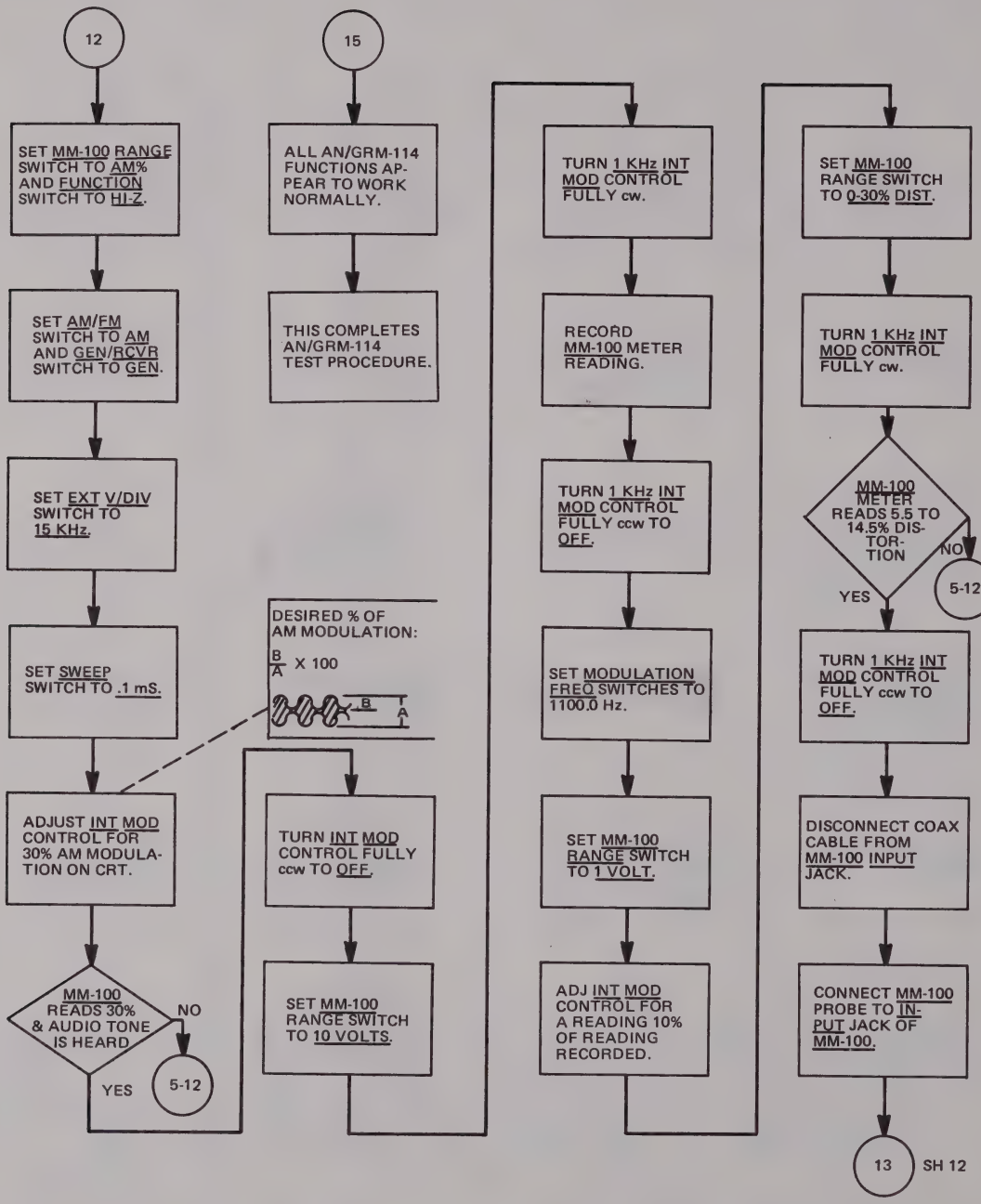
12
SET MM-100 RANGE SWITCH TO AM% AND FUNCTION SWITCH TO HI-Z.
SET AM/FM SWITCH TO AM AND GEN/RCVR SWITCH TO GEN.
SET EXT V/DIV SWITCH TO 15 KHz.
SET SWEEP SWITCH TO .1 mS.
ADJUST INT MOD CONTROL FOR 30% AM MODULATION ON CRT.
MM-100 READS 30% & AUDIO TONE IS HEARD
NO
YES
5-12
DESIRED % OF AM MODULATION:
B/A X 100
B
A
TURN INT MOD CONTROL FULLY ccw TO OFF.
SET MM-100 RANGE SWITCH TO 10 VOLTS.
15
ALL AN/GRM-114 FUNCTIONS APPEAR TO WORK NORMALLY.
THIS COMPLETES AN/GRM-114 TEST PROCEDURE.
TURN 1 KHz INT MOD CONTROL FULLY cw.
RECORD MM-100 METER READING.
TURN 1 KHz INT MOD CONTROL FULLY ccw TO OFF.
SET MODULATION FREQ SWITCHES TO 1100.0 Hz.
SET MM-100 RANGE SWITCH TO 1 VOLT.
ADJ INT MOD CONTROL FOR A READING 10% OF READING RECORDED.
SET MM-100 RANGE SWITCH TO 0-30% DIST.
TURN 1 KHz INT MOD CONTROL FULLY cw.
MM-100 METER READS 5.5 TO 14.5% DISTORTION
NO
YES
5-12
TURN 1 KHz INT MOD CONTROL FULLY ccw TO OFF.
DISCONNECT COAX CABLE FROM MM-100 INPUT JACK.
CONNECT MM-100 PROBE TO INPUT JACK OF MM-100.
13
SH 12

Figure 5-2. AN/GRM-114 performance test (sheet 11 of 13)

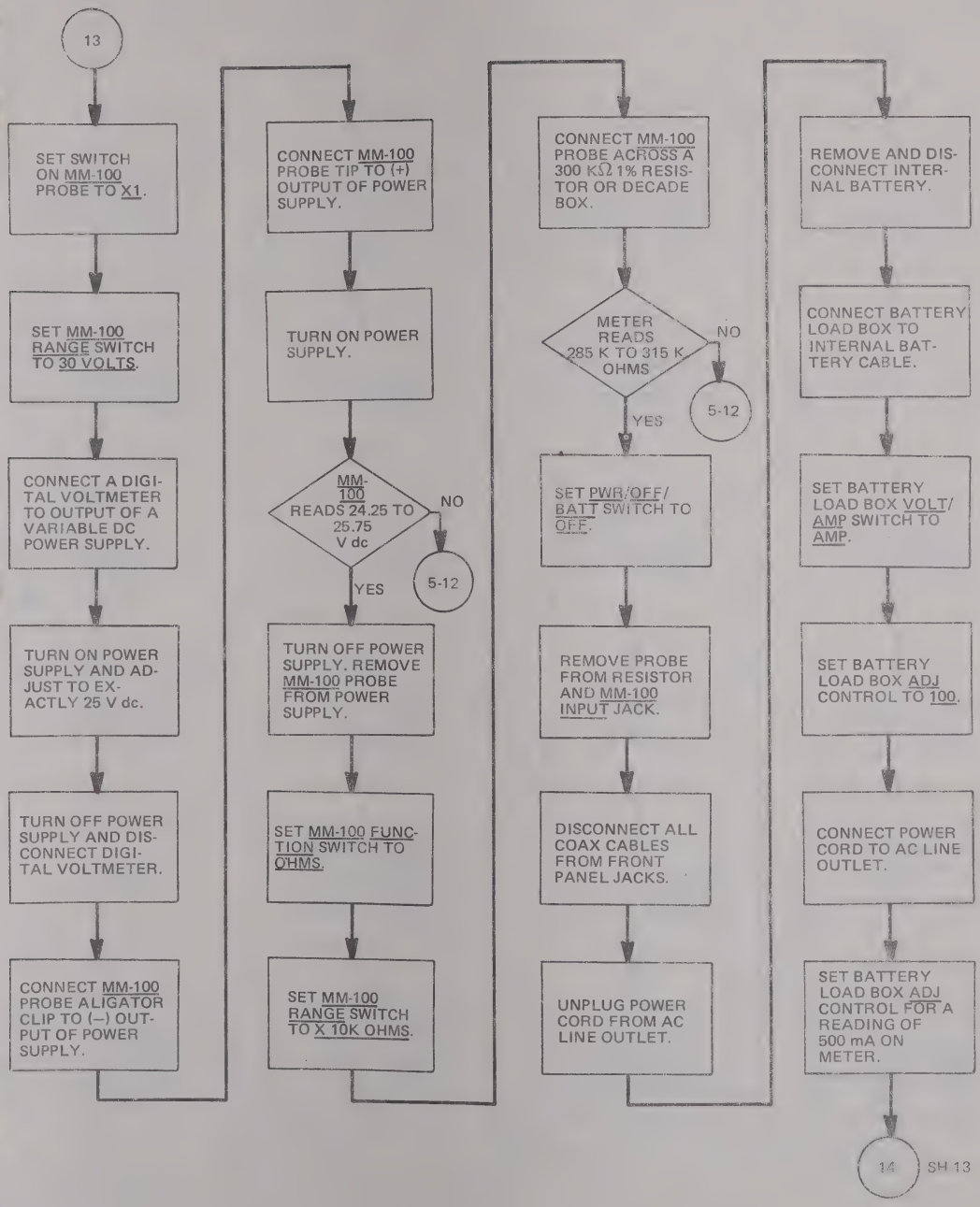
13
SET SWITCH ON MM-100 PROBE TO X1.
SET MM-100 RANGE SWITCH TO 30 VOLTS.
CONNECT A DIGITAL VOLTMETER TO OUTPUT OF A VARIABLE DC POWER SUPPLY.
TURN ON POWER SUPPLY AND ADJUST TO EXACTLY 25 V dc.
TURN OFF POWER SUPPLY AND DISCONNECT DIGITAL VOLTMETER.
CONNECT MM-100 PROBE ALIGATOR CLIP TO (–) OUTPUT OF POWER SUPPLY.
CONNECT MM-100 PROBE TIP TO (+) OUTPUT OF POWER SUPPLY.
TURN ON POWER SUPPLY.
MM-100 READS 24.25 TO 25.75 V dc
NO
YES
5-12
TURN OFF POWER SUPPLY. REMOVE MM-100 PROBE FROM POWER SUPPLY.
SET MM-100 FUNCTION SWITCH TO OHMS.
SET MM-100 RANGE SWITCH TO X 10K OHMS.
CONNECT MM-100 PROBE ACROSS A 300 KΩ 1% RESISTOR OR DECADE BOX.
METER READS 285 K TO 315 K OHMS
NO
YES
5-12
SET PWR/OFF/BATT SWITCH TO OFF.
REMOVE PROBE FROM RESISTOR AND MM-100 INPUT JACK.
DISCONNECT ALL COAX CABLES FROM FRONT PANEL JACKS.
UNPLUG POWER CORD FROM AC LINE OUTLET.
REMOVE AND DISCONNECT INTERNAL BATTERY.
CONNECT BATTERY LOAD BOX TO INTERNAL BATTERY CABLE.
SET BATTERY LOAD BOX VOLT/AMP SWITCH TO AMP.
SET BATTERY LOAD BOX ADJ CONTROL TO 100.
CONNECT POWER CORD TO AC LINE OUTLET.
SET BATTERY LOAD BOX ADJ CONTROL FOR A READING OF 500 mA ON METER.
14
SH 13

Figure 5-2. AN/GRM-114 performance test (sheet 12 of 13).

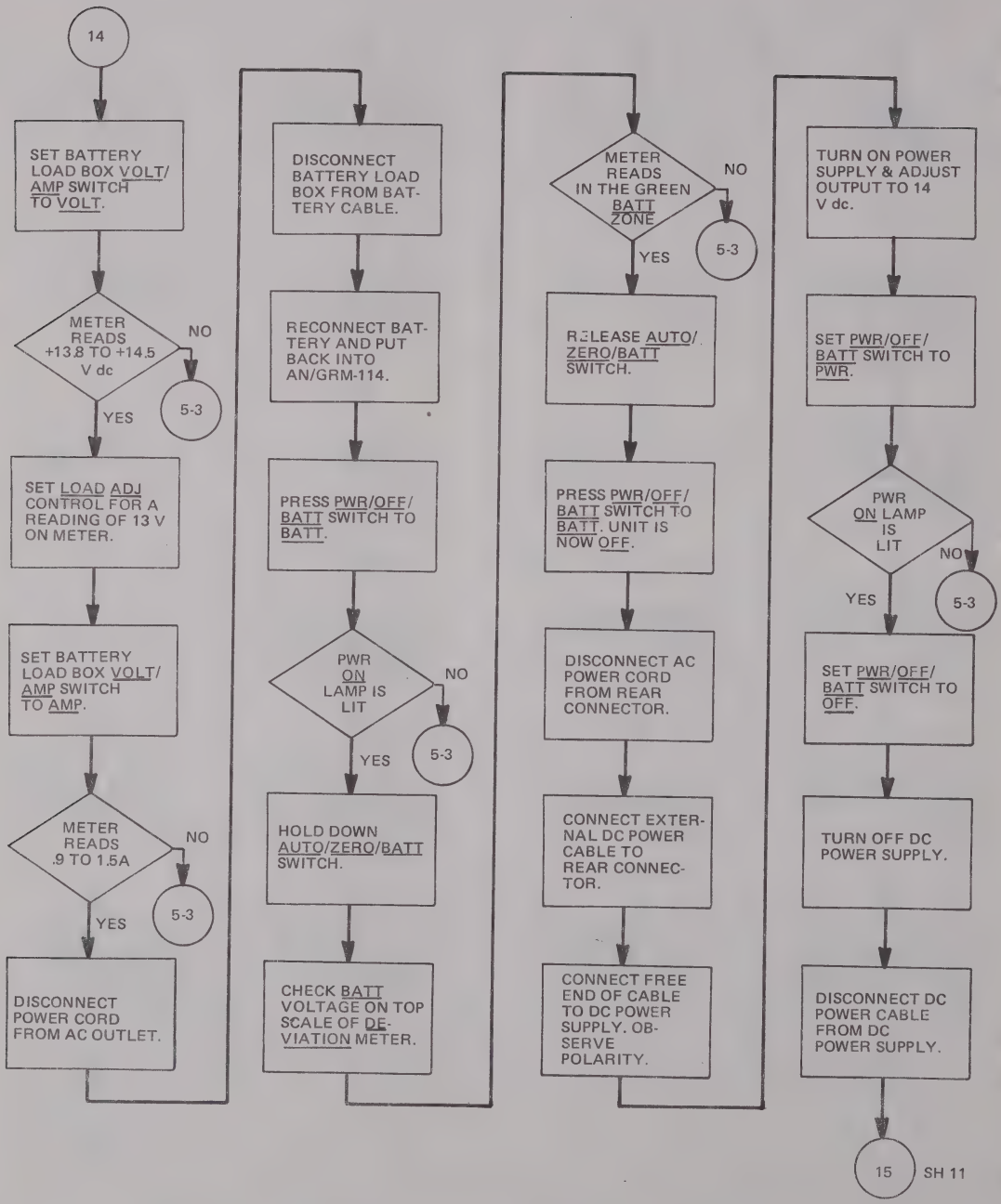
14
SET BATTERY LOAD BOX VOLT/ AMP SWITCH TO VOLT.
METER READS +13.8 TO +14.5 V dc
NO
5-3
YES
SET LOAD ADJ CONTROL FOR A READING OF 13 V ON METER.
SET BATTERY LOAD BOX VOLT/ AMP SWITCH TO AMP.
METER READS .9 TO 1.5A
NO
5-3
YES
DISCONNECT POWER CORD FROM AC OUTLET.
DISCONNECT BATTERY LOAD BOX FROM BATTERY CABLE.
RECONNECT BATTERY AND PUT BACK INTO AN/GRM-114.
PRESS PWR/OFF/ BATT SWITCH TO BATT.
PWR ON LAMP IS LIT
NO
5-3
YES
HOLD DOWN AUTO/ZERO/BATT SWITCH.
CHECK BATT VOLTAGE ON TOP SCALE OF DEVIATION METER.
METER READS IN THE GREEN BATT ZONE
NO
5-3
YES
RELEASE AUTO/ ZERO/BATT SWITCH.
PRESS PWR/OFF/ BATT SWITCH TO BATT. UNIT IS NOW OFF.
DISCONNECT AC POWER CORD FROM REAR CONNECTOR.
CONNECT EXTERNAL DC POWER CABLE TO REAR CONNECTOR.
CONNECT FREE END OF CABLE TO DC POWER SUPPLY. OBSERVE POLARITY.
TURN ON POWER SUPPLY & ADJUST OUTPUT TO 14 V dc.
SET PWR/OFF/ BATT SWITCH TO PWR.
PWR ON LAMP IS LIT
NO
5-3
YES
SET PWR/OFF/ BATT SWITCH TO OFF.
TURN OFF DC POWER SUPPLY.
DISCONNECT DC POWER CABLE FROM DC POWER SUPPLY.
15
SH 11

Figure 5-2. AN/GRM-114 performance test (sheet 13 of 13).

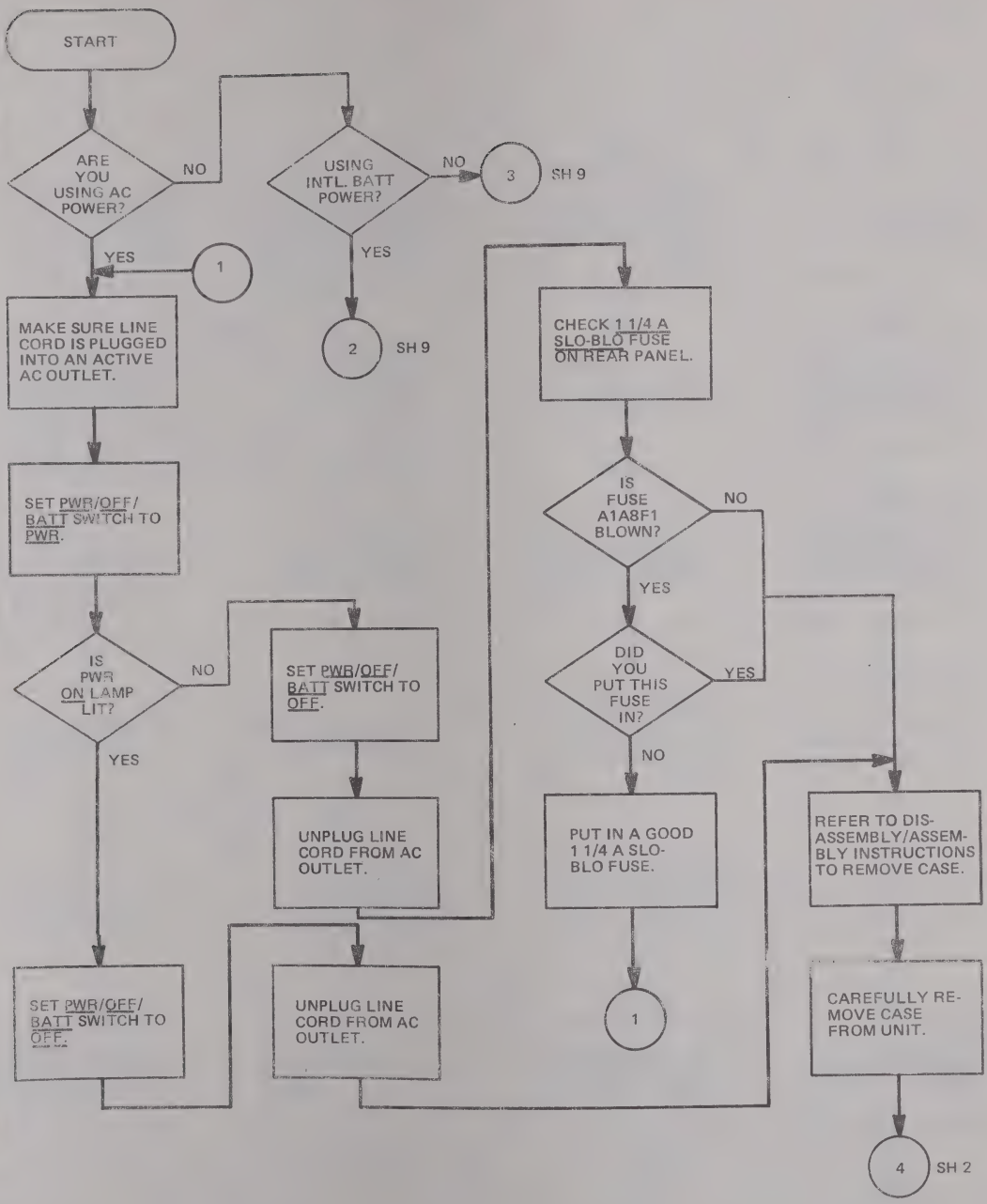

Figure 5-3. Power supply troubleshooting (sheet 1 of 16).

T

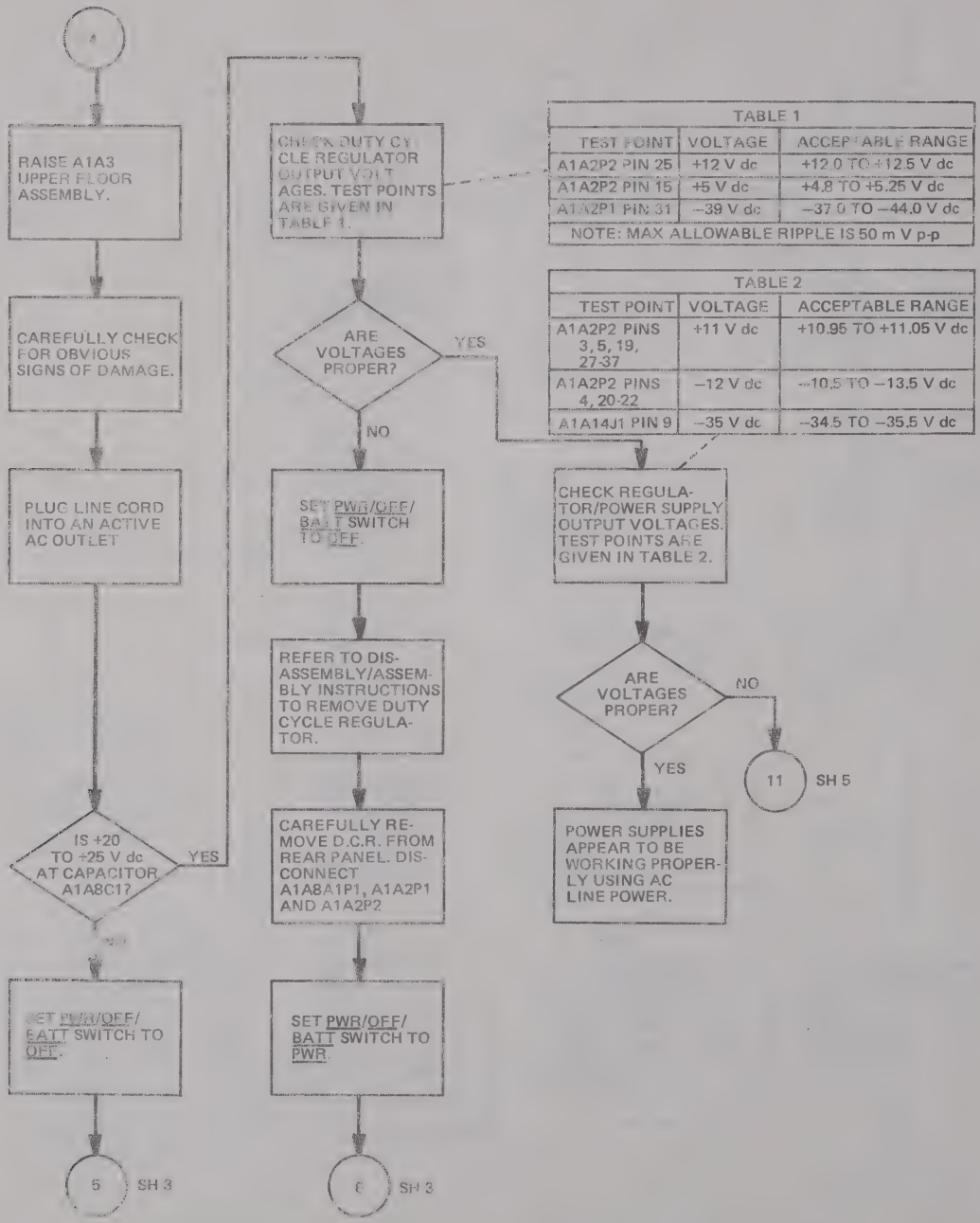
RAISE A1A3 UPPER FLOOR ASSEMBLY.
CAREFULLY CHECK FOR OBVIOUS SIGNS OF DAMAGE.
PLUG LINE CORD INTO AN ACTIVE AC OUTLET
IS +20 TO +25 V dc AT CAPACITOR A1A8C1?
YES
SET PWR/OFF/BATT SWITCH TO OFF.
5
SH 3
CHECK DUTY CYCLE REGULATOR OUTPUT VOLTAGES. TEST POINTS ARE GIVEN IN TABLE 1.
ARE VOLTAGES PROPER?
YES
NO
SET PWR/OFF/BATT SWITCH TO OFF.
REFER TO DISASSEMBLY/ASSEMBLY INSTRUCTIONS TO REMOVE DUTY CYCLE REGULATOR.
CAREFULLY REMOVE D.C.R. FROM REAR PANEL. DISCONNECT A1A8A1P1, A1A2P1 AND A1A2P2
SET PWR/OFF/BATT SWITCH TO PWR.
6
SH 3
CHECK REGULATOR/POWER SUPPLY OUTPUT VOLTAGES. TEST POINTS ARE GIVEN IN TABLE 2.
ARE VOLTAGES PROPER?
NO
YES
11
SH 5
POWER SUPPLIES APPEAR TO BE WORKING PROPERLY USING AC LINE POWER.
TABLE 1
TEST POINT | VOLTAGE | ACCEPTABLE RANGE
A1A2P2 PIN 25 | +12 V dc | +12.0 TO +12.5 V dc
A1A2P2 PIN 15 | +5 V dc | +4.8 TO +5.25 V dc
A1A2P1 PIN 31 | −39 V dc | −37.0 TO −44.0 V dc
NOTE: MAX ALLOWABLE RIPPLE IS 50 m V p-p
TABLE 2
TEST POINT | VOLTAGE | ACCEPTABLE RANGE
A1A2P2 PINS 3, 5, 19, 27-37 | +11 V dc | +10.95 TO +11.05 V dc
A1A2P2 PINS 4, 20-22 | −12 V dc | −10.5 TO −13.5 V dc
A1A14J1 PIN 9 | −35 V dc | −34.5 TO −35.5 V dc

Figure 5-3. Power supply troubleshooting (sheet 2 of 16).

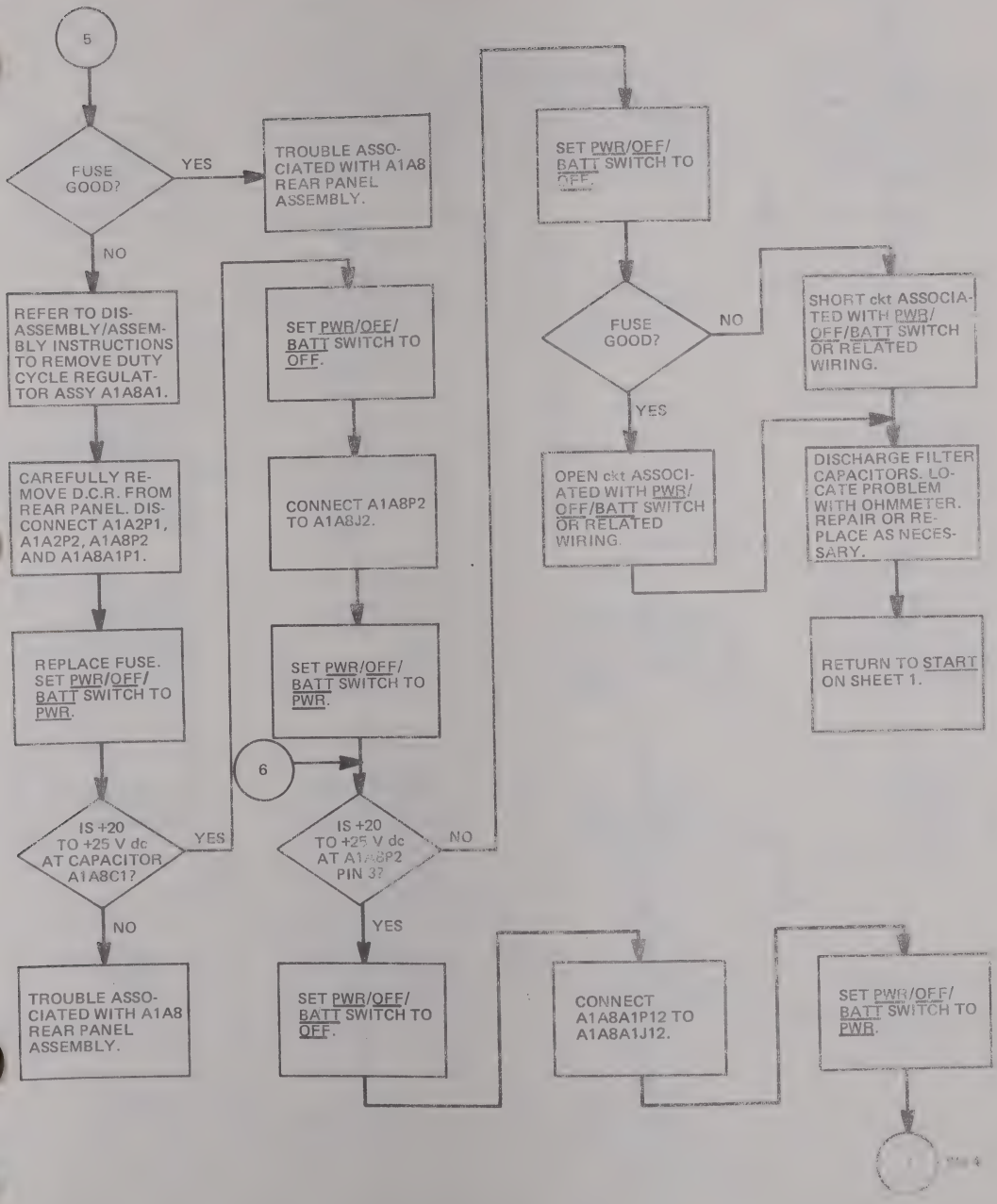
5
FUSE GOOD?
YES
TROUBLE ASSOCIATED WITH A1A8 REAR PANEL ASSEMBLY.
NO
REFER TO DISASSEMBLY/ASSEMBLY INSTRUCTIONS TO REMOVE DUTY CYCLE REGULATOR ASSY A1A8A1.
CAREFULLY REMOVE D.C.R. FROM REAR PANEL. DISCONNECT A1A2P1, A1A2P2, A1A8P2 AND A1A8A1P1.
REPLACE FUSE. SET PWR/OFF/BATT SWITCH TO PWR.
IS +20 TO +25 V dc AT CAPACITOR A1A8C1?
YES
NO
TROUBLE ASSOCIATED WITH A1A8 REAR PANEL ASSEMBLY.
SET PWR/OFF/BATT SWITCH TO OFF.
CONNECT A1A8P2 TO A1A8J2.
SET PWR/OFF/BATT SWITCH TO PWR.
6
IS +20 TO +25 V dc AT A1A8P2 PIN 3?
NO
YES
SET PWR/OFF/BATT SWITCH TO OFF.
SET PWR/OFF/BATT SWITCH TO OFF.
FUSE GOOD?
NO
YES
OPEN ckt ASSOCIATED WITH PWR/OFF/BATT SWITCH OR RELATED WIRING.
SHORT ckt ASSOCIATED WITH PWR/OFF/BATT SWITCH OR RELATED WIRING.
DISCHARGE FILTER CAPACITORS. LOCATE PROBLEM WITH OHMMETER. REPAIR OR REPLACE AS NECESSARY.
RETURN TO START ON SHEET 1.
CONNECT A1A8A1P12 TO A1A8A1J12.
SET PWR/OFF/BATT SWITCH TO PWR.

Figure 5-3. Power supply troubleshooting (sheet 3 of 4)

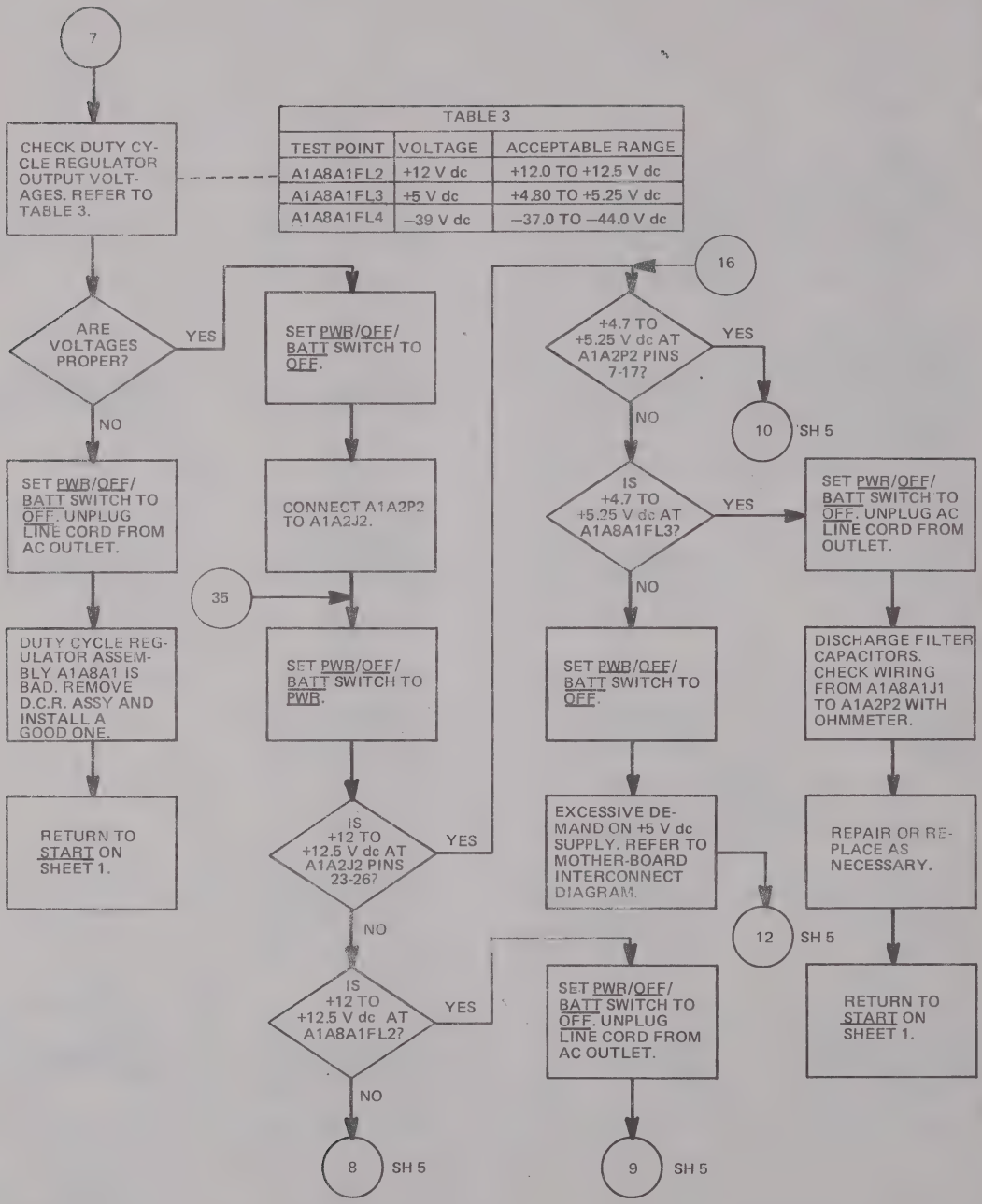
7
CHECK DUTY CYCLE REGULATOR OUTPUT VOLTAGES. REFER TO TABLE 3.
TABLE 3
TEST POINT | VOLTAGE | ACCEPTABLE RANGE
A1A8A1FL2 | +12 V dc | +12.0 TO +12.5 V dc
A1A8A1FL3 | +5 V dc | +4.80 TO +5.25 V dc
A1A8A1FL4 | −39 V dc | −37.0 TO −44.0 V dc
ARE VOLTAGES PROPER?
YES
NO
SET PWR/OFF/BATT SWITCH TO OFF. UNPLUG LINE CORD FROM AC OUTLET.
DUTY CYCLE REGULATOR ASSEMBLY A1A8A1 IS BAD. REMOVE D.C.R. ASSY AND INSTALL A GOOD ONE.
RETURN TO START ON SHEET 1.
SET PWR/OFF/BATT SWITCH TO OFF.
CONNECT A1A2P2 TO A1A2J2.
35
SET PWR/OFF/BATT SWITCH TO PWR.
IS +12 TO +12.5 V dc AT A1A2J2 PINS 23-26?
YES
NO
IS +12 TO +12.5 V dc AT A1A8A1FL2?
YES
NO
8 SH 5
16
+4.7 TO +5.25 V dc AT A1A2P2 PINS 7-17?
YES
NO
10 SH 5
IS +4.7 TO +5.25 V dc AT A1A8A1FL3?
YES
NO
SET PWR/OFF/BATT SWITCH TO OFF.
EXCESSIVE DEMAND ON +5 V dc SUPPLY. REFER TO MOTHER-BOARD INTERCONNECT DIAGRAM.
12 SH 5
SET PWR/OFF/BATT SWITCH TO OFF. UNPLUG LINE CORD FROM AC OUTLET.
9 SH 5
SET PWR/OFF/BATT SWITCH TO OFF. UNPLUG AC LINE CORD FROM OUTLET.
DISCHARGE FILTER CAPACITORS. CHECK WIRING FROM A1A8A1J1 TO A1A2P2 WITH OHMMETER.
REPAIR OR REPLACE AS NECESSARY.
RETURN TO START ON SHEET 1.

Figure 5-3. Power supply troubleshooting (sheet 4 of 16).

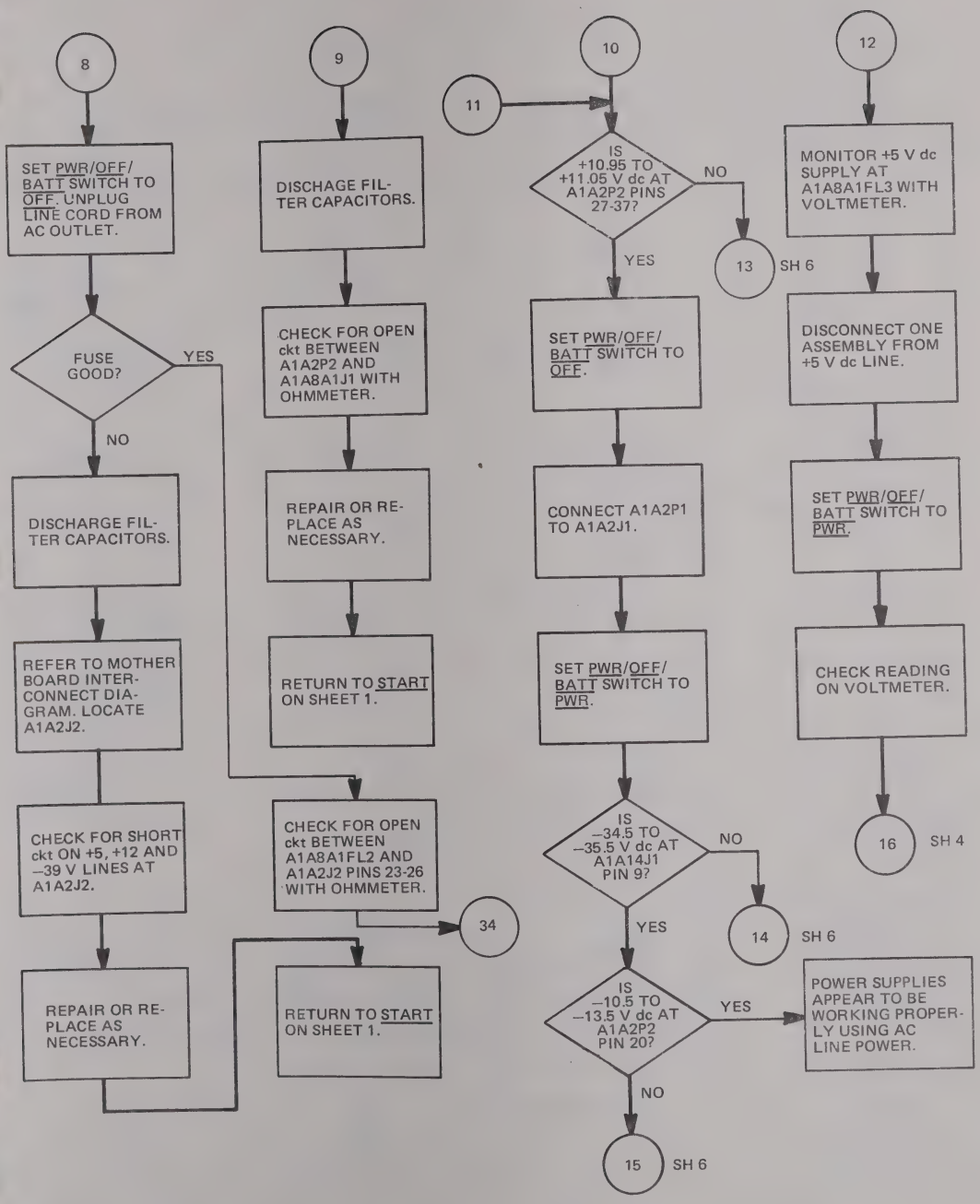
8
SET PWR/OFF/ BATT SWITCH TO OFF. UNPLUG LINE CORD FROM AC OUTLET.
FUSE GOOD?
YES
NO
DISCHARGE FIL- TER CAPACITORS.
REFER TO MOTHER BOARD INTER- CONNECT DIA- GRAM. LOCATE A1A2J2.
CHECK FOR SHORT ckt ON +5, +12 AND –39 V LINES AT A1A2J2.
REPAIR OR RE- PLACE AS NECESSARY.
9
DISCHAGE FIL- TER CAPACITORS.
CHECK FOR OPEN ckt BETWEEN A1A2P2 AND A1A8A1J1 WITH OHMMETER.
REPAIR OR RE- PLACE AS NECESSARY.
RETURN TO START ON SHEET 1.
CHECK FOR OPEN ckt BETWEEN A1A8A1FL2 AND A1A2J2 PINS 23-26 WITH OHMMETER.
34
RETURN TO START ON SHEET 1.
10
11
IS +10.95 TO +11.05 V dc AT A1A2P2 PINS 27-37?
NO
YES
13
SH 6
SET PWR/OFF/ BATT SWITCH TO OFF.
CONNECT A1A2P1 TO A1A2J1.
SET PWR/OFF/ BATT SWITCH TO PWR.
IS –34.5 TO –35.5 V dc AT A1A14J1 PIN 9?
NO
YES
14
SH 6
IS –10.5 TO –13.5 V dc AT A1A2P2 PIN 20?
YES
NO
15
SH 6
12
MONITOR +5 V dc SUPPLY AT A1A8A1FL3 WITH VOLTMETER.
DISCONNECT ONE ASSEMBLY FROM +5 V dc LINE.
SET PWR/OFF/ BATT SWITCH TO PWR.
CHECK READING ON VOLTMETER.
16
SH 4
POWER SUPPLIES APPEAR TO BE WORKING PROPER- LY USING AC LINE POWER.

Figure 5-3. Power supply troubleshooting (sheet 5 of 16).

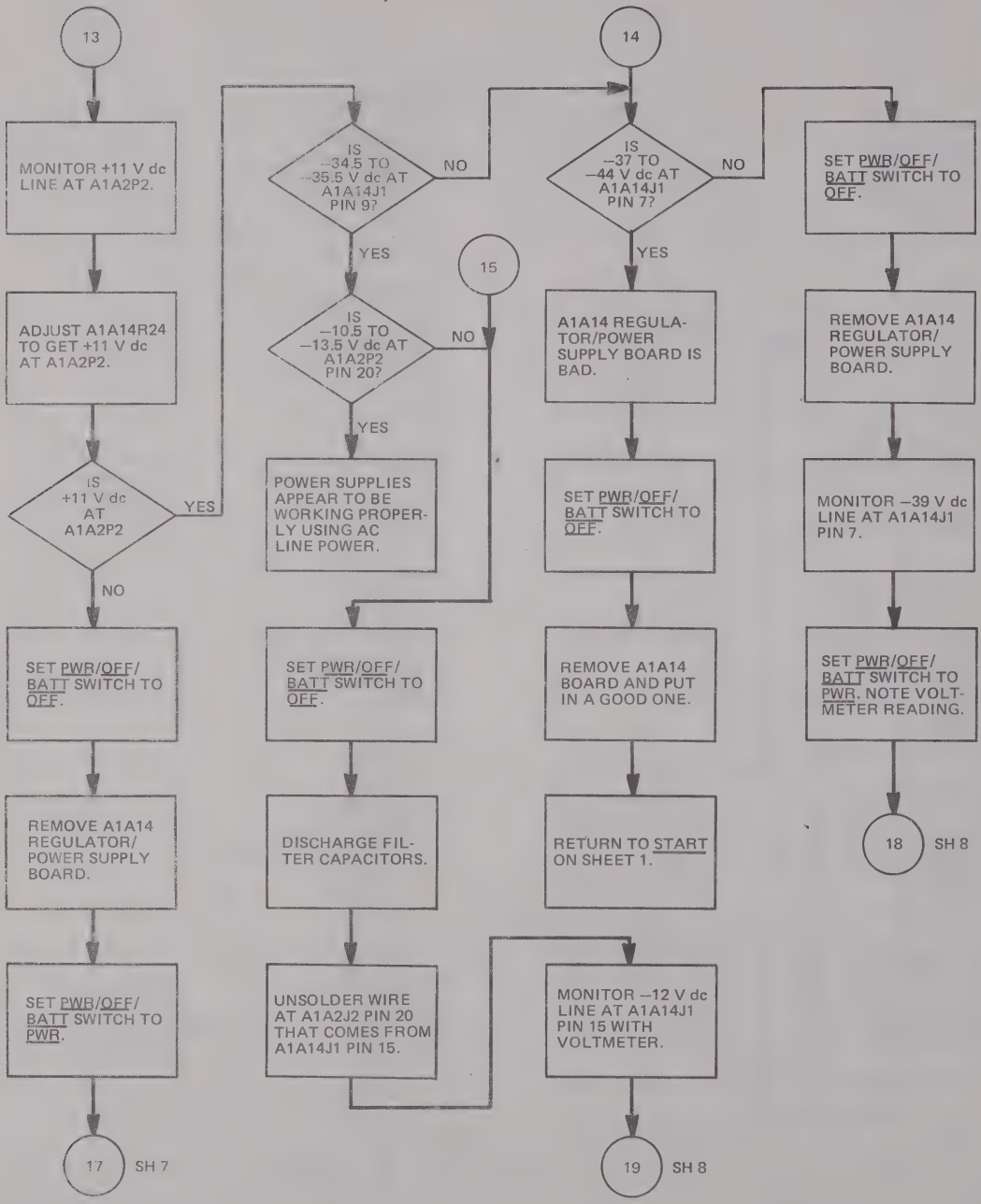
13
MONITOR +11 V dc LINE AT A1A2P2.
ADJUST A1A14R24 TO GET +11 V dc AT A1A2P2.
IS +11 V dc AT A1A2P2
YES
NO
SET PWR/OFF/ BATT SWITCH TO OFF.
REMOVE A1A14 REGULATOR/ POWER SUPPLY BOARD.
SET PWR/OFF/ BATT SWITCH TO PWR.
17
SH 7
IS −34.5 TO −35.5 V dc AT A1A14J1 PIN 9?
NO
YES
IS −10.5 TO −13.5 V dc AT A1A2P2 PIN 20?
NO
YES
15
POWER SUPPLIES APPEAR TO BE WORKING PROPERLY USING AC LINE POWER.
SET PWR/OFF/ BATT SWITCH TO OFF.
DISCHARGE FILTER CAPACITORS.
UNSOLDER WIRE AT A1A2J2 PIN 20 THAT COMES FROM A1A14J1 PIN 15.
14
IS −37 TO −44 V dc AT A1A14J1 PIN 7?
NO
YES
A1A14 REGULATOR/POWER SUPPLY BOARD IS BAD.
SET PWR/OFF/ BATT SWITCH TO OFF.
REMOVE A1A14 BOARD AND PUT IN A GOOD ONE.
RETURN TO START ON SHEET 1.
MONITOR −12 V dc LINE AT A1A14J1 PIN 15 WITH VOLTMETER.
19
SH 8
SET PWR/OFF/ BATT SWITCH TO OFF.
REMOVE A1A14 REGULATOR/ POWER SUPPLY BOARD.
MONITOR −39 V dc LINE AT A1A14J1 PIN 7.
SET PWR/OFF/ BATT SWITCH TO PWR. NOTE VOLTMETER READING.
18
SH 8

Figure 5-3. Power supply troubleshooting (sheet 6 of 16).

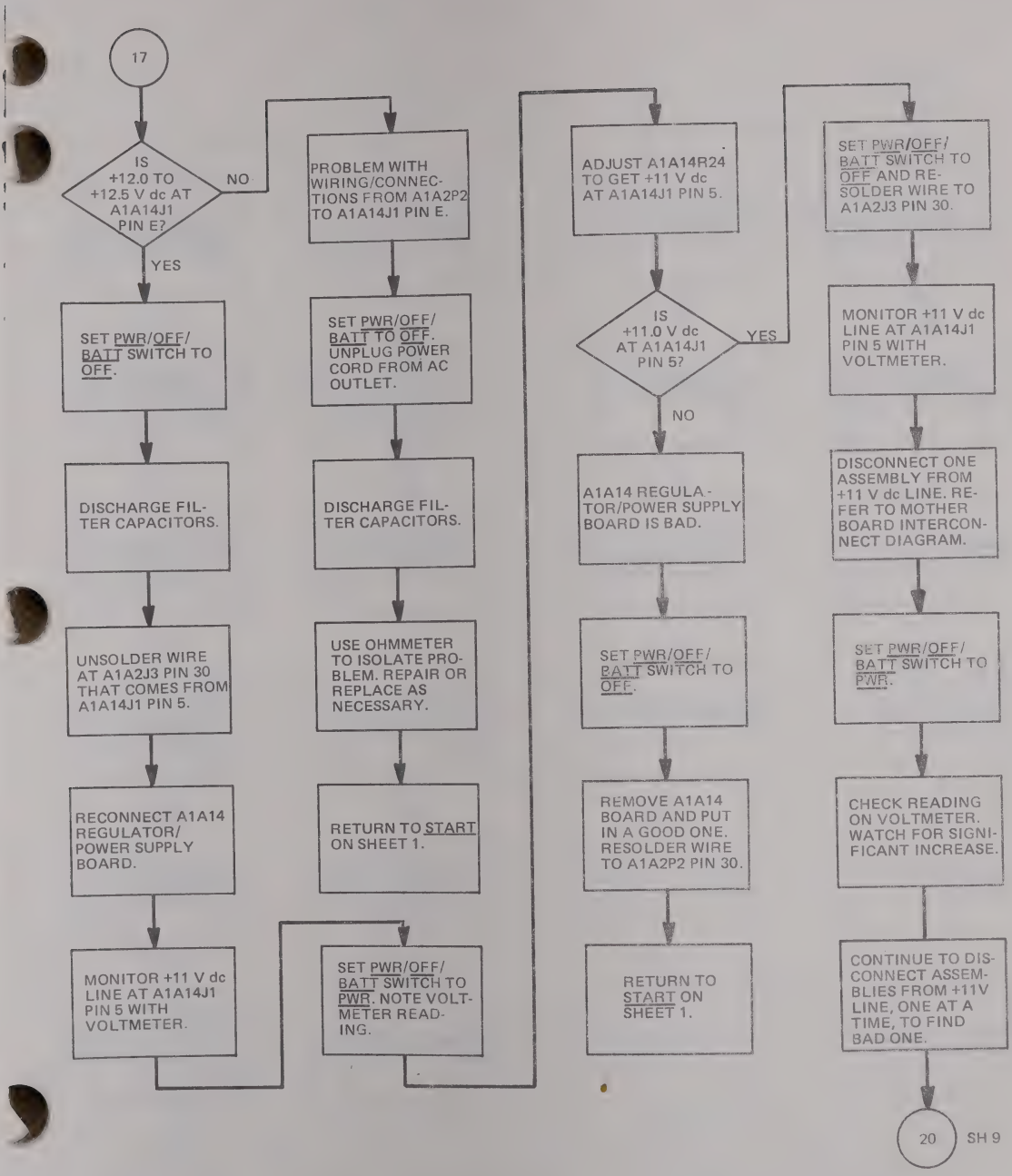
17
IS +12.0 TO +12.5 V dc AT A1A14J1 PIN E?
NO
YES
PROBLEM WITH WIRING/CONNECTIONS FROM A1A2P2 TO A1A14J1 PIN E.
SET PWR/OFF/BATT SWITCH TO OFF.
SET PWR/OFF/BATT TO OFF. UNPLUG POWER CORD FROM AC OUTLET.
DISCHARGE FILTER CAPACITORS.
DISCHARGE FILTER CAPACITORS.
UNSOLDER WIRE AT A1A2J3 PIN 30 THAT COMES FROM A1A14J1 PIN 5.
USE OHMMETER TO ISOLATE PROBLEM. REPAIR OR REPLACE AS NECESSARY.
RECONNECT A1A14 REGULATOR/POWER SUPPLY BOARD.
RETURN TO START ON SHEET 1.
MONITOR +11 V dc LINE AT A1A14J1 PIN 5 WITH VOLTMETER.
SET PWR/OFF/BATT SWITCH TO PWR. NOTE VOLTMETER READING.
ADJUST A1A14R24 TO GET +11 V dc AT A1A14J1 PIN 5.
IS +11.0 V dc AT A1A14J1 PIN 5?
YES
NO
A1A14 REGULATOR/POWER SUPPLY BOARD IS BAD.
SET PWR/OFF/BATT SWITCH TO OFF.
REMOVE A1A14 BOARD AND PUT IN A GOOD ONE. RESOLDER WIRE TO A1A2P2 PIN 30.
RETURN TO START ON SHEET 1.
SET PWR/OFF/BATT SWITCH TO OFF AND RESOLDER WIRE TO A1A2J3 PIN 30.
MONITOR +11 V dc LINE AT A1A14J1 PIN 5 WITH VOLTMETER.
DISCONNECT ONE ASSEMBLY FROM +11 V dc LINE. REFER TO MOTHER BOARD INTERCONNECT DIAGRAM.
SET PWR/OFF/BATT SWITCH TO PWR.
CHECK READING ON VOLTMETER. WATCH FOR SIGNIFICANT INCREASE.
CONTINUE TO DISCONNECT ASSEMBLIES FROM +11V LINE, ONE AT A TIME, TO FIND BAD ONE.
20
SH 9

Figure 5-3. Power supply troubleshooting (sheet 7 of 16).

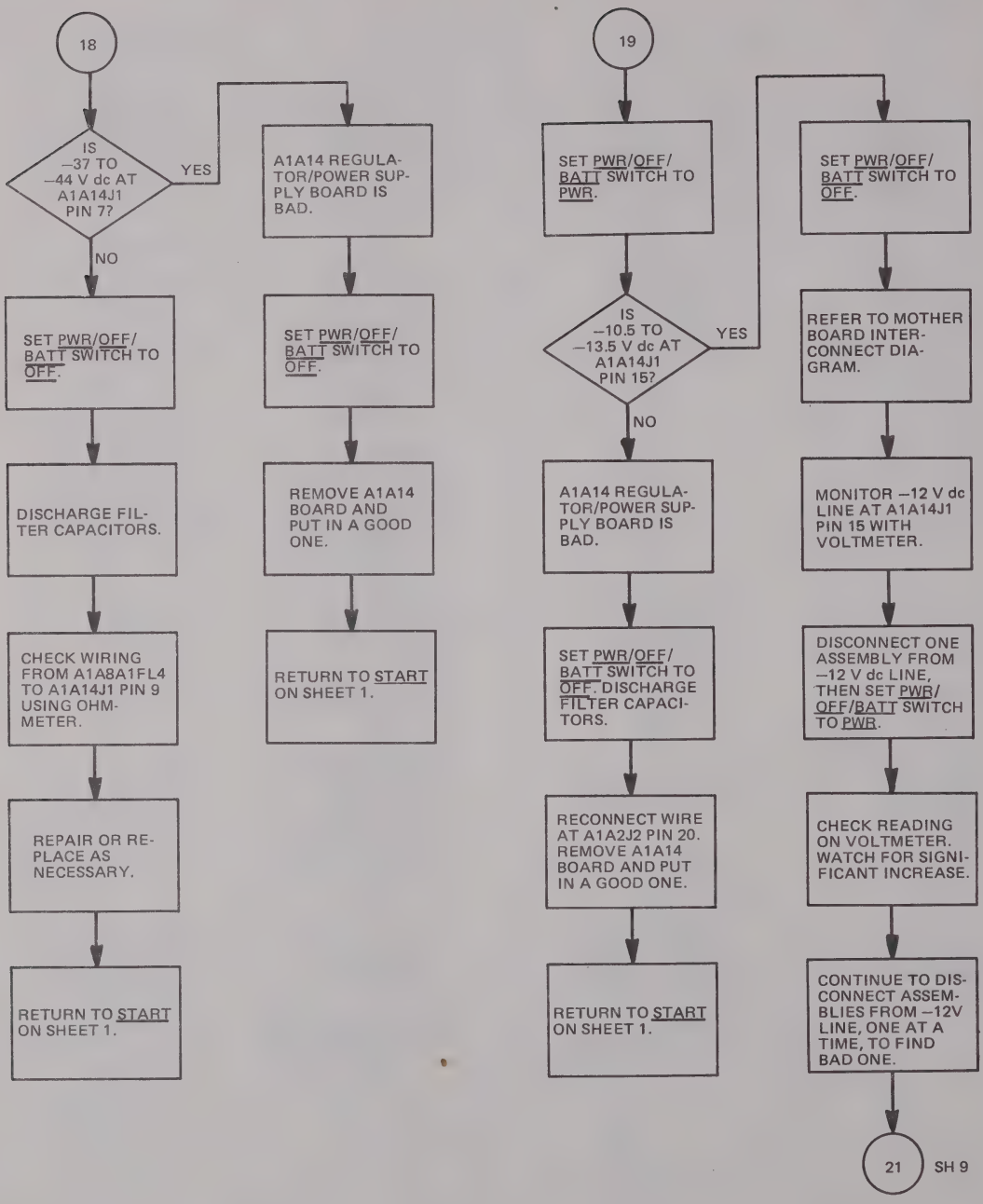
18
IS −37 TO −44 V dc AT A1A14J1 PIN 7?
YES
NO
A1A14 REGULATOR/POWER SUPPLY BOARD IS BAD.
SET PWR/OFF/BATT SWITCH TO OFF.
SET PWR/OFF/BATT SWITCH TO OFF.
DISCHARGE FILTER CAPACITORS.
REMOVE A1A14 BOARD AND PUT IN A GOOD ONE.
CHECK WIRING FROM A1A8A1FL4 TO A1A14J1 PIN 9 USING OHMMETER.
RETURN TO START ON SHEET 1.
REPAIR OR REPLACE AS NECESSARY.
RETURN TO START ON SHEET 1.
19
SET PWR/OFF/BATT SWITCH TO PWR.
SET PWR/OFF/BATT SWITCH TO OFF.
IS −10.5 TO −13.5 V dc AT A1A14J1 PIN 15?
YES
NO
REFER TO MOTHER BOARD INTERCONNECT DIAGRAM.
A1A14 REGULATOR/POWER SUPPLY BOARD IS BAD.
MONITOR −12 V dc LINE AT A1A14J1 PIN 15 WITH VOLTMETER.
SET PWR/OFF/BATT SWITCH TO OFF. DISCHARGE FILTER CAPACITORS.
DISCONNECT ONE ASSEMBLY FROM −12 V dc LINE, THEN SET PWR/OFF/BATT SWITCH TO PWR.
RECONNECT WIRE AT A1A2J2 PIN 20. REMOVE A1A14 BOARD AND PUT IN A GOOD ONE.
CHECK READING ON VOLTMETER. WATCH FOR SIGNIFICANT INCREASE.
RETURN TO START ON SHEET 1.
CONTINUE TO DISCONNECT ASSEMBLIES FROM −12V LINE, ONE AT A TIME, TO FIND BAD ONE.
21
SH 9

Figure 5-3. Power supply troubleshooting (sheet 8 of 16).

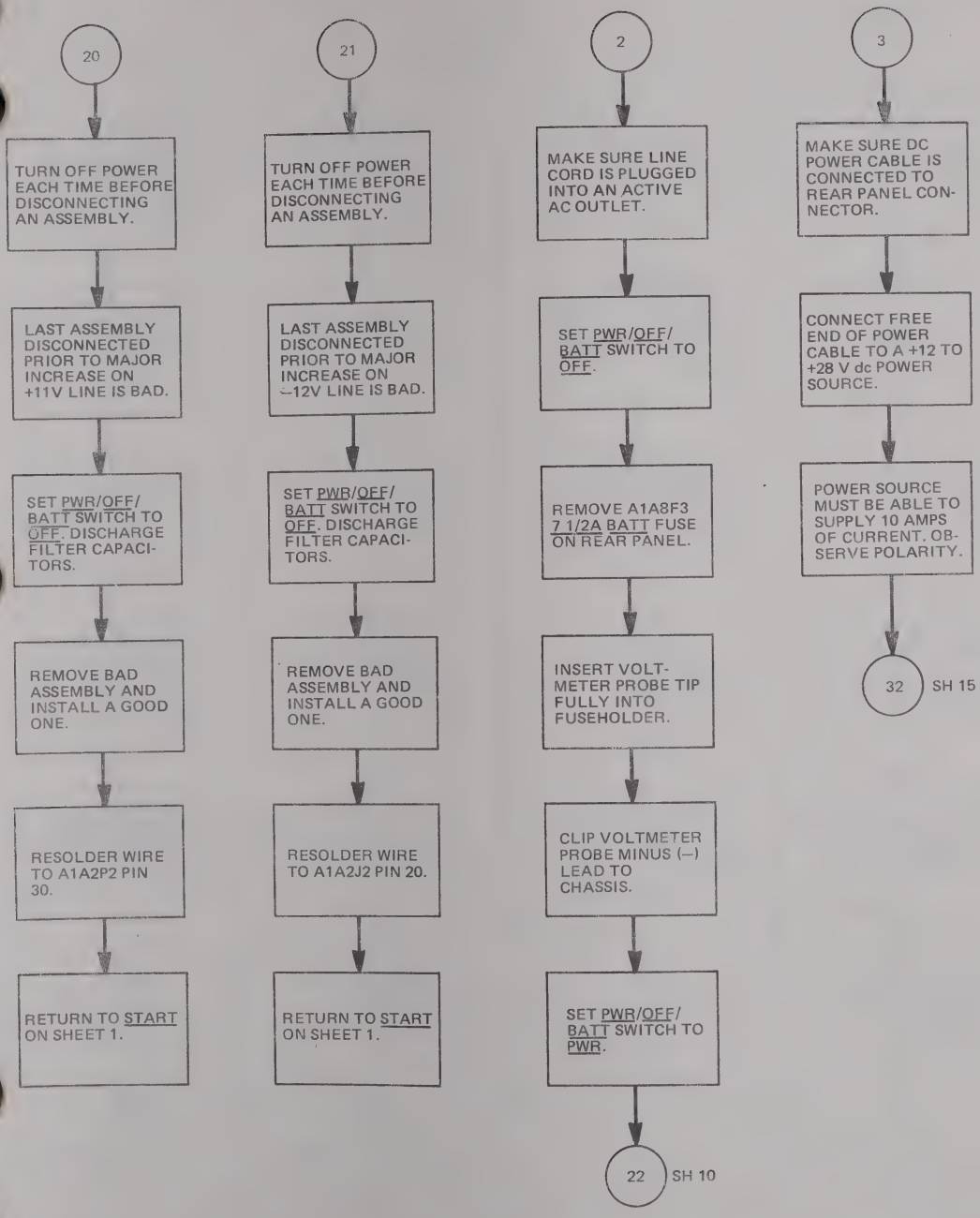
20
TURN OFF POWER EACH TIME BEFORE DISCONNECTING AN ASSEMBLY.
LAST ASSEMBLY DISCONNECTED PRIOR TO MAJOR INCREASE ON +11V LINE IS BAD.
SET PWR/OFF/ BATT SWITCH TO OFF. DISCHARGE FILTER CAPACITORS.
REMOVE BAD ASSEMBLY AND INSTALL A GOOD ONE.
RESOLDER WIRE TO A1A2P2 PIN 30.
RETURN TO START ON SHEET 1.
21
TURN OFF POWER EACH TIME BEFORE DISCONNECTING AN ASSEMBLY.
LAST ASSEMBLY DISCONNECTED PRIOR TO MAJOR INCREASE ON −12V LINE IS BAD.
SET PWR/OFF/ BATT SWITCH TO OFF. DISCHARGE FILTER CAPACITORS.
REMOVE BAD ASSEMBLY AND INSTALL A GOOD ONE.
RESOLDER WIRE TO A1A2J2 PIN 20.
RETURN TO START ON SHEET 1.
2
MAKE SURE LINE CORD IS PLUGGED INTO AN ACTIVE AC OUTLET.
SET PWR/OFF/ BATT SWITCH TO OFF.
REMOVE A1A8F3 7 1/2A BATT FUSE ON REAR PANEL.
INSERT VOLTMETER PROBE TIP FULLY INTO FUSEHOLDER.
CLIP VOLTMETER PROBE MINUS (−) LEAD TO CHASSIS.
SET PWR/OFF/ BATT SWITCH TO PWR.
22
SH 10
3
MAKE SURE DC POWER CABLE IS CONNECTED TO REAR PANEL CONNECTOR.
CONNECT FREE END OF POWER CABLE TO A +12 TO +28 V dc POWER SOURCE.
POWER SOURCE MUST BE ABLE TO SUPPLY 10 AMPS OF CURRENT. OBSERVE POLARITY.
32
SH 15

Figure 5-3. Power supply troubleshooting (sheet 9 of 16).

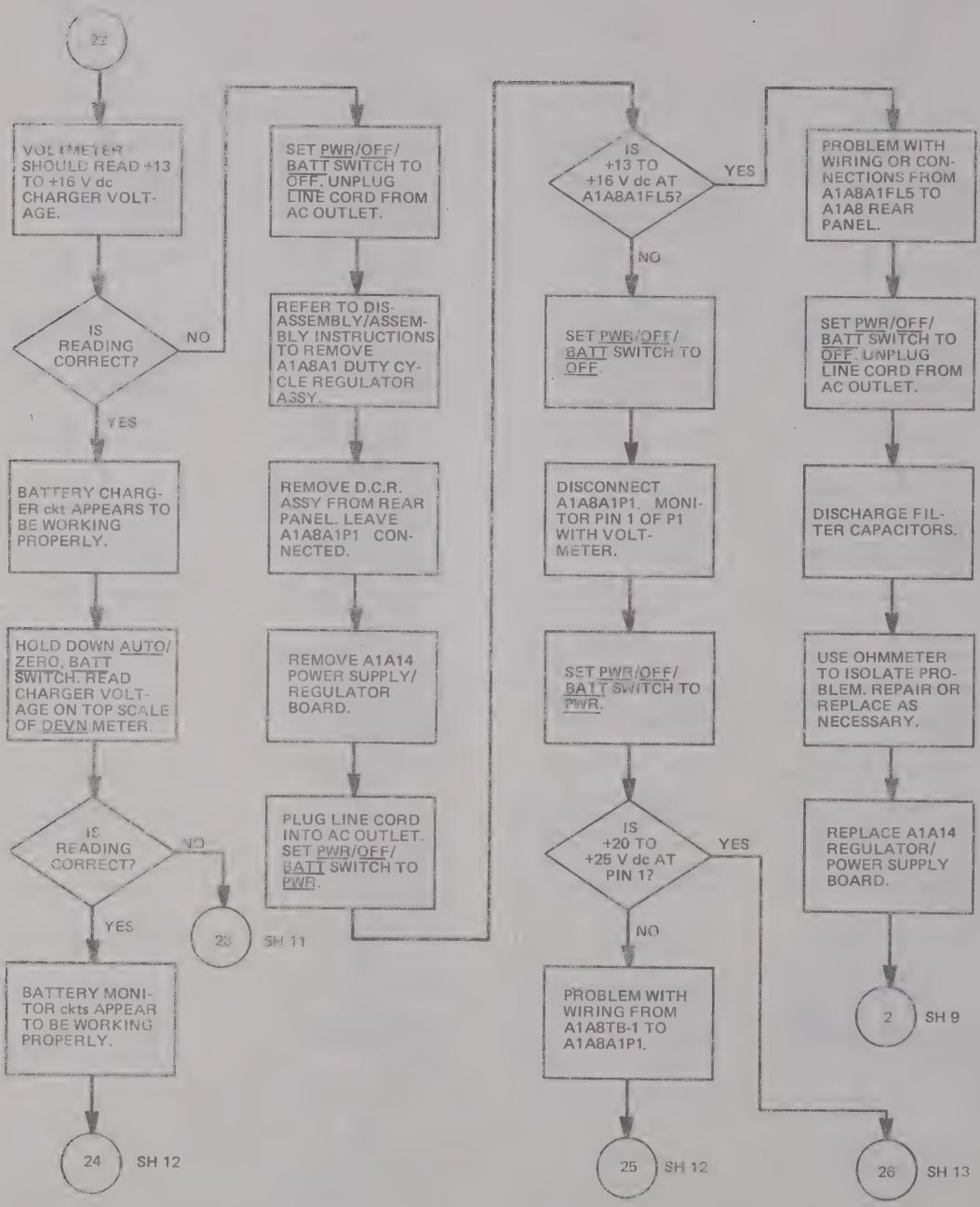
22
VOLTMETER SHOULD READ +13 TO +16 V dc CHARGER VOLTAGE.
IS READING CORRECT?
NO
YES
BATTERY CHARGER ckt APPEARS TO BE WORKING PROPERLY.
HOLD DOWN AUTO/ZERO, BATT SWITCH. READ CHARGER VOLTAGE ON TOP SCALE OF DEVN METER.
IS READING CORRECT?
NO
YES
23
SH 11
BATTERY MONITOR ckts APPEAR TO BE WORKING PROPERLY.
24
SH 12
SET PWR/OFF/BATT SWITCH TO OFF. UNPLUG LINE CORD FROM AC OUTLET.
REFER TO DISASSEMBLY/ASSEMBLY INSTRUCTIONS TO REMOVE A1A8A1 DUTY CYCLE REGULATOR ASSY.
REMOVE D.C.R. ASSY FROM REAR PANEL. LEAVE A1A8A1P1 CONNECTED.
REMOVE A1A14 POWER SUPPLY/REGULATOR BOARD.
PLUG LINE CORD INTO AC OUTLET. SET PWR/OFF/BATT SWITCH TO PWR.
IS +13 TO +16 V dc AT A1A8A1FL5?
YES
NO
SET PWR/OFF/BATT SWITCH TO OFF.
DISCONNECT A1A8A1P1. MONITOR PIN 1 OF P1 WITH VOLTMETER.
SET PWR/OFF/BATT SWITCH TO PWR.
IS +20 TO +25 V dc AT PIN 1?
YES
NO
PROBLEM WITH WIRING FROM A1A8TB-1 TO A1A8A1P1.
25
SH 12
PROBLEM WITH WIRING OR CONNECTIONS FROM A1A8A1FL5 TO A1A8 REAR PANEL.
SET PWR/OFF/BATT SWITCH TO OFF. UNPLUG LINE CORD FROM AC OUTLET.
DISCHARGE FILTER CAPACITORS.
USE OHMMETER TO ISOLATE PROBLEM. REPAIR OR REPLACE AS NECESSARY.
REPLACE A1A14 REGULATOR/POWER SUPPLY BOARD.
2
SH 9
26
SH 13

Figure 5-3. Power supply troubleshooting (sheet 10 of 16).

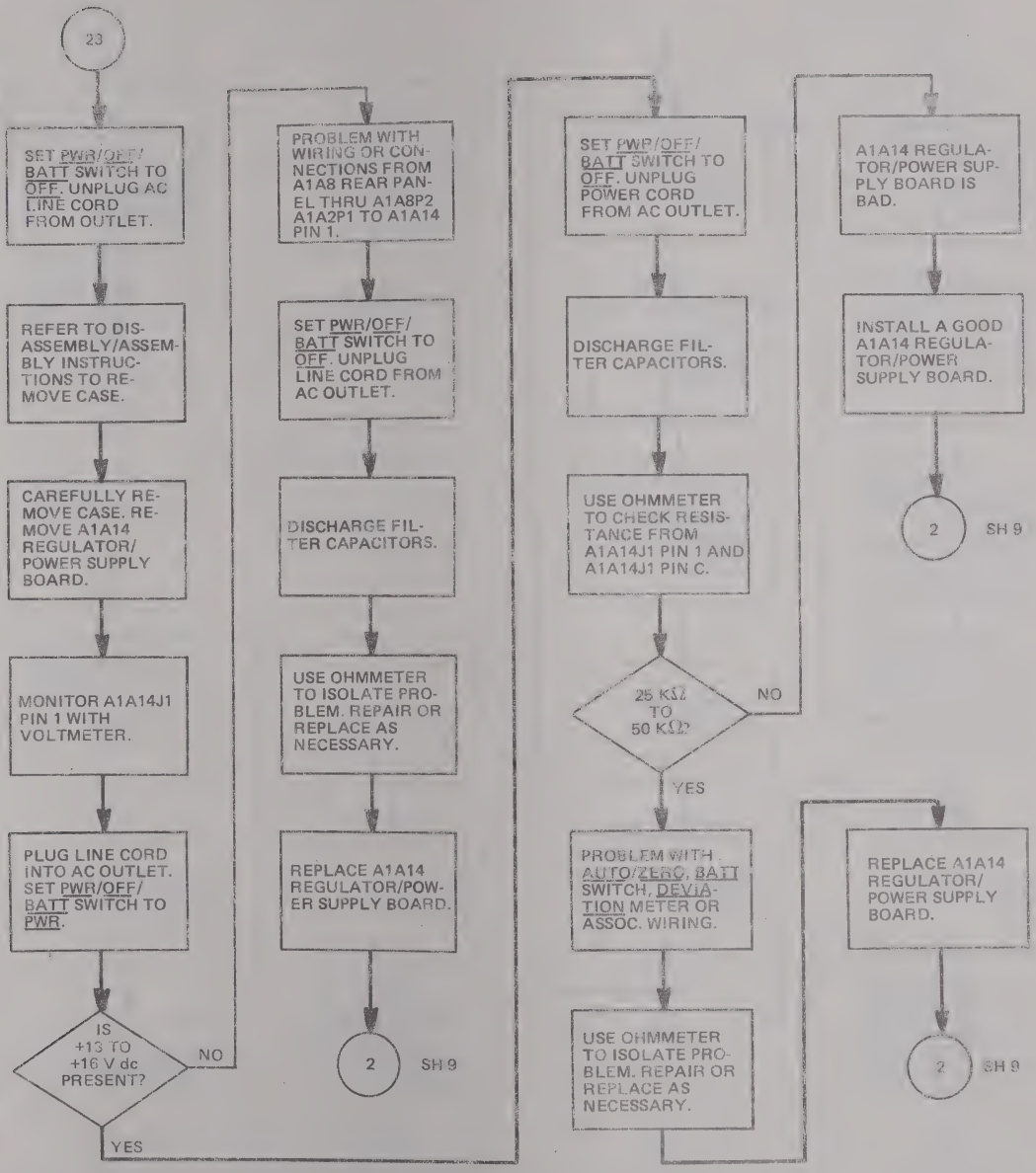
23
SET PWR/OFF/BATT SWITCH TO OFF. UNPLUG AC LINE CORD FROM OUTLET.
REFER TO DISASSEMBLY/ASSEMBLY INSTRUCTIONS TO REMOVE CASE.
CAREFULLY REMOVE CASE. REMOVE A1A14 REGULATOR/POWER SUPPLY BOARD.
MONITOR A1A14J1 PIN 1 WITH VOLTMETER.
PLUG LINE CORD INTO AC OUTLET. SET PWR/OFF/BATT SWITCH TO PWR.
IS +13 TO +16 V dc PRESENT?
NO
YES
PROBLEM WITH WIRING OR CONNECTIONS FROM A1A8 REAR PANEL THRU A1A8P2 A1A2P1 TO A1A14 PIN 1.
SET PWR/OFF/BATT SWITCH TO OFF. UNPLUG LINE CORD FROM AC OUTLET.
DISCHARGE FILTER CAPACITORS.
USE OHMMETER TO ISOLATE PROBLEM. REPAIR OR REPLACE AS NECESSARY.
REPLACE A1A14 REGULATOR/POWER SUPPLY BOARD.
2
SH 9
SET PWR/OFF/BATT SWITCH TO OFF. UNPLUG POWER CORD FROM AC OUTLET.
DISCHARGE FILTER CAPACITORS.
USE OHMMETER TO CHECK RESISTANCE FROM A1A14J1 PIN 1 AND A1A14J1 PIN C.
25 KΩ TO 50 KΩ?
NO
YES
PROBLEM WITH AUTO/ZERO, BATT SWITCH, DEVIATION METER OR ASSOC. WIRING.
USE OHMMETER TO ISOLATE PROBLEM. REPAIR OR REPLACE AS NECESSARY.
A1A14 REGULATOR/POWER SUPPLY BOARD IS BAD.
INSTALL A GOOD A1A14 REGULATOR/POWER SUPPLY BOARD.
2
SH 9
REPLACE A1A14 REGULATOR/POWER SUPPLY BOARD.
2
SH 9

Figure 5-3. Power supply troubleshooting (sheet 11 of 16).

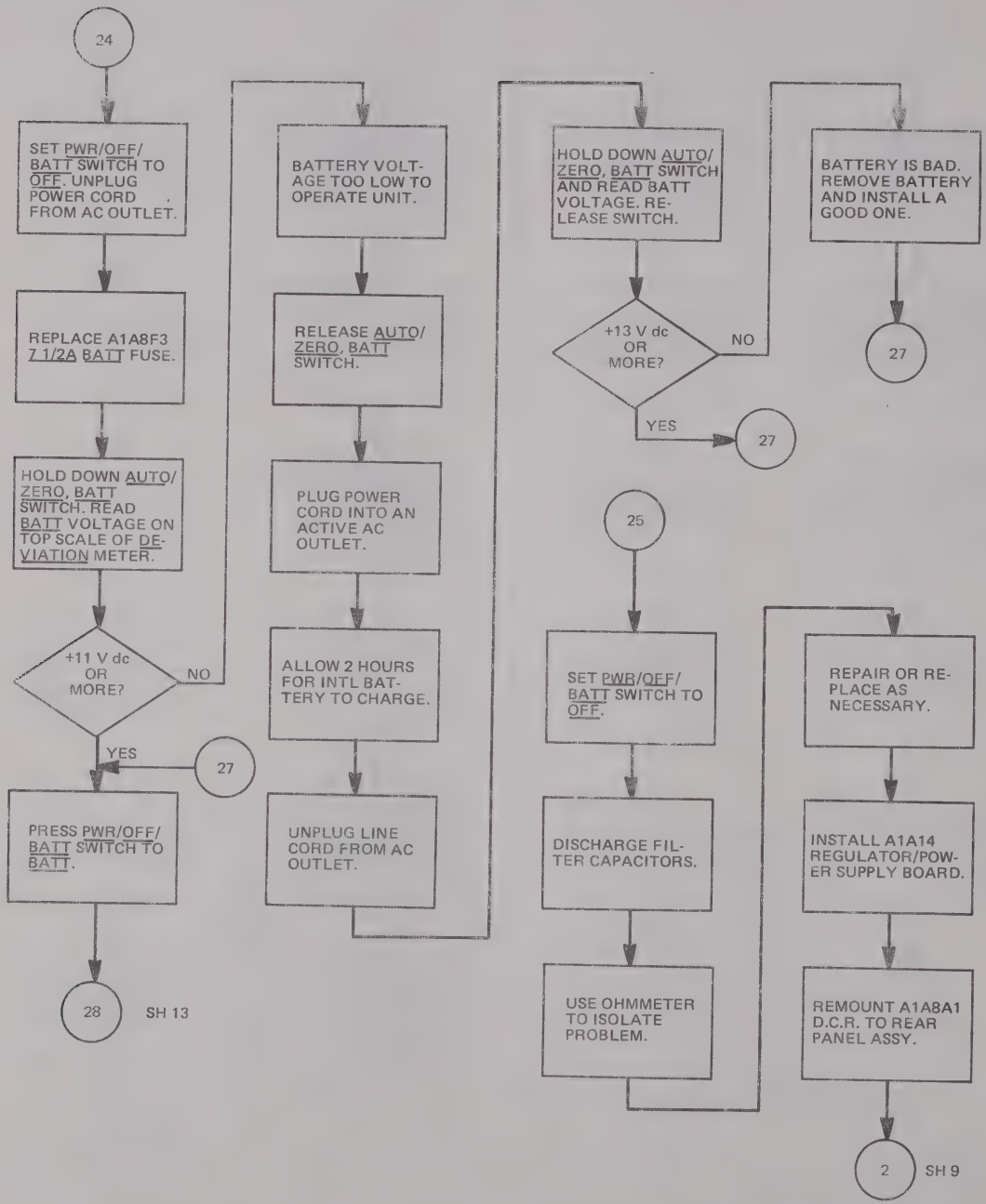
24
SET PWR/OFF/ BATT SWITCH TO OFF. UNPLUG POWER CORD FROM AC OUTLET.
REPLACE A1A8F3 7 1/2A BATT FUSE.
HOLD DOWN AUTO/ ZERO, BATT SWITCH. READ BATT VOLTAGE ON TOP SCALE OF DE-VIATION METER.
+11 V dc OR MORE?
NO
YES
27
PRESS PWR/OFF/ BATT SWITCH TO BATT.
28
SH 13
BATTERY VOLT-AGE TOO LOW TO OPERATE UNIT.
RELEASE AUTO/ ZERO, BATT SWITCH.
PLUG POWER CORD INTO AN ACTIVE AC OUTLET.
ALLOW 2 HOURS FOR INTL BAT-TERY TO CHARGE.
UNPLUG LINE CORD FROM AC OUTLET.
HOLD DOWN AUTO/ ZERO, BATT SWITCH AND READ BATT VOLTAGE. RE-LEASE SWITCH.
+13 V dc OR MORE?
NO
YES
27
BATTERY IS BAD. REMOVE BATTERY AND INSTALL A GOOD ONE.
27
25
SET PWR/OFF/ BATT SWITCH TO OFF.
DISCHARGE FIL-TER CAPACITORS.
USE OHMMETER TO ISOLATE PROBLEM.
REPAIR OR RE-PLACE AS NECESSARY.
INSTALL A1A14 REGULATOR/POW-ER SUPPLY BOARD.
REMOUNT A1A8A1 D.C.R. TO REAR PANEL ASSY.
2
SH 9

Figure 5-3. Power supply troubleshooting (sheet 12 of 16).

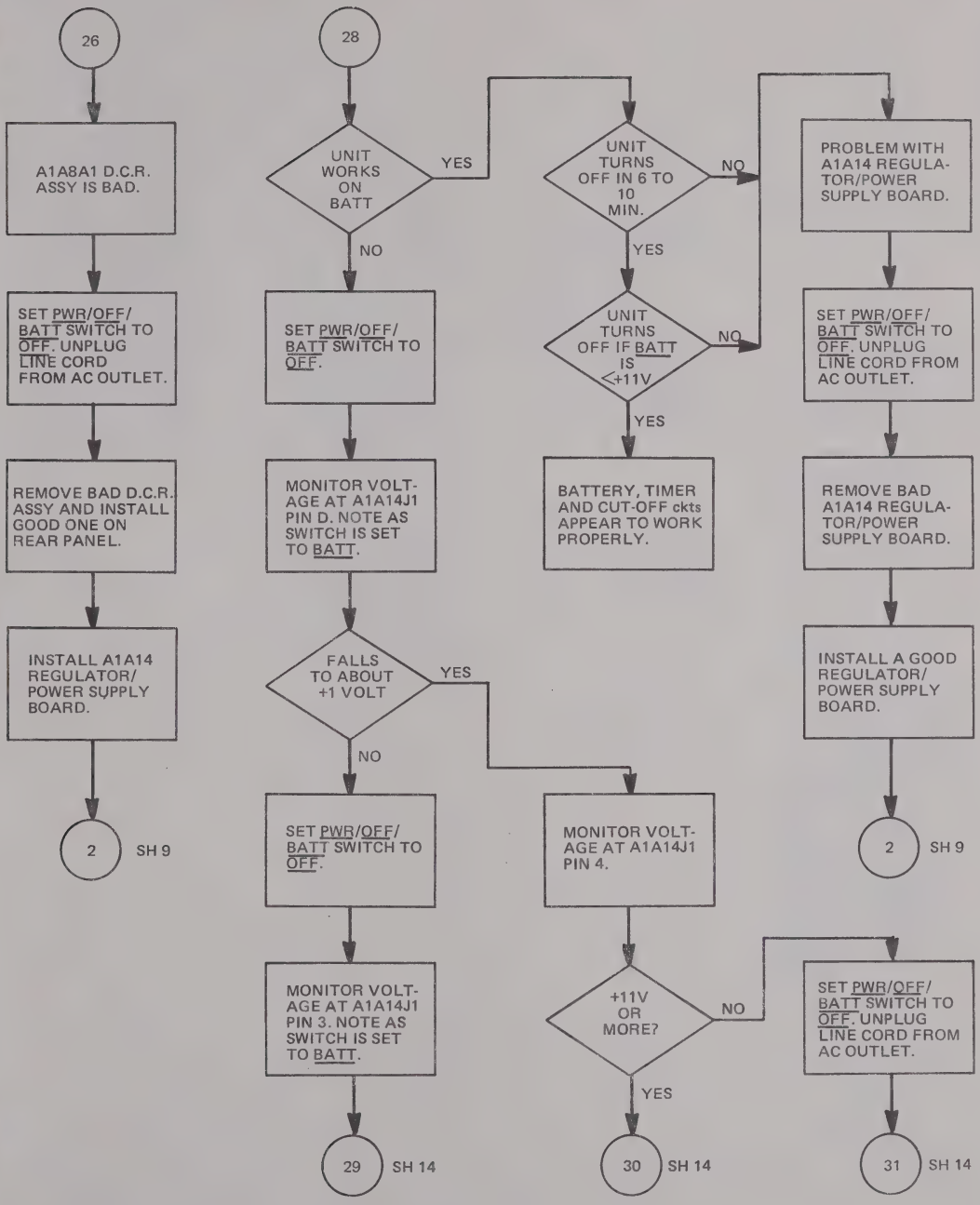
26
A1A8A1 D.C.R. ASSY IS BAD.
SET PWR/OFF/ BATT SWITCH TO OFF. UNPLUG LINE CORD FROM AC OUTLET.
REMOVE BAD D.C.R. ASSY AND INSTALL GOOD ONE ON REAR PANEL.
INSTALL A1A14 REGULATOR/ POWER SUPPLY BOARD.
2
SH 9
28
UNIT WORKS ON BATT
YES
NO
SET PWR/OFF/ BATT SWITCH TO OFF.
MONITOR VOLT-AGE AT A1A14J1 PIN D. NOTE AS SWITCH IS SET TO BATT.
FALLS TO ABOUT +1 VOLT
YES
NO
SET PWR/OFF/ BATT SWITCH TO OFF.
MONITOR VOLT-AGE AT A1A14J1 PIN 3. NOTE AS SWITCH IS SET TO BATT.
29
SH 14
UNIT TURNS OFF IN 6 TO 10 MIN.
NO
YES
UNIT TURNS OFF IF BATT IS <+11V
NO
YES
BATTERY, TIMER AND CUT-OFF ckts APPEAR TO WORK PROPERLY.
MONITOR VOLT-AGE AT A1A14J1 PIN 4.
+11V OR MORE?
NO
YES
30
SH 14
PROBLEM WITH A1A14 REGULA-TOR/POWER SUPPLY BOARD.
SET PWR/OFF/ BATT SWITCH TO OFF. UNPLUG LINE CORD FROM AC OUTLET.
REMOVE BAD A1A14 REGULA-TOR/POWER SUPPLY BOARD.
INSTALL A GOOD REGULATOR/ POWER SUPPLY BOARD.
2
SH 9
SET PWR/OFF/ BATT SWITCH TO OFF. UNPLUG LINE CORD FROM AC OUTLET.
31
SH 14

Figure 5-3. Power supply troubleshooting (sheet 13 of 16).

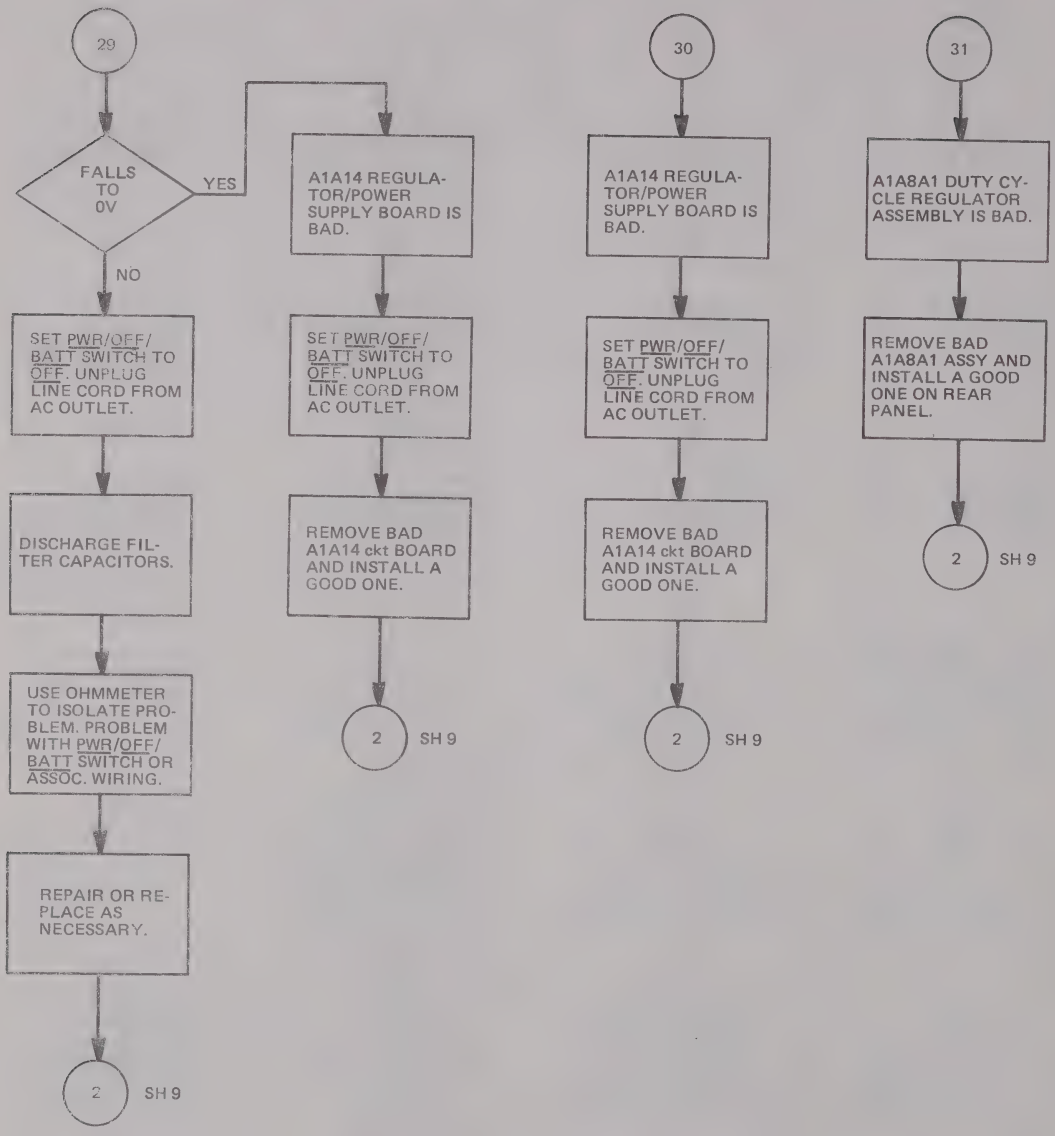
29
FALLS TO 0V
YES
NO
A1A14 REGULATOR/POWER SUPPLY BOARD IS BAD.
SET PWR/OFF/BATT SWITCH TO OFF. UNPLUG LINE CORD FROM AC OUTLET.
SET PWR/OFF/BATT SWITCH TO OFF. UNPLUG LINE CORD FROM AC OUTLET.
DISCHARGE FILTER CAPACITORS.
REMOVE BAD A1A14 ckt BOARD AND INSTALL A GOOD ONE.
USE OHMMETER TO ISOLATE PROBLEM. PROBLEM WITH PWR/OFF/BATT SWITCH OR ASSOC. WIRING.
REPAIR OR REPLACE AS NECESSARY.
2
SH 9
2
SH 9
30
A1A14 REGULATOR/POWER SUPPLY BOARD IS BAD.
SET PWR/OFF/BATT SWITCH TO OFF. UNPLUG LINE CORD FROM AC OUTLET.
REMOVE BAD A1A14 ckt BOARD AND INSTALL A GOOD ONE.
2
SH 9
31
A1A8A1 DUTY CYCLE REGULATOR ASSEMBLY IS BAD.
REMOVE BAD A1A8A1 ASSY AND INSTALL A GOOD ONE ON REAR PANEL.
2
SH 9

Figure 5-3. Power supply troubleshooting (sheet 14 of 16).

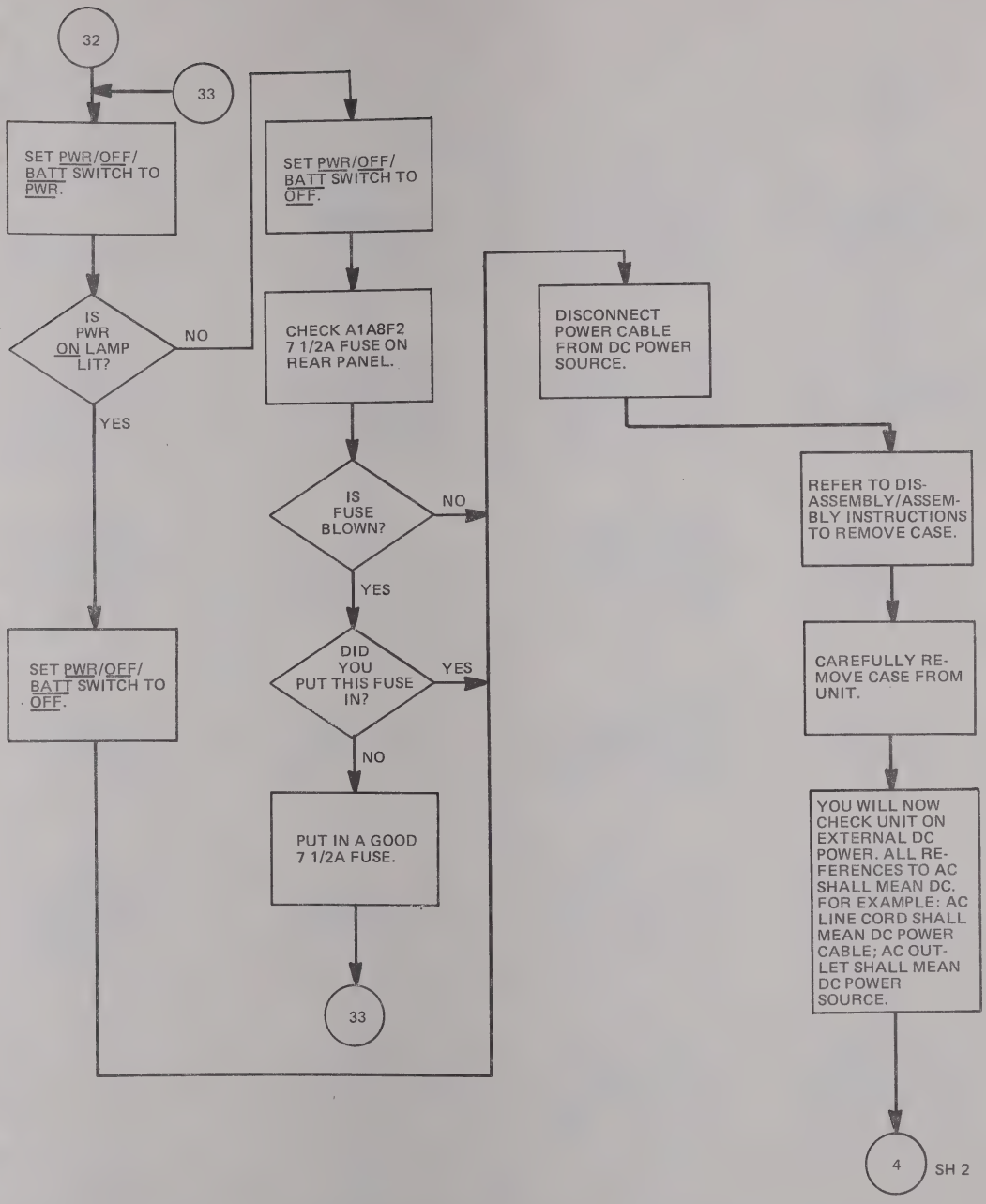
32
33
SET PWR/OFF/ BATT SWITCH TO PWR.
IS PWR ON LAMP LIT?
NO
YES
SET PWR/OFF/ BATT SWITCH TO OFF.
SET PWR/OFF/ BATT SWITCH TO OFF.
CHECK A1A8F2 7 1/2A FUSE ON REAR PANEL.
IS FUSE BLOWN?
NO
YES
DID YOU PUT THIS FUSE IN?
YES
NO
PUT IN A GOOD 7 1/2A FUSE.
33
DISCONNECT POWER CABLE FROM DC POWER SOURCE.
REFER TO DIS-ASSEMBLY/ASSEM-BLY INSTRUCTIONS TO REMOVE CASE.
CAREFULLY RE-MOVE CASE FROM UNIT.
YOU WILL NOW CHECK UNIT ON EXTERNAL DC POWER. ALL RE-FERENCES TO AC SHALL MEAN DC. FOR EXAMPLE: AC LINE CORD SHALL MEAN DC POWER CABLE; AC OUT-LET SHALL MEAN DC POWER SOURCE.
4
SH 2

Figure 5-3. Power supply troubleshooting (sheet 15 of 16).

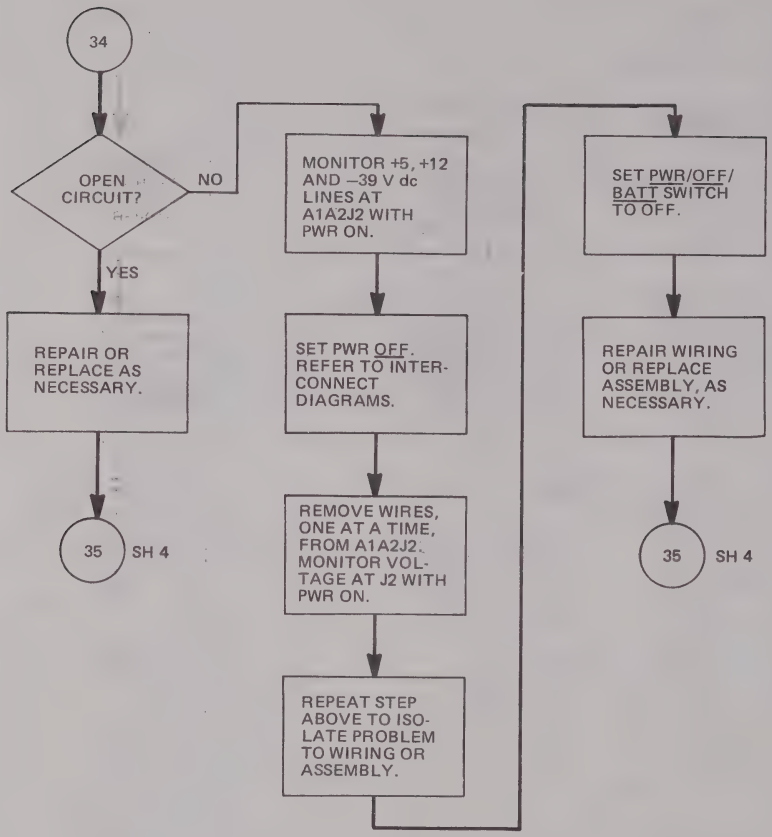
34
OPEN CIRCUIT?
NO
YES
REPAIR OR REPLACE AS NECESSARY.
35
SH 4
MONITOR +5, +12 AND −39 V dc LINES AT A1A2J2 WITH PWR ON.
SET PWR OFF. REFER TO INTER-CONNECT DIAGRAMS.
REMOVE WIRES, ONE AT A TIME, FROM A1A2J2. MONITOR VOL-TAGE AT J2 WITH PWR ON.
REPEAT STEP ABOVE TO ISO-LATE PROBLEM TO WIRING OR ASSEMBLY.
SET PWR/OFF/ BATT SWITCH TO OFF.
REPAIR WIRING OR REPLACE ASSEMBLY, AS NECESSARY.
35
SH 4

Figure 5-3. Power supply troubleshooting (sheet 16 of 16).

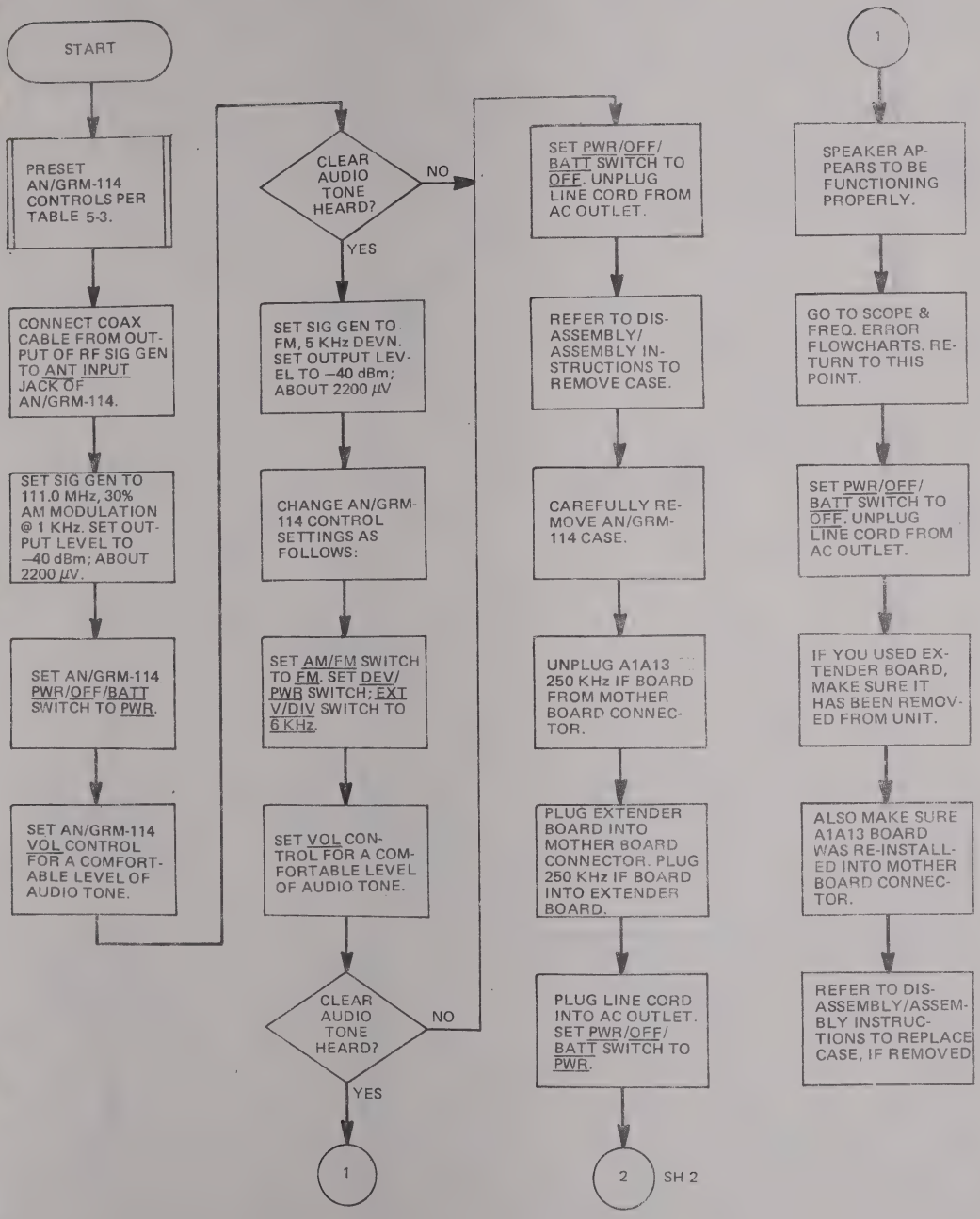
START
PRESET AN/GRM-114 CONTROLS PER TABLE 5-3.
CONNECT COAX CABLE FROM OUTPUT OF RF SIG GEN TO ANT INPUT JACK OF AN/GRM-114.
SET SIG GEN TO 111.0 MHz, 30% AM MODULATION @ 1 KHz. SET OUTPUT LEVEL TO –40 dBm; ABOUT 2200 μV.
SET AN/GRM-114 PWR/OFF/BATT SWITCH TO PWR.
SET AN/GRM-114 VOL CONTROL FOR A COMFORTABLE LEVEL OF AUDIO TONE.
CLEAR AUDIO TONE HEARD?
NO
YES
SET SIG GEN TO FM, 5 KHz DEVN. SET OUTPUT LEVEL TO –40 dBm; ABOUT 2200 μV
CHANGE AN/GRM-114 CONTROL SETTINGS AS FOLLOWS:
SET AM/FM SWITCH TO FM. SET DEV/PWR SWITCH; EXT V/DIV SWITCH TO 6 KHz.
SET VOL CONTROL FOR A COMFORTABLE LEVEL OF AUDIO TONE.
CLEAR AUDIO TONE HEARD?
NO
YES
1
SET PWR/OFF/BATT SWITCH TO OFF. UNPLUG LINE CORD FROM AC OUTLET.
REFER TO DISASSEMBLY/ASSEMBLY INSTRUCTIONS TO REMOVE CASE.
CAREFULLY REMOVE AN/GRM-114 CASE.
UNPLUG A1A13 250 KHz IF BOARD FROM MOTHER BOARD CONNECTOR.
PLUG EXTENDER BOARD INTO MOTHER BOARD CONNECTOR. PLUG 250 KHz IF BOARD INTO EXTENDER BOARD.
PLUG LINE CORD INTO AC OUTLET. SET PWR/OFF/BATT SWITCH TO PWR.
2
SH 2
1
SPEAKER APPEARS TO BE FUNCTIONING PROPERLY.
GO TO SCOPE & FREQ. ERROR FLOWCHARTS. RETURN TO THIS POINT.
SET PWR/OFF/BATT SWITCH TO OFF. UNPLUG LINE CORD FROM AC OUTLET.
IF YOU USED EXTENDER BOARD, MAKE SURE IT HAS BEEN REMOVED FROM UNIT.
ALSO MAKE SURE A1A13 BOARD WAS RE-INSTALLED INTO MOTHER BOARD CONNECTOR.
REFER TO DISASSEMBLY/ASSEMBLY INSTRUCTIONS TO REPLACE CASE, IF REMOVED

Figure 5-4. Audio frequency monitor troubleshooting (sheet 1 of 4).

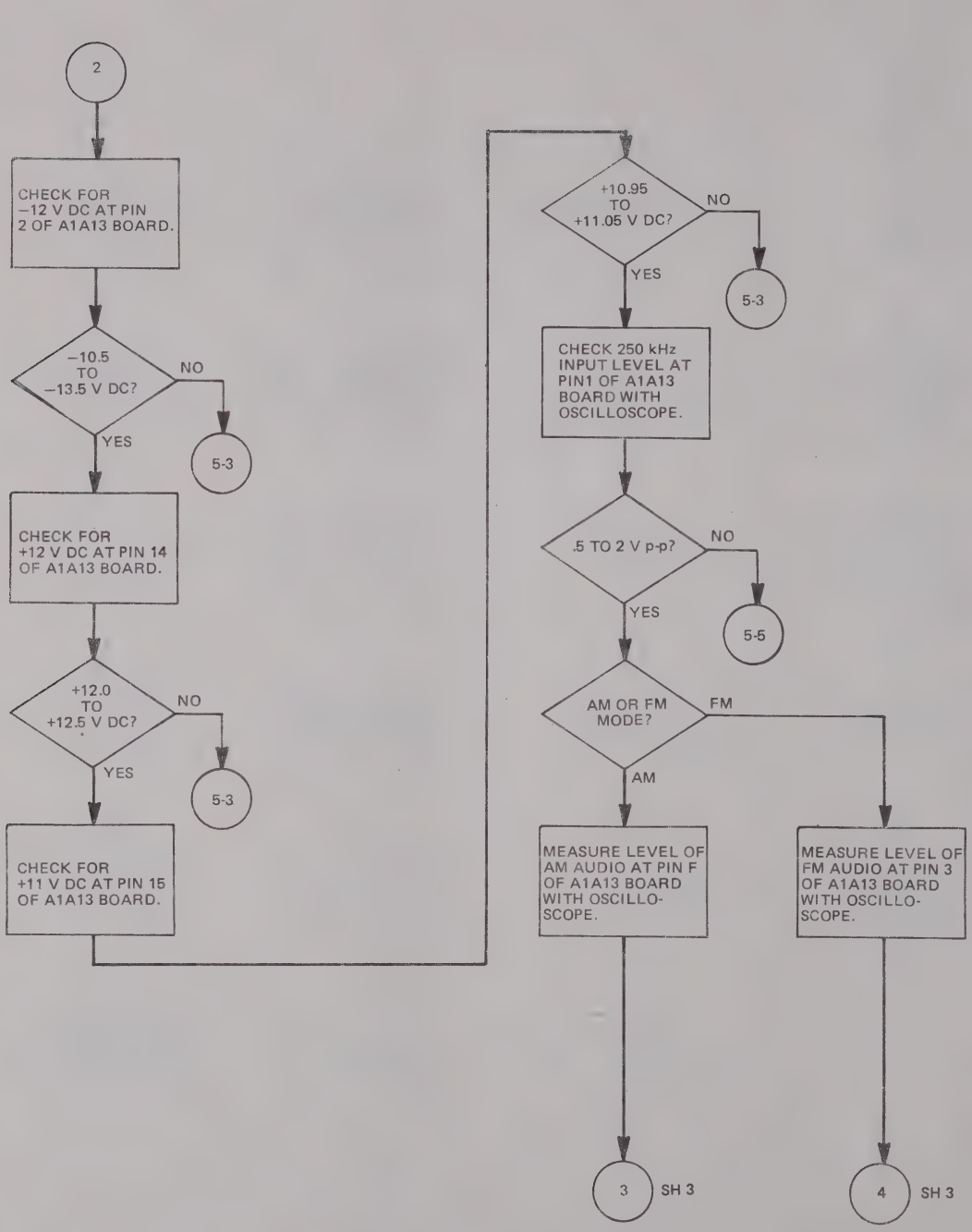

Figure 5-4. Audio frequency monitor troubleshooting (sheet 2 of 4).

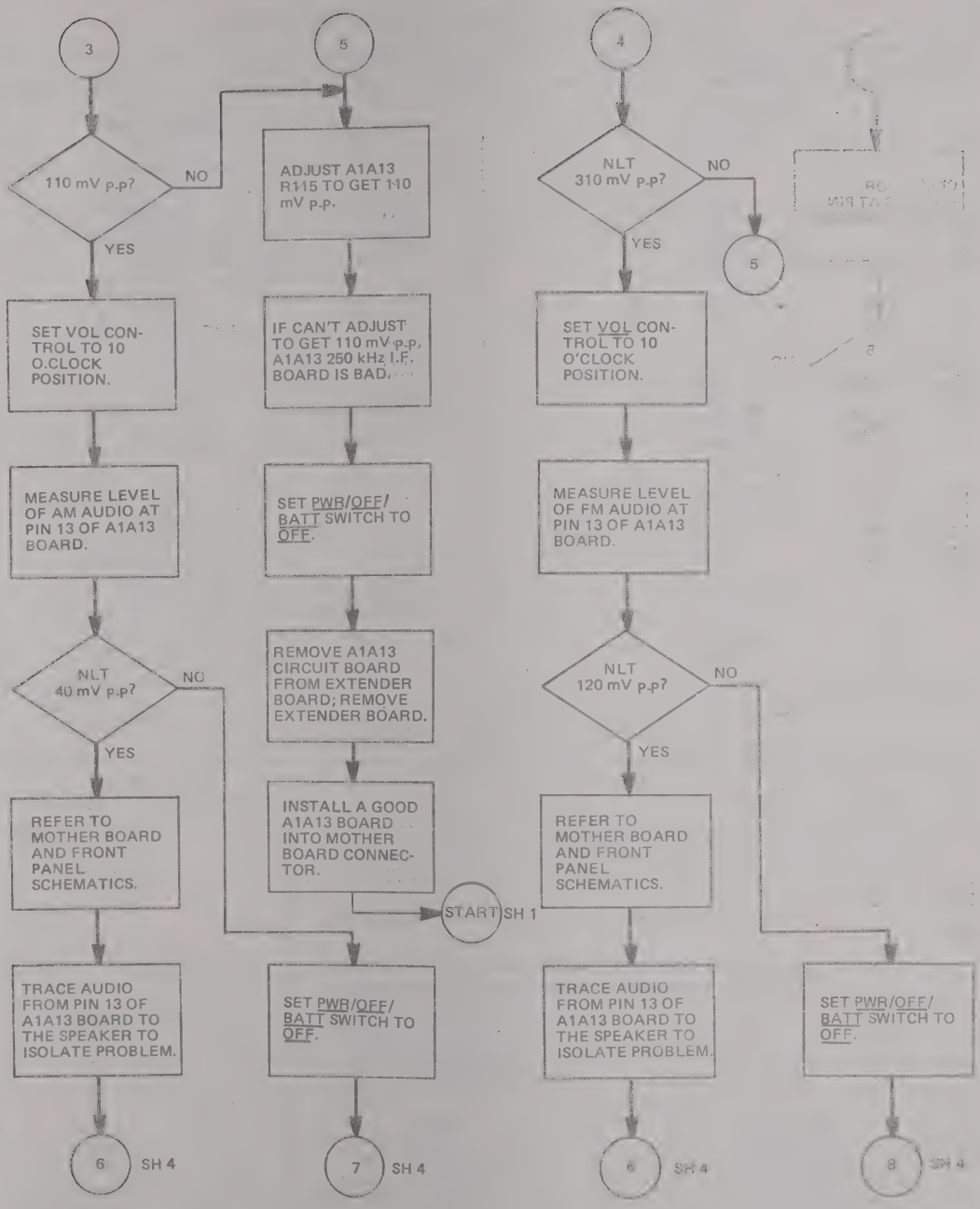
3
110 mV p-p?
NO
YES
SET VOL CONTROL TO 10 O.CLOCK POSITION.
MEASURE LEVEL OF AM AUDIO AT PIN 13 OF A1A13 BOARD.
NLT 40 mV p-p?
NO
YES
REFER TO MOTHER BOARD AND FRONT PANEL SCHEMATICS.
TRACE AUDIO FROM PIN 13 OF A1A13 BOARD TO THE SPEAKER TO ISOLATE PROBLEM.
6
SH 4
5
ADJUST A1A13 R115 TO GET 110 mV p-p.
IF CAN'T ADJUST TO GET 110 mV p-p, A1A13 250 kHz I.F. BOARD IS BAD.
SET PWR/OFF/BATT SWITCH TO OFF.
REMOVE A1A13 CIRCUIT BOARD FROM EXTENDER BOARD; REMOVE EXTENDER BOARD.
INSTALL A GOOD A1A13 BOARD INTO MOTHER BOARD CONNECTOR.
START
SH 1
SET PWR/OFF/BATT SWITCH TO OFF.
7
SH 4
4
NLT 310 mV p-p?
NO
YES
5
SET VOL CONTROL TO 10 O'CLOCK POSITION.
MEASURE LEVEL OF FM AUDIO AT PIN 13 OF A1A13 BOARD.
NLT 120 mV p-p?
NO
YES
REFER TO MOTHER BOARD AND FRONT PANEL SCHEMATICS.
TRACE AUDIO FROM PIN 13 OF A1A13 BOARD TO THE SPEAKER TO ISOLATE PROBLEM.
6
SH 4
SET PWR/OFF/BATT SWITCH TO OFF.
8
SH 4

Figure 5-4. Audio frequency monitor troubleshooting (sheet 3 of 4).

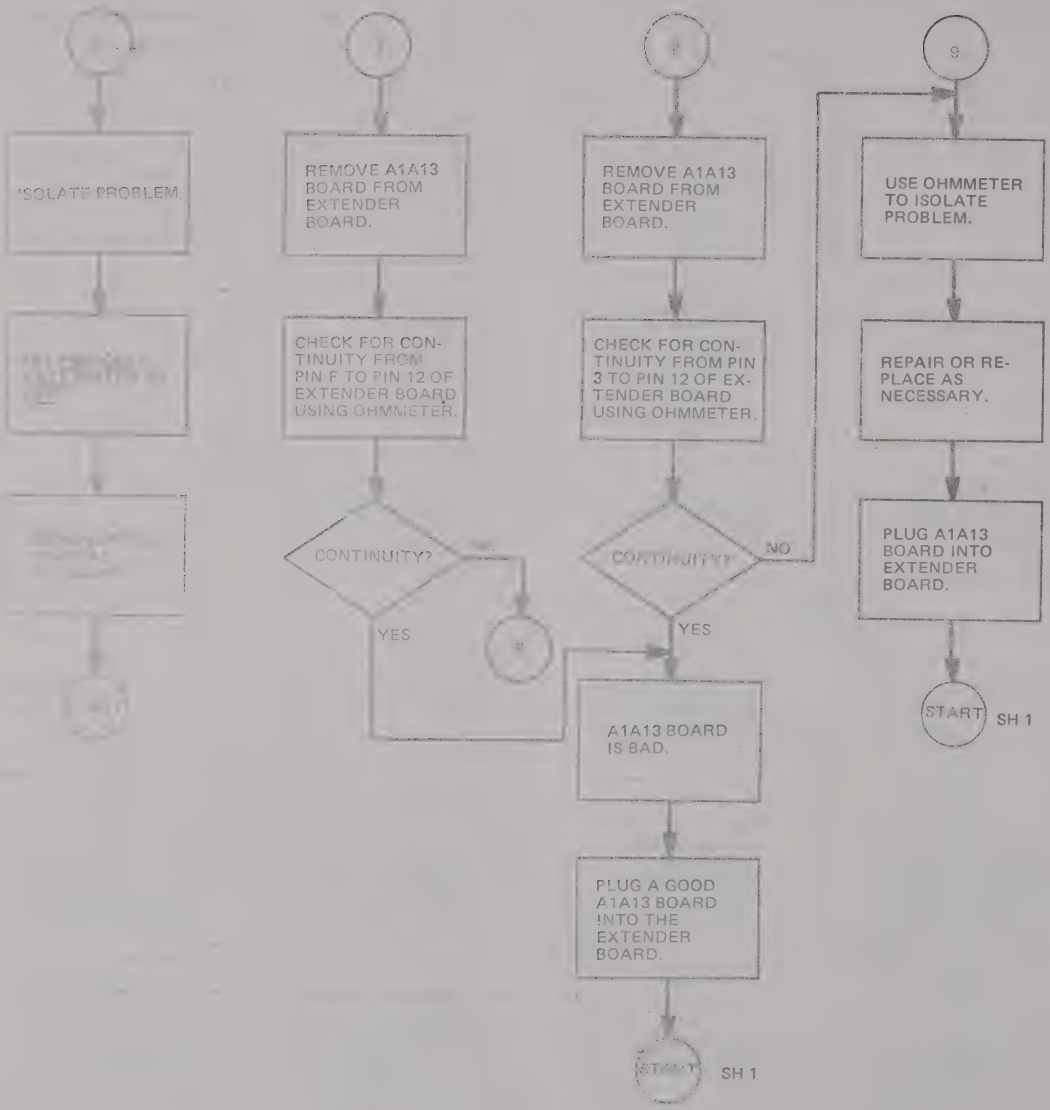
ISOLATE PROBLEM.
REMOVE A1A13 BOARD FROM EXTENDER BOARD.
CHECK FOR CONTINUITY FROM PIN F TO PIN 12 OF EXTENDER BOARD USING OHMMETER.
CONTINUITY?
NO
YES
REMOVE A1A13 BOARD FROM EXTENDER BOARD.
CHECK FOR CONTINUITY FROM PIN 3 TO PIN 12 OF EXTENDER BOARD USING OHMMETER.
CONTINUITY?
NO
YES
A1A13 BOARD IS BAD.
PLUG A GOOD A1A13 BOARD INTO THE EXTENDER BOARD.
START
SH 1
USE OHMMETER TO ISOLATE PROBLEM.
REPAIR OR REPLACE AS NECESSARY.
PLUG A1A13 BOARD INTO EXTENDER BOARD.
START
SH 1

Figure 5-1. [illegible] monitor troubleshooting (sheet 1 of 4).

Table 5-5. Receiver Troubleshooting - Initial Conditions.

Control	Setting
INTENSITY	As required
EXT V/DIV	15 KHz
EXT V/DIV Vernier	CAL
AC/OFF/DC	DC
SWEEP	1 mS
SWEEP Vernier	CAL
MODULATION FREQ Hz	0000.0
INT MOD/OFF	OFF
VERT	Midrange
ANALY DISPR	OFF
HORIZ	Midrange
1.5/5/15 KHz	15
AM/FM	AM
BFO/OFF	OFF
FREQUENCY MHz	000 000 0
VOL	Fully ccw
INT MOD/RCVR	RCVR
SQUELCH	Fully ccw
DEV/PWR	SIG
GEN/RCVR	RCVR
RCVR WIDE/MID/NARROW	NARROW
RF LEVEL/BFO INJECTION	10
HI LBL/μV x 100/NORM	NORM
PWR/OFF/BATT	PWR

Table 5-6. 1st and 2nd Local Oscillators (Sheet 1 of 3).

Reading	Meaning
F_L	Frequency of 2ND local oscillator, determined by value of four rightmost thumbwheels of FREQUENCY MHz subtracted from 1080.0000 MHz. 1080.0000 - XXXX=F_L.
$F_L/10$	Frequency delivered to 1080 MHz Multiplier/Mixer.
(F_L/10) - 100 MHz	Frequency produced within 79-80 MHz Loop Circuit Board, delivered to 100 MHz Multiplier/108 MHz Mixer.
COMB FREQUENCY (F_C)	LEFTMOST DIGIT OF FREQUENCY MHz THUMBWHEELS → F_C 0 or 1 → 1100 MHz 2 or 3 → 1300 MHz 4 or 5 → 1500 MHz 6 or 7 → 1700 MHz 8 or 9 → 1900 MHz

Table 5-6. 1st and 2nd Local Oscillators (Sheet 2 of 3).

Reading	Meaning
F_{VCO}	Frequency generated by 1200-2200 MHz Oscillator. It equals 1200 MHz plus the value of the three leftmost digits of the FREQUENCY MHz thumbwheels (in MHz).
F'_{VCO}	Frequency generated by 1200-2200 MHz Oscillator as a result of an external voltage control.
V_{VCO}	DC voltage sent to 1200-2200 MHz Oscillator from the tuning integrator in the V.C.O. Tuner Circuit Board. This voltage controls the frequency of the 1200-2200 MHz Oscillator.
V'_{VCO}	DC voltages sent to the 1200-2200 MHz Oscillator by an external dc source.
F_{VCO}-F_C	Frequency delivered to Heterodyne Amplifier ÷2 Prescaler from the High Frequency Multiplier/Mixer.
$\frac{F_{VCO}-F_C}{2}$	Frequency sent to the High Frequency Phase Lock Circuit Board from the Heterodyne Amplifier ÷2 Prescaler.
Spectrum Analyzer Display of High Frequency Multiplier/Mixer Test Point	Refer to the table of F_C values. For the selected frequency the required power level is −18 dBm to −25 dBm. The unselected frequencies must have power level at least 25 dBm below that of the selected frequency. NOTE The test point is located in the center of the left-hand enclosure end cover of the High Frequency Multiplier Mixer A1A26 (as viewed from the front panel). Insert the High Frequency Multiplier Mixer sniffer (refer to Table 5-1) into the indentation.

Table 5-6. 1st and 2nd Local Oscillators (Sheet 3 of 3).

Reading	Meaning

SWITCHING VOLTAGES FOR F_C

V.C.O. Tuner Circuit Board

	A1A11P-1			A1A26P-4	
	INPUTS			OUTPUT	High Freq. Mult./Mixer
F_C	Pin 1	Pin 2	Pin 3	+11V at Pin No.	+11V at Pin No.
1100 MHz	0V	0V	0V	10	1
1300 MHz	0V	0V	+5V	11	2
1500 MHz	0V	+5V	0V	12	3
1100 MHz	0V	+5V	+5V	13	4
1900 MHz	+5V	0V	0V	14	5

RELATIONSHIP BETWEEN V_{VCO} AND F_{VCO}

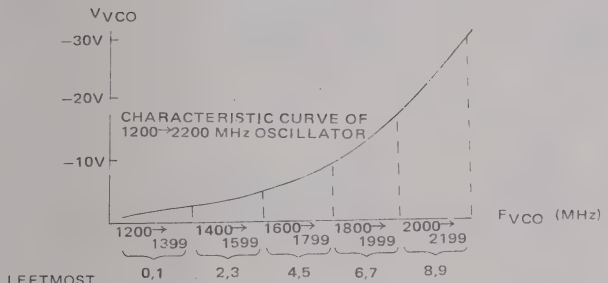

RELATIONSHIP BETWEEN V_{VCO} AND F_{VCO}

Operating open-loop, as in troubleshooting, the voltage V_{VCO} will be one of two possible values for each range. If F'_{VCO} is below F_{VCO}, V_{VCO} will go to the largest negative value of the range in an effort to raise F_{VCO}. If F'_{VCO} is above F_{VCO}, V_{VCO} will go to the smallest (negative) value for the range.

When the High Frequency Phase-Lock Loop is operating closed loop, as in normal operation, the value of V_{VCO} will correspond to a particular frequency based on the characteristic curve of the 1200-2200 MHz Oscillator. When V_{VCO} is monitored (using a "tee" connector), while the leftmost digit of the FREQUENCY MHz thumbwheels is changed, in order through all possible settings, V_{VCO} should smoothly and continuously increase, in negative voltage, as F_{VCO} increases.

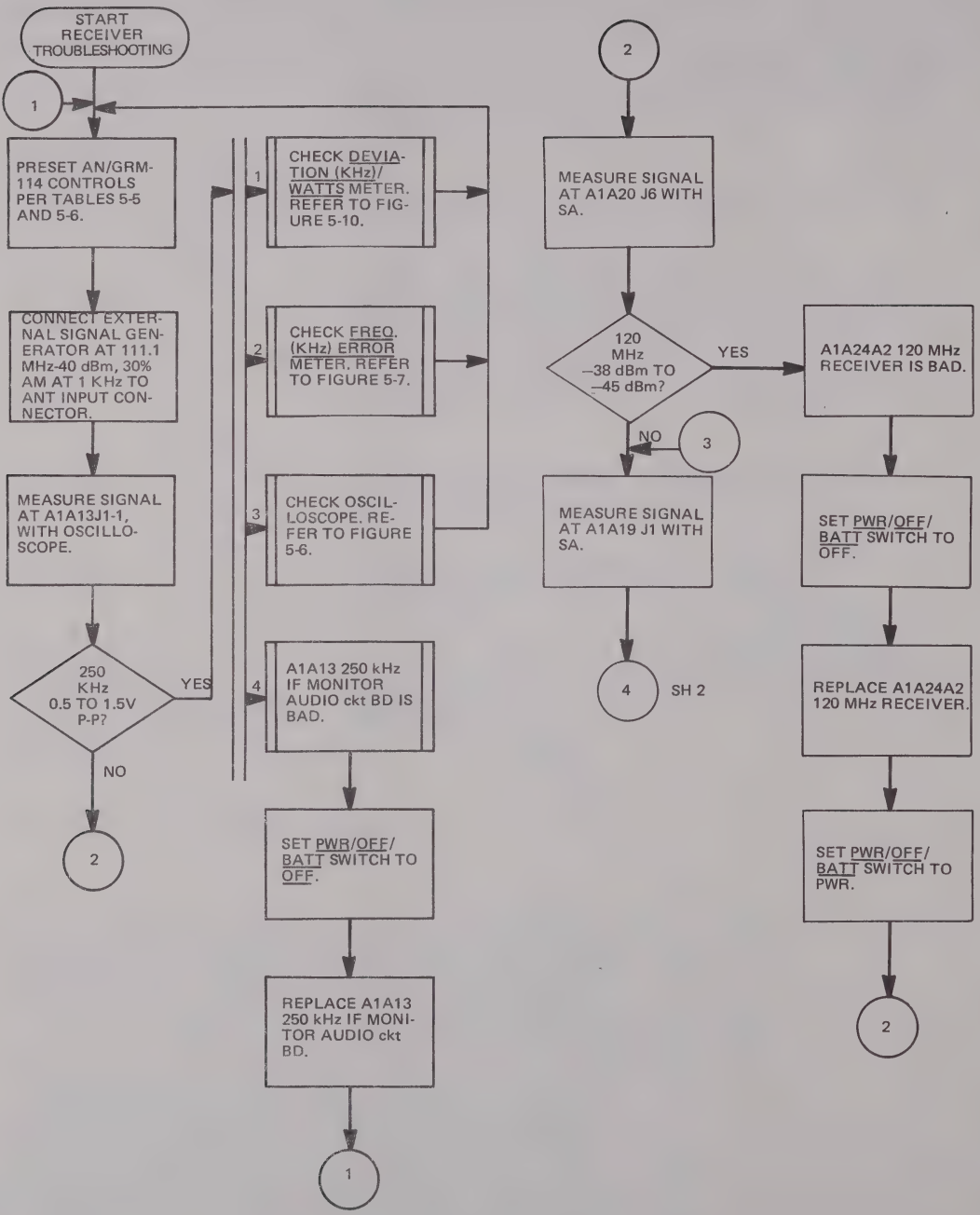
START RECEIVER TROUBLESHOOTING
1
PRESET AN/GRM-114 CONTROLS PER TABLES 5-5 AND 5-6.
CONNECT EXTERNAL SIGNAL GENERATOR AT 111.1 MHz-40 dBm, 30% AM AT 1 KHz TO ANT INPUT CONNECTOR.
MEASURE SIGNAL AT A1A13J1-1, WITH OSCILLOSCOPE.
250 KHz 0.5 TO 1.5V P-P?
YES
NO
2
1
CHECK DEVIATION (KHz)/ WATTS METER. REFER TO FIGURE 5-10.
2
CHECK FREQ. (KHz) ERROR METER. REFER TO FIGURE 5-7.
3
CHECK OSCILLOSCOPE. REFER TO FIGURE 5-6.
4
A1A13 250 kHz IF MONITOR AUDIO ckt BD IS BAD.
SET PWR/OFF/ BATT SWITCH TO OFF.
REPLACE A1A13 250 kHz IF MONITOR AUDIO ckt BD.
1
2
MEASURE SIGNAL AT A1A20 J6 WITH SA.
120 MHz –38 dBm TO –45 dBm?
YES
NO
3
MEASURE SIGNAL AT A1A19 J1 WITH SA.
4
SH 2
A1A24A2 120 MHz RECEIVER IS BAD.
SET PWR/OFF/ BATT SWITCH TO OFF.
REPLACE A1A24A2 120 MHz RECEIVER.
SET PWR/OFF/ BATT SWITCH TO PWR.
2

Figure 5-5. Receiver troubleshooting (sheet 1 of 14).

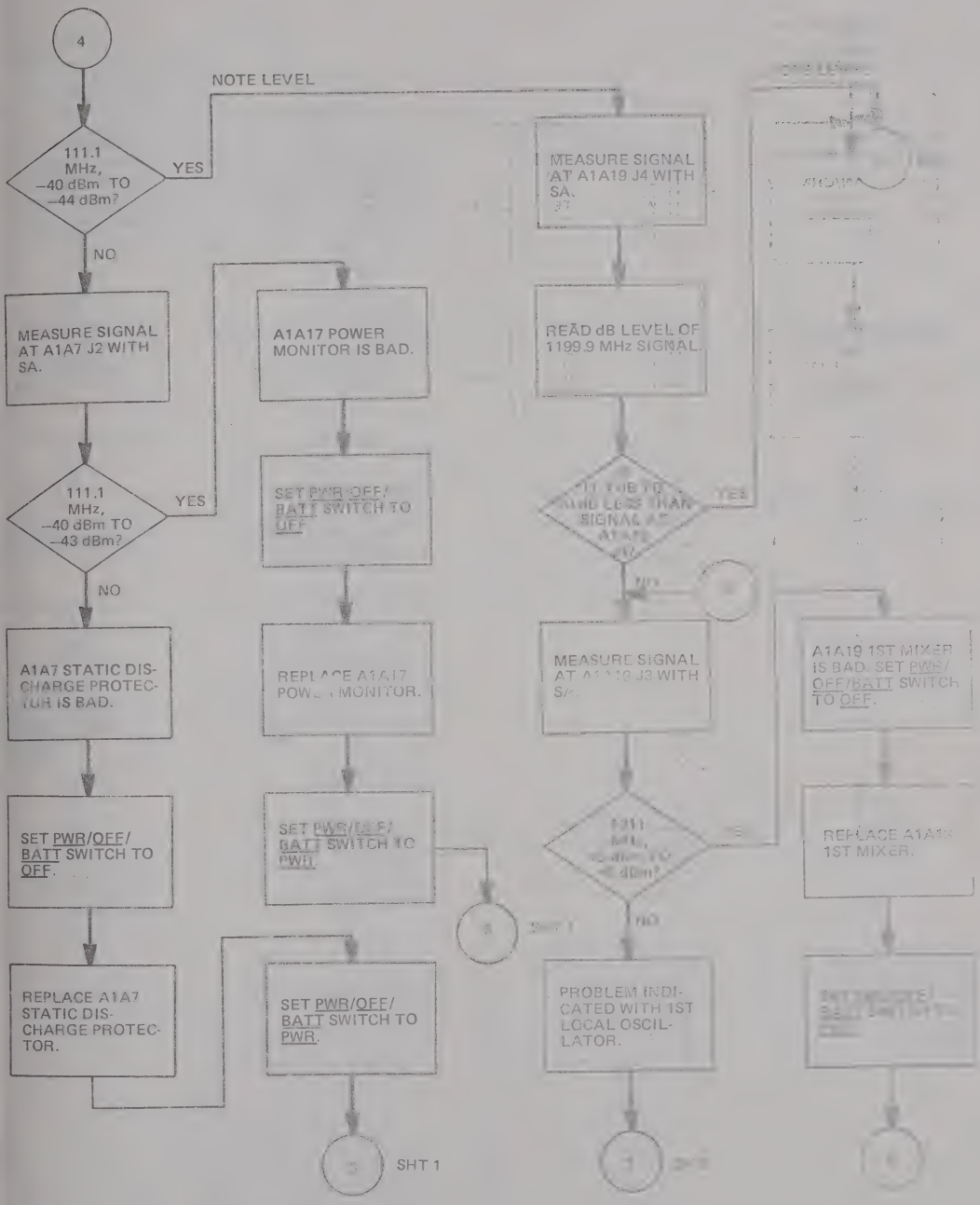
4
NOTE LEVEL
111.1 MHz, –40 dBm TO –44 dBm?
YES
NO
MEASURE SIGNAL AT A1A7 J2 WITH SA.
111.1 MHz, –40 dBm TO –43 dBm?
YES
NO
A1A7 STATIC DISCHARGE PROTECTOR IS BAD.
SET PWR/OFF/BATT SWITCH TO OFF.
REPLACE A1A7 STATIC DISCHARGE PROTECTOR.
A1A17 POWER MONITOR IS BAD.
SET PWR/OFF/BATT SWITCH TO OFF.
REPLACE A1A17 POWER MONITOR.
SET PWR/OFF/BATT SWITCH TO PWR.
SET PWR/OFF/BATT SWITCH TO PWR.
SHT 1
MEASURE SIGNAL AT A1A19 J4 WITH SA.
READ dB LEVEL OF 1199.9 MHz SIGNAL.
YES
MEASURE SIGNAL AT A1A19 J3 WITH SA.
NO
PROBLEM INDICATED WITH 1ST LOCAL OSCILLATOR.
A1A19 1ST MIXER IS BAD. SET PWR/OFF/BATT SWITCH TO OFF.
REPLACE A1A19 1ST MIXER.

Figure 5-5. Receiver troubleshooting (sheet 2 of 11).

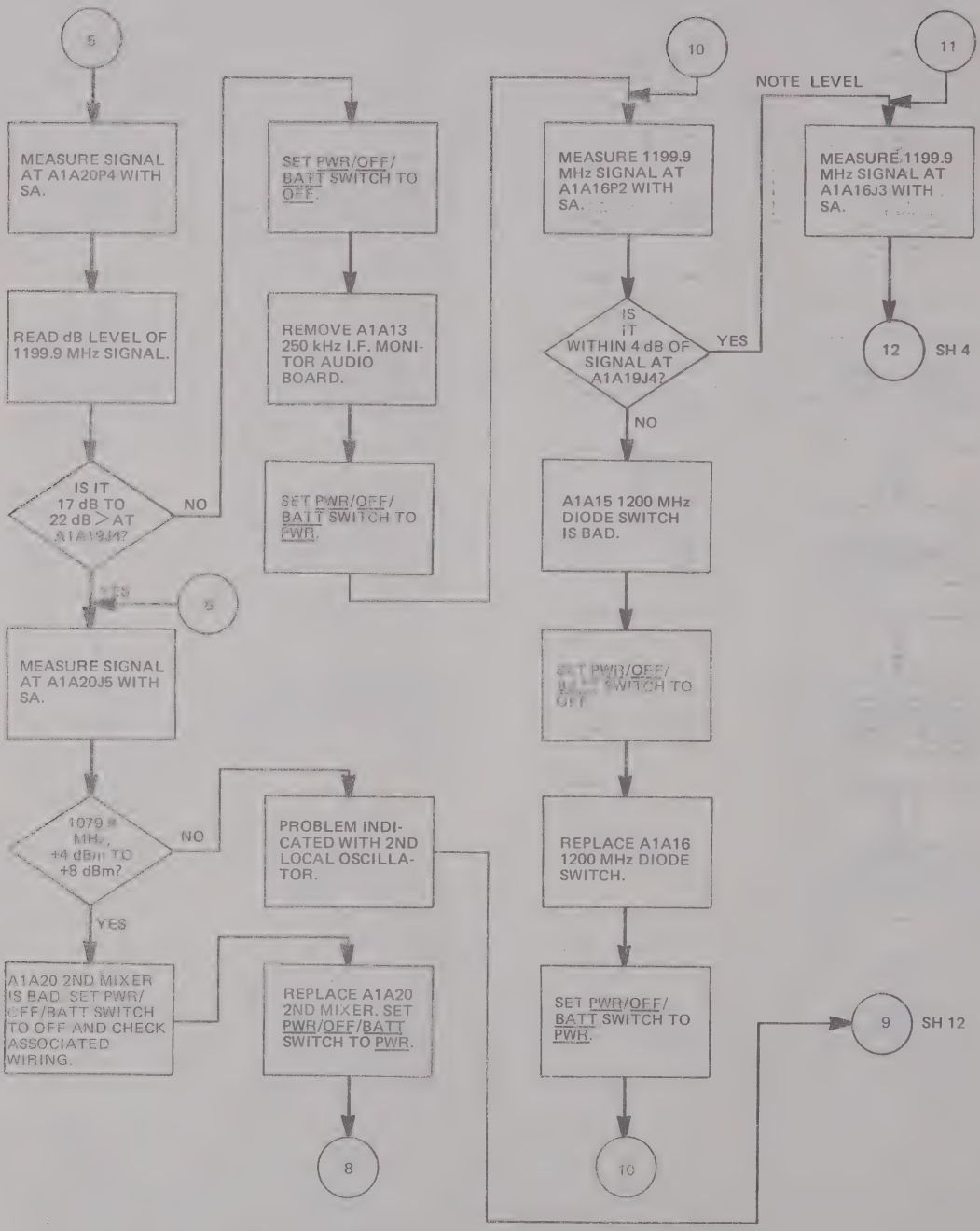
5
MEASURE SIGNAL AT A1A20P4 WITH SA.
READ dB LEVEL OF 1199.9 MHz SIGNAL.
IS IT 17 dB TO 22 dB > AT A1A19J4?
NO
YES
5
MEASURE SIGNAL AT A1A20J5 WITH SA.
1079 ± MHz, +4 dBm TO +8 dBm?
NO
YES
A1A20 2ND MIXER IS BAD. SET PWR/OFF/BATT SWITCH TO OFF AND CHECK ASSOCIATED WIRING.
SET PWR/OFF/BATT SWITCH TO OFF.
REMOVE A1A13 250 kHz I.F. MONITOR AUDIO BOARD.
SET PWR/OFF/BATT SWITCH TO PWR.
PROBLEM INDICATED WITH 2ND LOCAL OSCILLATOR.
REPLACE A1A20 2ND MIXER. SET PWR/OFF/BATT SWITCH TO PWR.
8
10
MEASURE 1199.9 MHz SIGNAL AT A1A16P2 WITH SA.
IS IT WITHIN 4 dB OF SIGNAL AT A1A19J4?
YES
NO
A1A15 1200 MHz DIODE SWITCH IS BAD.
SET PWR/OFF/BATT SWITCH TO OFF
REPLACE A1A16 1200 MHz DIODE SWITCH.
SET PWR/OFF/BATT SWITCH TO PWR.
10
11
NOTE LEVEL
MEASURE 1199.9 MHz SIGNAL AT A1A16J3 WITH SA.
12
SH 4
9
SH 12

Figure 5-5. Receiver troubleshooting (sheet 3 of 14).

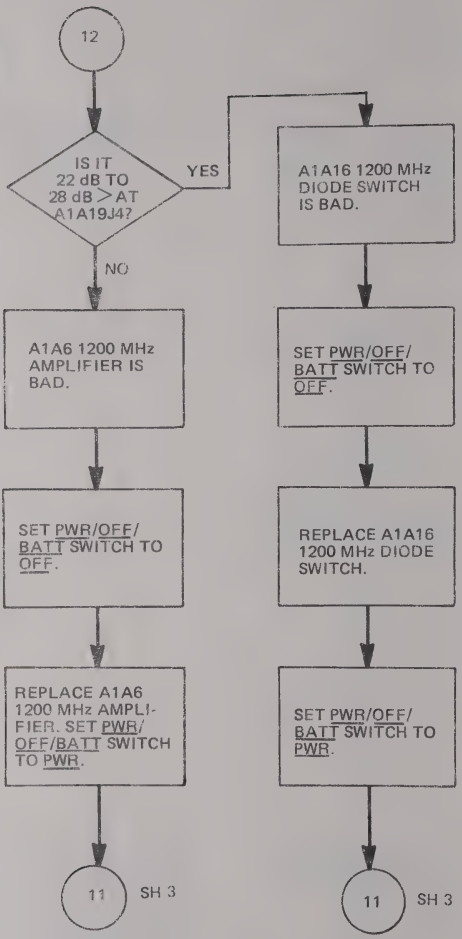
12
IS IT 22 dB TO 28 dB > AT A1A19J4?
YES
NO
A1A16 1200 MHz DIODE SWITCH IS BAD.
A1A6 1200 MHz AMPLIFIER IS BAD.
SET PWR/OFF/BATT SWITCH TO OFF.
SET PWR/OFF/BATT SWITCH TO OFF.
REPLACE A1A16 1200 MHz DIODE SWITCH.
REPLACE A1A6 1200 MHz AMPLIFIER. SET PWR/OFF/BATT SWITCH TO PWR.
SET PWR/OFF/BATT SWITCH TO PWR.
11
SH 3
11
SH 3

Figure 5-5. Receiver troubleshooting (sheet 4 of 14).

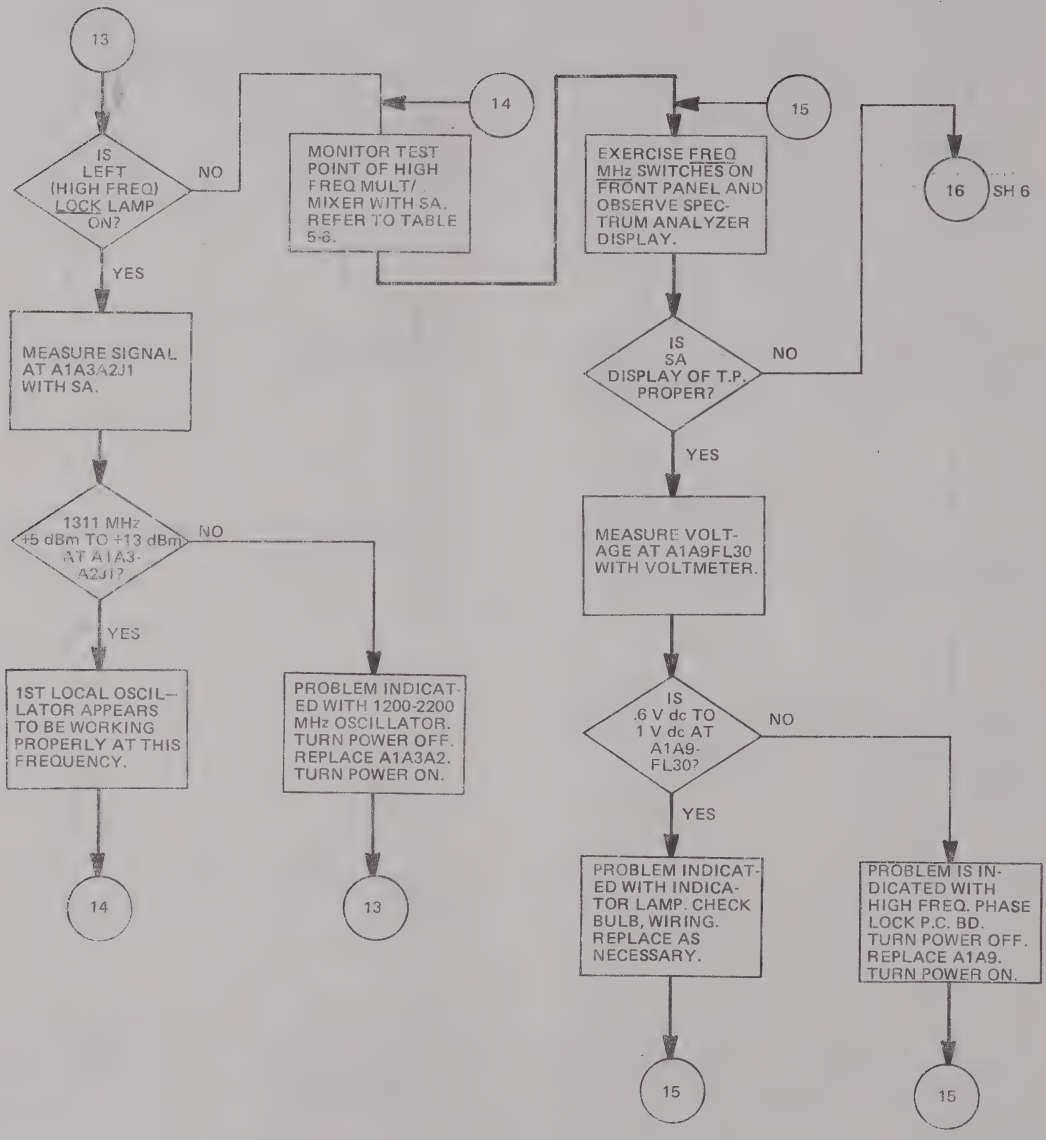
13
IS LEFT (HIGH FREQ) LOCK LAMP ON?
NO
YES
14
MONITOR TEST POINT OF HIGH FREQ MULT/ MIXER WITH SA. REFER TO TABLE 5-6.
MEASURE SIGNAL AT A1A3A2J1 WITH SA.
1311 MHz +5 dBm TO +13 dBm AT A1A3-A2J1?
NO
YES
1ST LOCAL OSCILLATOR APPEARS TO BE WORKING PROPERLY AT THIS FREQUENCY.
PROBLEM INDICATED WITH 1200-2200 MHz OSCILLATOR. TURN POWER OFF. REPLACE A1A3A2. TURN POWER ON.
14
13
15
EXERCISE FREQ MHz SWITCHES ON FRONT PANEL AND OBSERVE SPECTRUM ANALYZER DISPLAY.
IS SA DISPLAY OF T.P. PROPER?
NO
YES
16
SH 6
MEASURE VOLTAGE AT A1A9FL30 WITH VOLTMETER.
IS .6 V dc TO 1 V dc AT A1A9-FL30?
NO
YES
PROBLEM INDICATED WITH INDICATOR LAMP. CHECK BULB, WIRING. REPLACE AS NECESSARY.
PROBLEM IS INDICATED WITH HIGH FREQ. PHASE LOCK P.C. BD. TURN POWER OFF. REPLACE A1A9. TURN POWER ON.
15
15

Figure 5-5. Receiver troubleshooting (sheet 5 of 14).

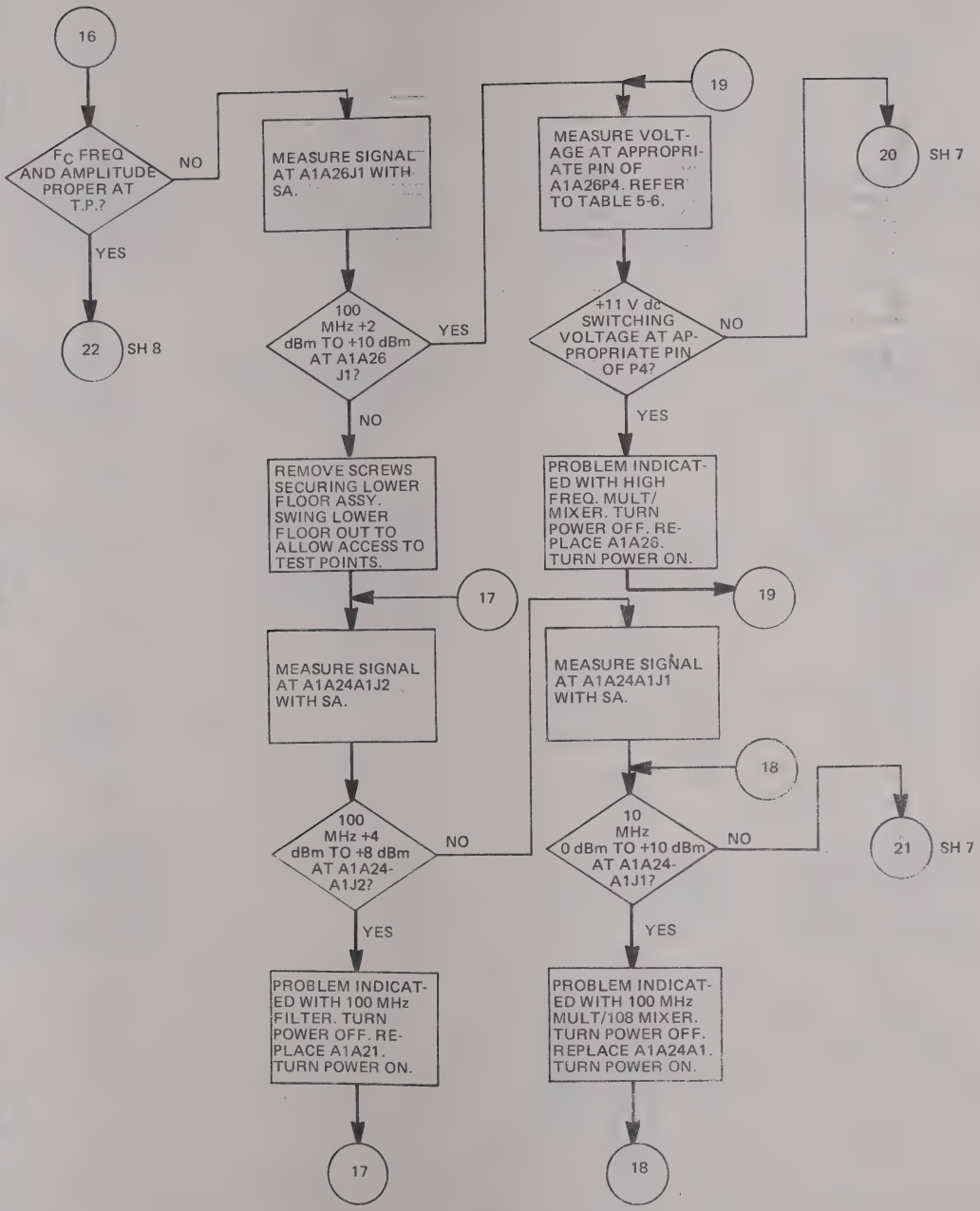
16
F_C FREQ AND AMPLITUDE PROPER AT T.P.?
NO
YES
22
SH 8
MEASURE SIGNAL AT A1A26J1 WITH SA.
100 MHz +2 dBm TO +10 dBm AT A1A26 J1?
YES
NO
REMOVE SCREWS SECURING LOWER FLOOR ASSY. SWING LOWER FLOOR OUT TO ALLOW ACCESS TO TEST POINTS.
17
MEASURE SIGNAL AT A1A24A1J2 WITH SA.
100 MHz +4 dBm TO +8 dBm AT A1A24-A1J2?
NO
YES
PROBLEM INDICATED WITH 100 MHz FILTER. TURN POWER OFF. REPLACE A1A21. TURN POWER ON.
17
19
MEASURE VOLTAGE AT APPROPRIATE PIN OF A1A26P4. REFER TO TABLE 5-6.
+11 V dc SWITCHING VOLTAGE AT APPROPRIATE PIN OF P4?
NO
YES
20
SH 7
PROBLEM INDICATED WITH HIGH FREQ. MULT/ MIXER. TURN POWER OFF. REPLACE A1A26. TURN POWER ON.
19
MEASURE SIGNAL AT A1A24A1J1 WITH SA.
18
10 MHz 0 dBm TO +10 dBm AT A1A24-A1J1?
NO
YES
21
SH 7
PROBLEM INDICATED WITH 100 MHz MULT/108 MIXER. TURN POWER OFF. REPLACE A1A24A1. TURN POWER ON.
18

Figure 5-5. Receiver troubleshooting (sheet 6 of 14).

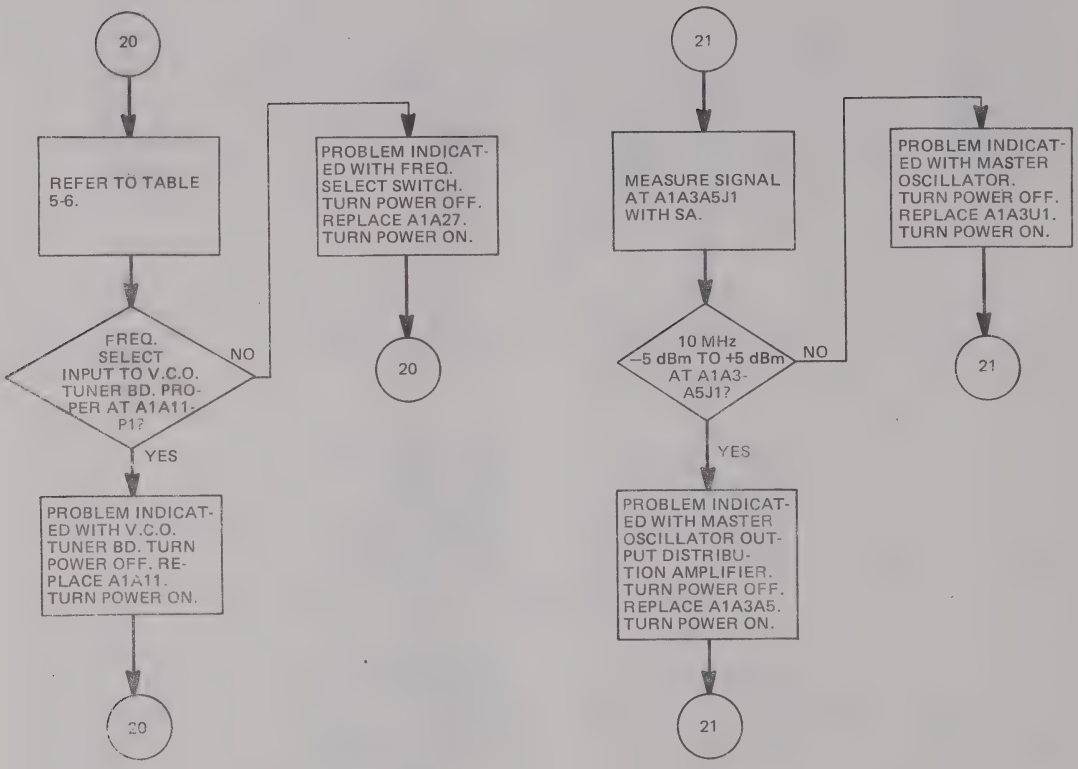
20
REFER TO TABLE 5-6.
FREQ. SELECT INPUT TO V.C.O. TUNER BD. PROPER AT A1A11-P1?
NO
YES
PROBLEM INDICATED WITH FREQ. SELECT SWITCH. TURN POWER OFF. REPLACE A1A27. TURN POWER ON.
20
PROBLEM INDICATED WITH V.C.O. TUNER BD. TURN POWER OFF. REPLACE A1A11. TURN POWER ON.
20
21
MEASURE SIGNAL AT A1A3A5J1 WITH SA.
10 MHz −5 dBm TO +5 dBm AT A1A3-A5J1?
NO
YES
PROBLEM INDICATED WITH MASTER OSCILLATOR. TURN POWER OFF. REPLACE A1A3U1. TURN POWER ON.
21
PROBLEM INDICATED WITH MASTER OSCILLATOR OUTPUT DISTRIBUTION AMPLIFIER. TURN POWER OFF. REPLACE A1A3A5. TURN POWER ON.
21

Figure 5-5. Receiver troubleshooting (sheet 7 of 14).

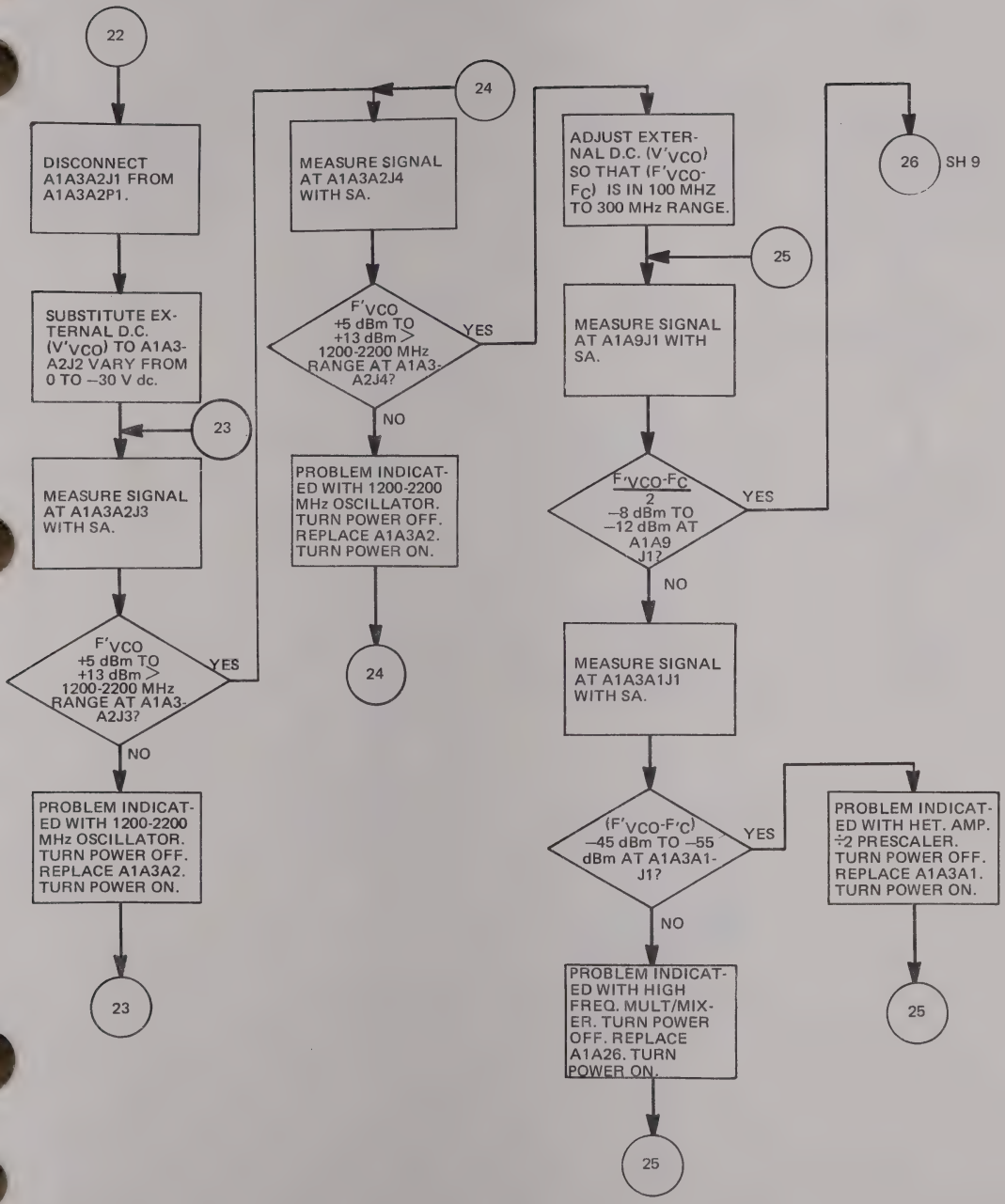
22
DISCONNECT A1A3A2J1 FROM A1A3A2P1.
SUBSTITUTE EXTERNAL D.C. (V'VCO) TO A1A3-A2J2 VARY FROM 0 TO −30 V dc.
23
MEASURE SIGNAL AT A1A3A2J3 WITH SA.
F'VCO +5 dBm TO +13 dBm > 1200-2200 MHz RANGE AT A1A3-A2J3?
YES
NO
PROBLEM INDICATED WITH 1200-2200 MHz OSCILLATOR. TURN POWER OFF. REPLACE A1A3A2. TURN POWER ON.
23
24
MEASURE SIGNAL AT A1A3A2J4 WITH SA.
F'VCO +5 dBm TO +13 dBm > 1200-2200 MHz RANGE AT A1A3-A2J4?
YES
NO
PROBLEM INDICATED WITH 1200-2200 MHz OSCILLATOR. TURN POWER OFF. REPLACE A1A3A2. TURN POWER ON.
24
ADJUST EXTERNAL D.C. (V'VCO) SO THAT (F'VCO-FC) IS IN 100 MHZ TO 300 MHz RANGE.
25
MEASURE SIGNAL AT A1A9J1 WITH SA.
F'VCO-FC / 2 −8 dBm TO −12 dBm AT A1A9 J1?
YES
NO
26 SH 9
MEASURE SIGNAL AT A1A3A1J1 WITH SA.
(F'VCO-F'C) −45 dBm TO −55 dBm AT A1A3A1-J1?
YES
NO
PROBLEM INDICATED WITH HET. AMP. ÷2 PRESCALER. TURN POWER OFF. REPLACE A1A3A1. TURN POWER ON.
25
PROBLEM INDICATED WITH HIGH FREQ. MULT/MIXER. TURN POWER OFF. REPLACE A1A26. TURN POWER ON.
25

Figure 5-5. Receiver troubleshooting (sheet 8 of 14).

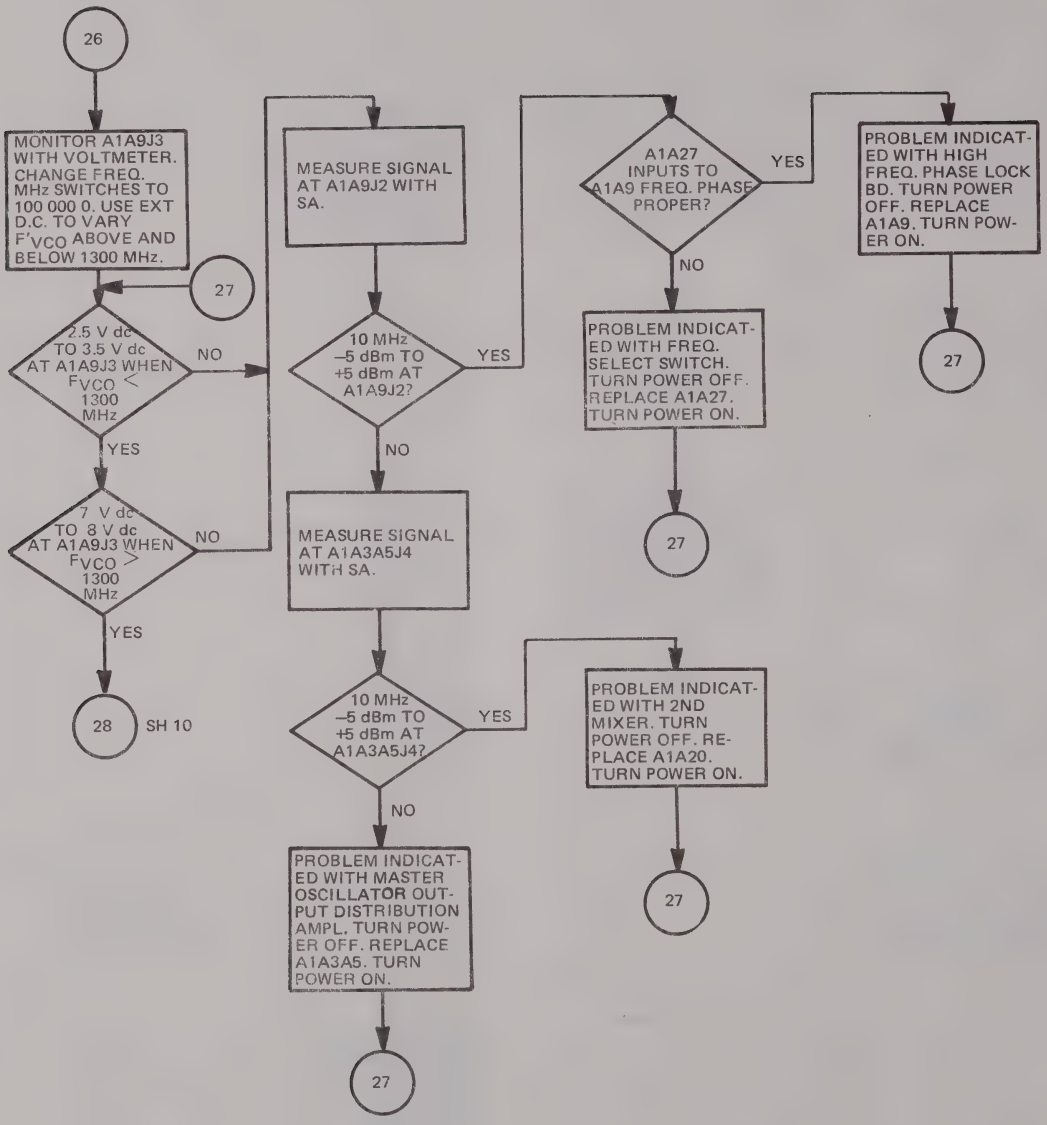
26
MONITOR A1A9J3 WITH VOLTMETER. CHANGE FREQ. MHz SWITCHES TO 100 000 0. USE EXT D.C. TO VARY F'VCO ABOVE AND BELOW 1300 MHz.
27
2.5 V dc TO 3.5 V dc AT A1A9J3 WHEN FVCO < 1300 MHz
NO
YES
7 V dc TO 8 V dc AT A1A9J3 WHEN FVCO > 1300 MHz
NO
YES
28
SH 10
MEASURE SIGNAL AT A1A9J2 WITH SA.
10 MHz –5 dBm TO +5 dBm AT A1A9J2?
YES
NO
MEASURE SIGNAL AT A1A3A5J4 WITH SA.
10 MHz –5 dBm TO +5 dBm AT A1A3A5J4?
YES
NO
PROBLEM INDICATED WITH MASTER OSCILLATOR OUTPUT DISTRIBUTION AMPL. TURN POWER OFF. REPLACE A1A3A5. TURN POWER ON.
27
PROBLEM INDICATED WITH 2ND MIXER. TURN POWER OFF. REPLACE A1A20. TURN POWER ON.
27
A1A27 INPUTS TO A1A9 FREQ. PHASE PROPER?
YES
NO
PROBLEM INDICATED WITH FREQ. SELECT SWITCH. TURN POWER OFF. REPLACE A1A27. TURN POWER ON.
27
PROBLEM INDICATED WITH HIGH FREQ. PHASE LOCK BD. TURN POWER OFF. REPLACE A1A9. TURN POWER ON.
27

Figure 5-5. Receiver troubleshooting (sheet 9 of 14).

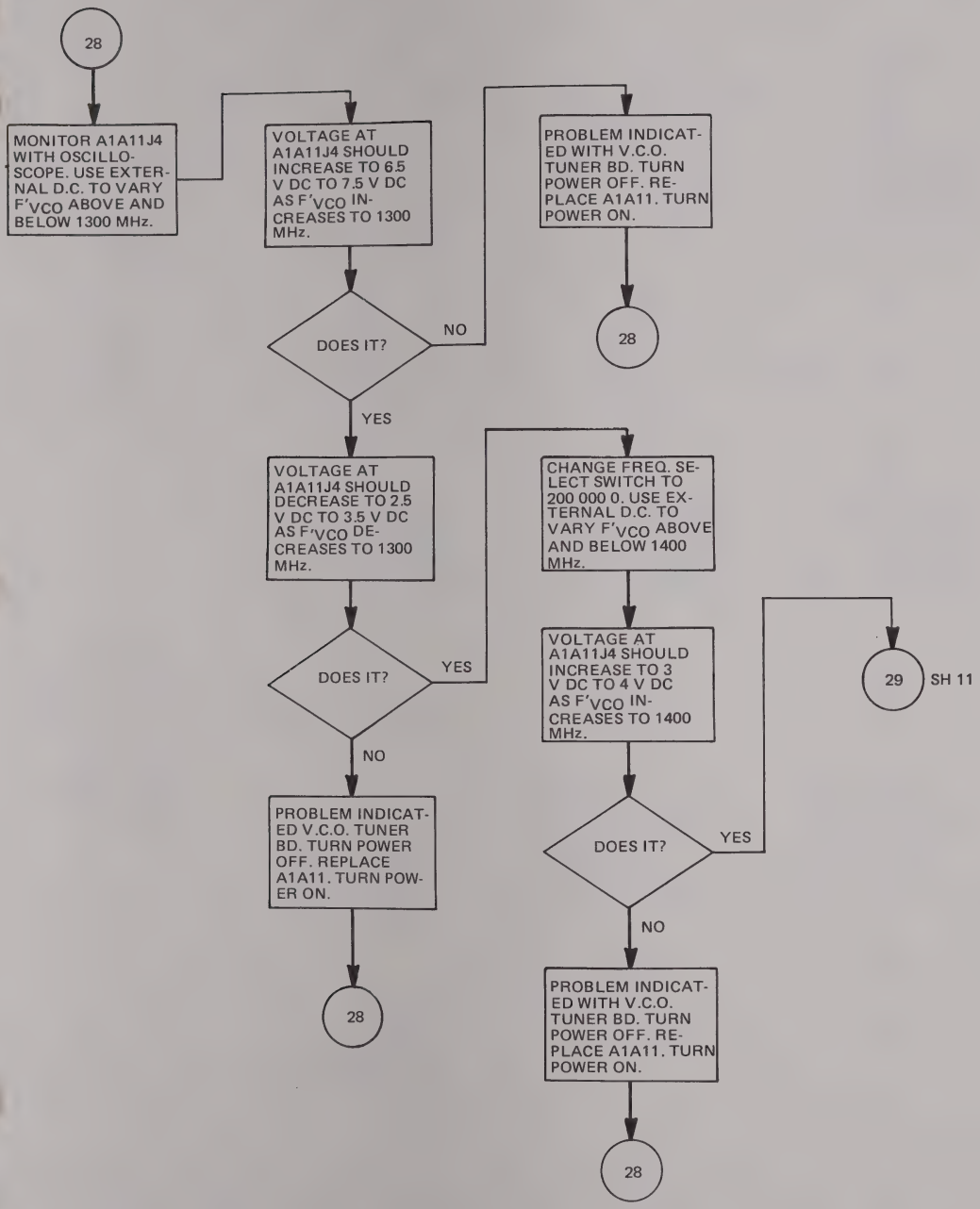
28
MONITOR A1A11J4 WITH OSCILLO-SCOPE. USE EXTER-NAL D.C. TO VARY F'VCO ABOVE AND BELOW 1300 MHz.
VOLTAGE AT A1A11J4 SHOULD INCREASE TO 6.5 V DC TO 7.5 V DC AS F'VCO IN-CREASES TO 1300 MHz.
PROBLEM INDICAT-ED WITH V.C.O. TUNER BD. TURN POWER OFF. RE-PLACE A1A11. TURN POWER ON.
DOES IT?
NO
28
YES
VOLTAGE AT A1A11J4 SHOULD DECREASE TO 2.5 V DC TO 3.5 V DC AS F'VCO DE-CREASES TO 1300 MHz.
CHANGE FREQ. SE-LECT SWITCH TO 200 000 0. USE EX-TERNAL D.C. TO VARY F'VCO ABOVE AND BELOW 1400 MHz.
DOES IT?
YES
NO
VOLTAGE AT A1A11J4 SHOULD INCREASE TO 3 V DC TO 4 V DC AS F'VCO IN-CREASES TO 1400 MHz.
29
SH 11
PROBLEM INDICAT-ED V.C.O. TUNER BD. TURN POWER OFF. REPLACE A1A11. TURN POW-ER ON.
DOES IT?
YES
NO
28
PROBLEM INDICAT-ED WITH V.C.O. TUNER BD. TURN POWER OFF. RE-PLACE A1A11. TURN POWER ON.
28

Figure 5-5. Receiver troubleshooting (sheet 10 of 14).

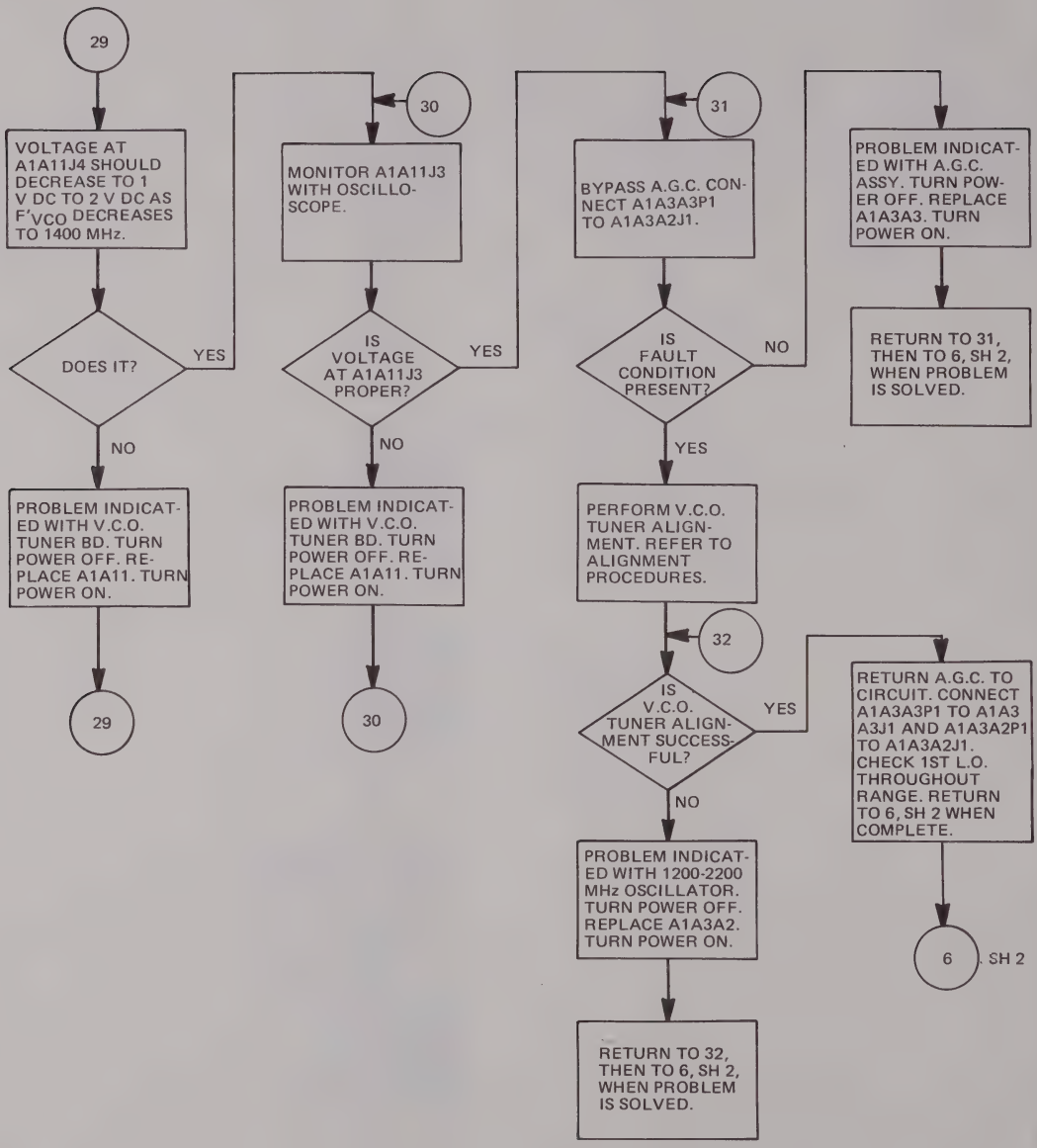
29
VOLTAGE AT A1A11J4 SHOULD DECREASE TO 1 V DC TO 2 V DC AS F'VCO DECREASES TO 1400 MHz.
DOES IT?
YES
NO
PROBLEM INDICATED WITH V.C.O. TUNER BD. TURN POWER OFF. REPLACE A1A11. TURN POWER ON.
29
30
MONITOR A1A11J3 WITH OSCILLOSCOPE.
IS VOLTAGE AT A1A11J3 PROPER?
YES
NO
PROBLEM INDICATED WITH V.C.O. TUNER BD. TURN POWER OFF. REPLACE A1A11. TURN POWER ON.
30
31
BYPASS A.G.C. CONNECT A1A3A3P1 TO A1A3A2J1.
IS FAULT CONDITION PRESENT?
NO
YES
PERFORM V.C.O. TUNER ALIGNMENT. REFER TO ALIGNMENT PROCEDURES.
32
IS V.C.O. TUNER ALIGNMENT SUCCESSFUL?
YES
NO
PROBLEM INDICATED WITH 1200-2200 MHz OSCILLATOR. TURN POWER OFF. REPLACE A1A3A2. TURN POWER ON.
RETURN TO 32, THEN TO 6, SH 2, WHEN PROBLEM IS SOLVED.
PROBLEM INDICATED WITH A.G.C. ASSY. TURN POWER OFF. REPLACE A1A3A3. TURN POWER ON.
RETURN TO 31, THEN TO 6, SH 2, WHEN PROBLEM IS SOLVED.
RETURN A.G.C. TO CIRCUIT. CONNECT A1A3A3P1 TO A1A3A3J1 AND A1A3A2P1 TO A1A3A2J1. CHECK 1ST L.O. THROUGHOUT RANGE. RETURN TO 6, SH 2 WHEN COMPLETE.
6, SH 2

Figure 5-5. Receiver troubleshooting (sheet 11 of 14).

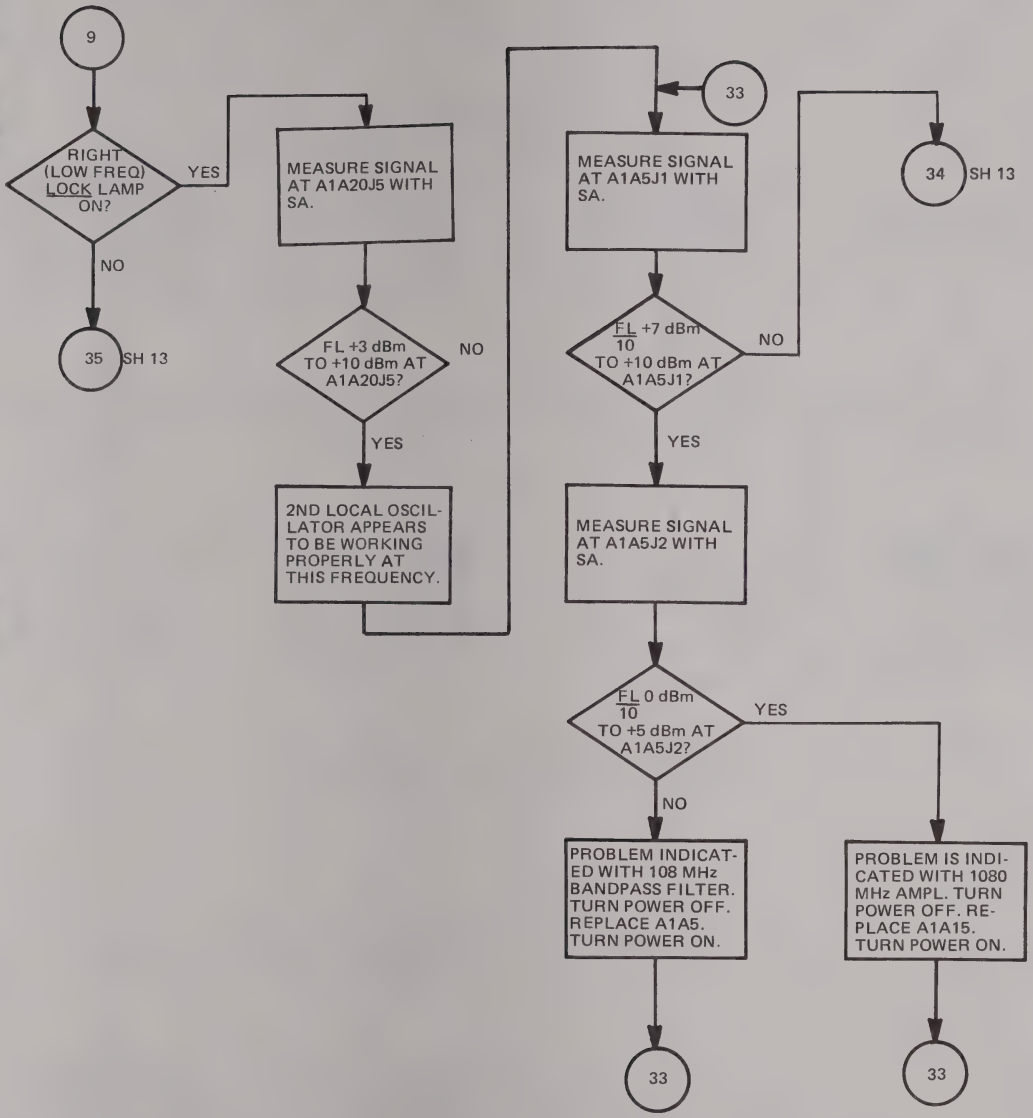
9
RIGHT (LOW FREQ) LOCK LAMP ON?
YES
NO
35 SH 13
MEASURE SIGNAL AT A1A20J5 WITH SA.
FL +3 dBm TO +10 dBm AT A1A20J5?
NO
YES
2ND LOCAL OSCILLATOR APPEARS TO BE WORKING PROPERLY AT THIS FREQUENCY.
33
MEASURE SIGNAL AT A1A5J1 WITH SA.
FL/10 +7 dBm TO +10 dBm AT A1A5J1?
NO
YES
34 SH 13
MEASURE SIGNAL AT A1A5J2 WITH SA.
FL/10 0 dBm TO +5 dBm AT A1A5J2?
YES
NO
PROBLEM INDICATED WITH 108 MHz BANDPASS FILTER. TURN POWER OFF. REPLACE A1A5. TURN POWER ON.
PROBLEM IS INDICATED WITH 1080 MHz AMPL. TURN POWER OFF. REPLACE A1A15. TURN POWER ON.
33
33

Figure 5-5. Receiver troubleshooting (sheet 12 of 14).

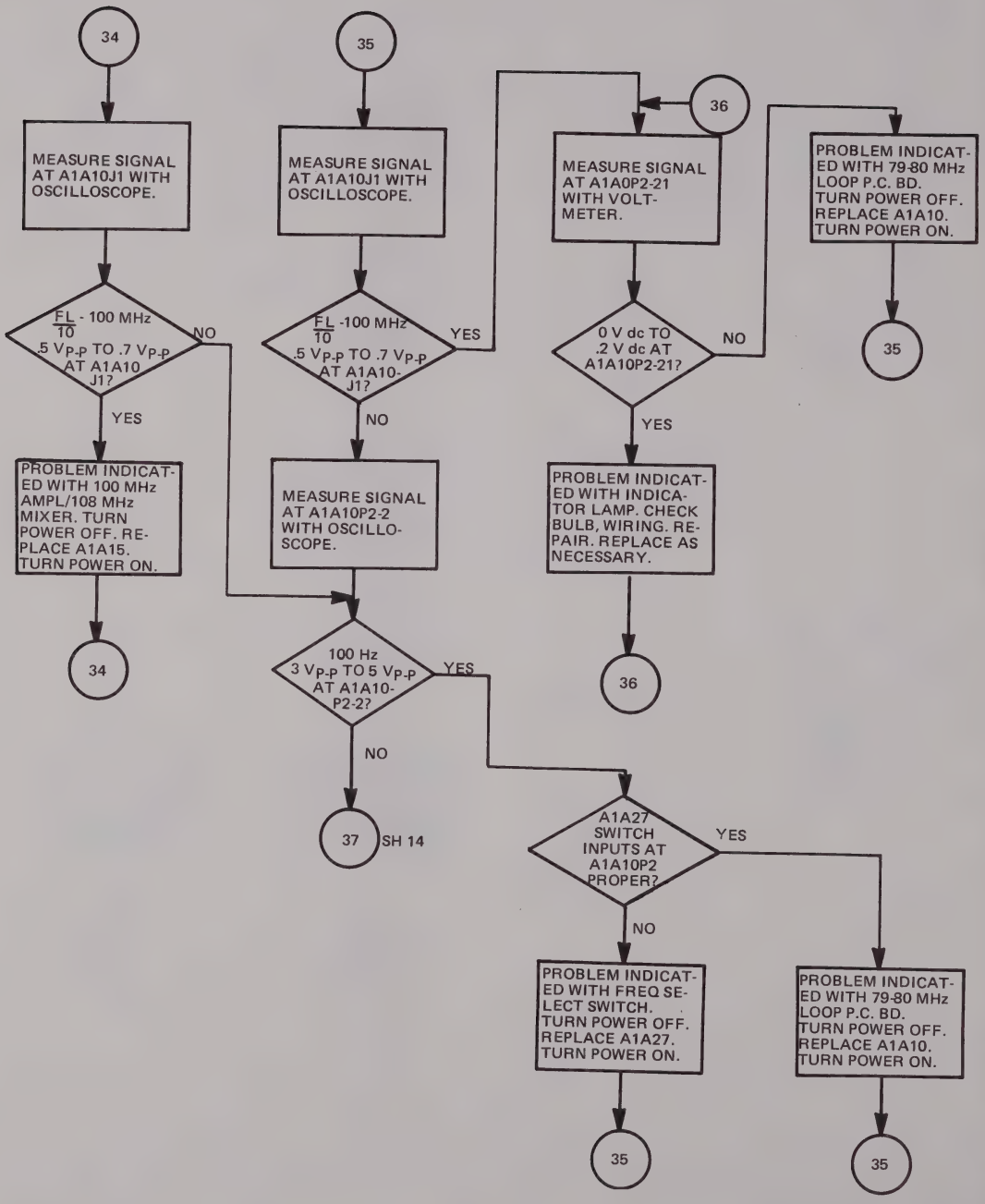
34
MEASURE SIGNAL AT A1A10J1 WITH OSCILLOSCOPE.
FL/10 - 100 MHz .5 VP-P TO .7 VP-P AT A1A10 J1?
NO
YES
PROBLEM INDICATED WITH 100 MHz AMPL/108 MHz MIXER. TURN POWER OFF. REPLACE A1A15. TURN POWER ON.
34
35
MEASURE SIGNAL AT A1A10J1 WITH OSCILLOSCOPE.
FL/10 -100 MHz .5 VP-P TO .7 VP-P AT A1A10-J1?
YES
NO
MEASURE SIGNAL AT A1A10P2-2 WITH OSCILLOSCOPE.
100 Hz 3 VP-P TO 5 VP-P AT A1A10-P2-2?
YES
NO
37 SH 14
36
MEASURE SIGNAL AT A1A0P2-21 WITH VOLTMETER.
0 V dc TO .2 V dc AT A1A10P2-21?
NO
YES
PROBLEM INDICATED WITH INDICATOR LAMP. CHECK BULB, WIRING. REPAIR. REPLACE AS NECESSARY.
36
PROBLEM INDICATED WITH 79-80 MHz LOOP P.C. BD. TURN POWER OFF. REPLACE A1A10. TURN POWER ON.
35
A1A27 SWITCH INPUTS AT A1A10P2 PROPER?
YES
NO
PROBLEM INDICATED WITH FREQ SELECT SWITCH. TURN POWER OFF. REPLACE A1A27. TURN POWER ON.
35
PROBLEM INDICATED WITH 79-80 MHz LOOP P.C. BD. TURN POWER OFF. REPLACE A1A10. TURN POWER ON.
35

Figure 5-5. Receiver troubleshooting (sheet 13 of 14).

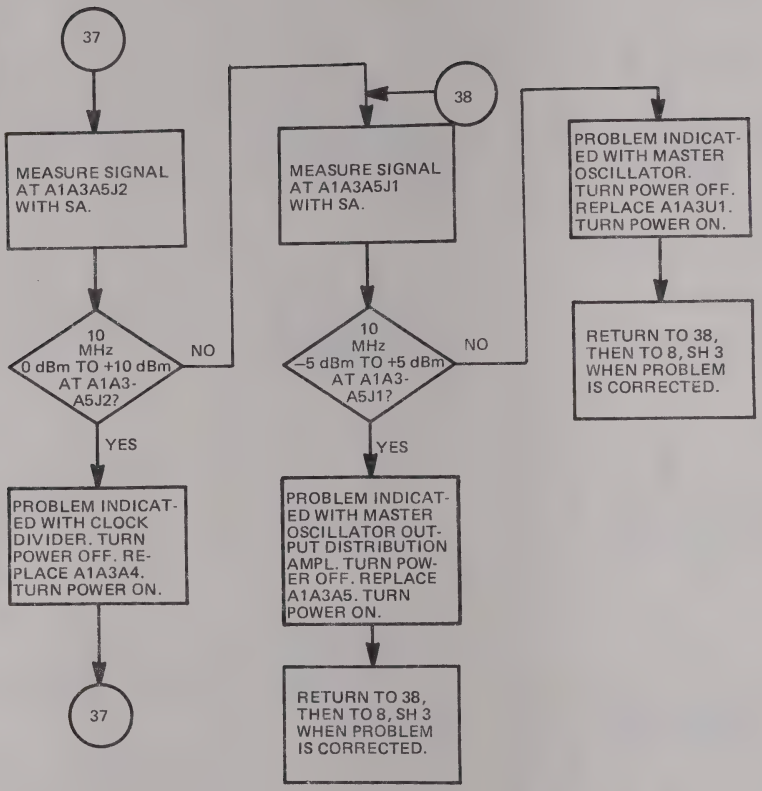
37
MEASURE SIGNAL AT A1A3A5J2 WITH SA.
10 MHz 0 dBm TO +10 dBm AT A1A3-A5J2?
NO
YES
PROBLEM INDICATED WITH CLOCK DIVIDER. TURN POWER OFF. REPLACE A1A3A4. TURN POWER ON.
37
38
MEASURE SIGNAL AT A1A3A5J1 WITH SA.
10 MHz –5 dBm TO +5 dBm AT A1A3-A5J1?
NO
YES
PROBLEM INDICATED WITH MASTER OSCILLATOR OUTPUT DISTRIBUTION AMPL. TURN POWER OFF. REPLACE A1A3A5. TURN POWER ON.
RETURN TO 38, THEN TO 8, SH 3 WHEN PROBLEM IS CORRECTED.
PROBLEM INDICATED WITH MASTER OSCILLATOR. TURN POWER OFF. REPLACE A1A3U1. TURN POWER ON.
RETURN TO 38, THEN TO 8, SH 3 WHEN PROBLEM IS CORRECTED.

Figure 5-5. Receiver troubleshooting (sheet 14 of 14).

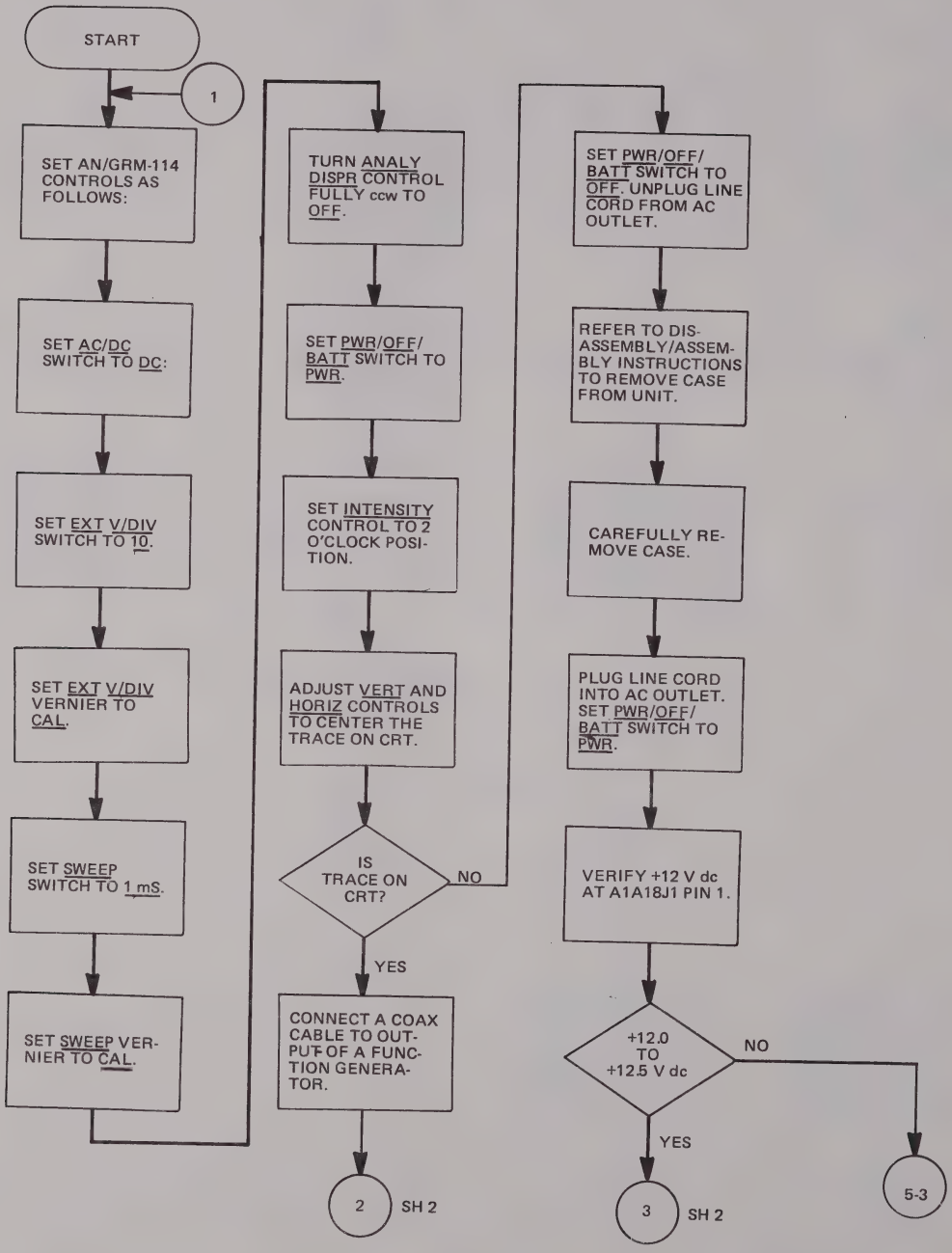
START
1
SET AN/GRM-114 CONTROLS AS FOLLOWS:
SET AC/DC SWITCH TO DC.
SET EXT V/DIV SWITCH TO 10.
SET EXT V/DIV VERNIER TO CAL.
SET SWEEP SWITCH TO 1 mS.
SET SWEEP VERNIER TO CAL.
TURN ANALY DISPR CONTROL FULLY ccw TO OFF.
SET PWR/OFF/BATT SWITCH TO PWR.
SET INTENSITY CONTROL TO 2 O'CLOCK POSITION.
ADJUST VERT AND HORIZ CONTROLS TO CENTER THE TRACE ON CRT.
IS TRACE ON CRT?
NO
YES
CONNECT A COAX CABLE TO OUTPUT OF A FUNCTION GENERATOR.
2
SH 2
SET PWR/OFF/BATT SWITCH TO OFF. UNPLUG LINE CORD FROM AC OUTLET.
REFER TO DISASSEMBLY/ASSEMBLY INSTRUCTIONS TO REMOVE CASE FROM UNIT.
CAREFULLY REMOVE CASE.
PLUG LINE CORD INTO AC OUTLET. SET PWR/OFF/BATT SWITCH TO PWR.
VERIFY +12 V dc AT A1A18J1 PIN 1.
+12.0 TO +12.5 V dc
NO
YES
3
SH 2
5-3

Figure 5-6. Oscilloscope and spectrum analyzer troubleshooting (sheet 1 of 7).

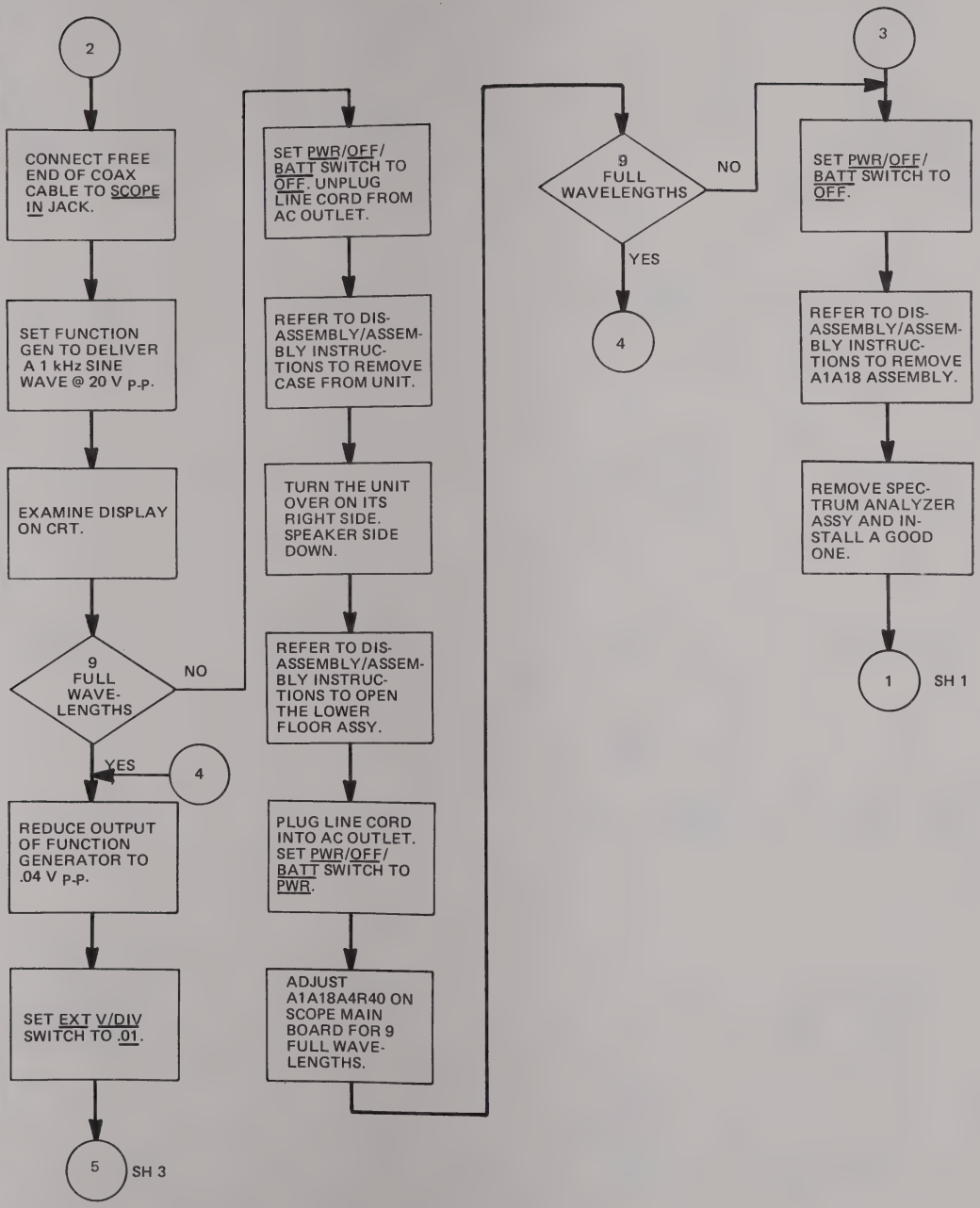
2
CONNECT FREE END OF COAX CABLE TO SCOPE IN JACK.
SET FUNCTION GEN TO DELIVER A 1 kHz SINE WAVE @ 20 V P-P.
EXAMINE DISPLAY ON CRT.
9 FULL WAVE-LENGTHS
NO
YES
4
REDUCE OUTPUT OF FUNCTION GENERATOR TO .04 V P-P.
SET EXT V/DIV SWITCH TO .01.
5
SH 3
SET PWR/OFF/BATT SWITCH TO OFF. UNPLUG LINE CORD FROM AC OUTLET.
REFER TO DIS-ASSEMBLY/ASSEM-BLY INSTRUC-TIONS TO REMOVE CASE FROM UNIT.
TURN THE UNIT OVER ON ITS RIGHT SIDE. SPEAKER SIDE DOWN.
REFER TO DIS-ASSEMBLY/ASSEM-BLY INSTRUC-TIONS TO OPEN THE LOWER FLOOR ASSY.
PLUG LINE CORD INTO AC OUTLET. SET PWR/OFF/BATT SWITCH TO PWR.
ADJUST A1A18A4R40 ON SCOPE MAIN BOARD FOR 9 FULL WAVE-LENGTHS.
9 FULL WAVELENGTHS
NO
YES
4
3
SET PWR/OFF/BATT SWITCH TO OFF.
REFER TO DIS-ASSEMBLY/ASSEM-BLY INSTRUC-TIONS TO REMOVE A1A18 ASSEMBLY.
REMOVE SPEC-TRUM ANALYZER ASSY AND IN-STALL A GOOD ONE.
1
SH 1

Figure 5-6. Oscilloscope and spectrum analyzer troubleshooting (sheet 2 of 7).

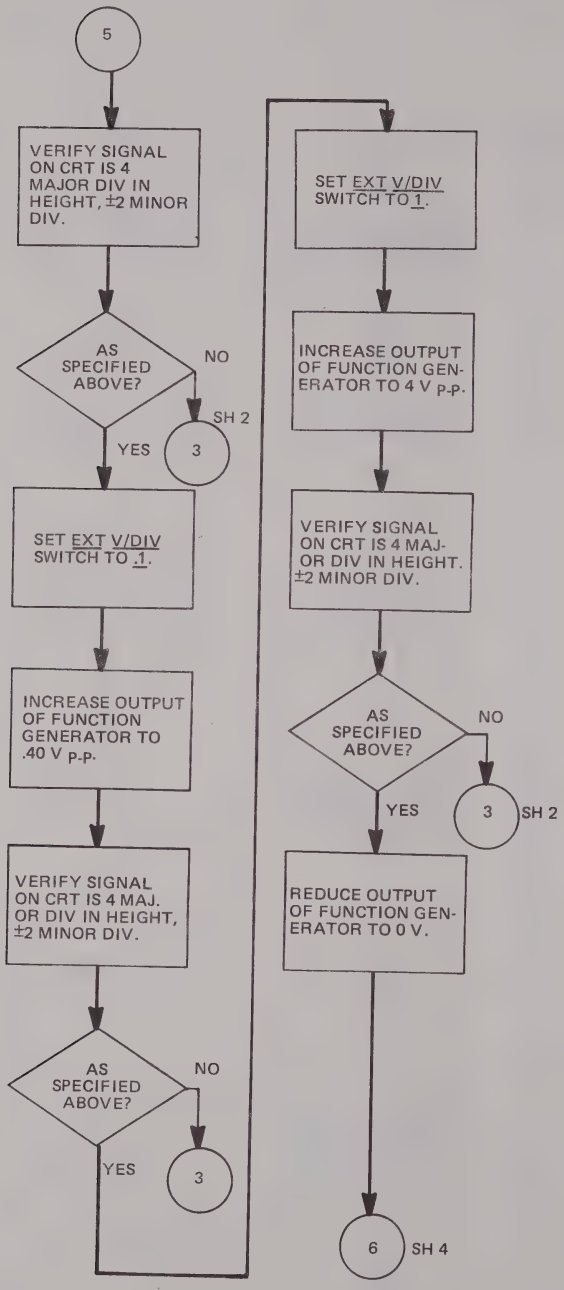
5
VERIFY SIGNAL ON CRT IS 4 MAJOR DIV IN HEIGHT, ±2 MINOR DIV.
AS SPECIFIED ABOVE?
NO
YES
3
SH 2
SET EXT V/DIV SWITCH TO .1.
INCREASE OUTPUT OF FUNCTION GENERATOR TO .40 V P-P.
VERIFY SIGNAL ON CRT IS 4 MAJ. OR DIV IN HEIGHT, ±2 MINOR DIV.
AS SPECIFIED ABOVE?
NO
YES
3
SET EXT V/DIV SWITCH TO 1.
INCREASE OUTPUT OF FUNCTION GENERATOR TO 4 V P-P.
VERIFY SIGNAL ON CRT IS 4 MAJ-OR DIV IN HEIGHT. ±2 MINOR DIV.
AS SPECIFIED ABOVE?
NO
YES
3
SH 2
REDUCE OUTPUT OF FUNCTION GEN-ERATOR TO 0 V.
6
SH 4

Figure 5-6. Oscilloscope and spectrum analyzer troubleshooting (sheet 3 of 7).

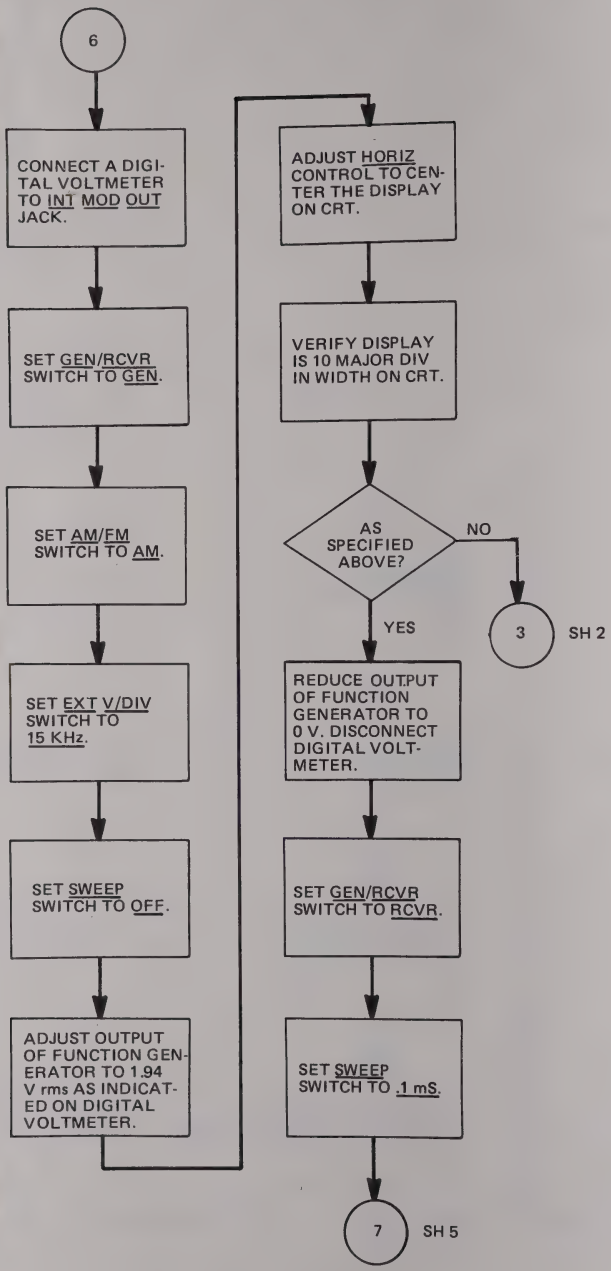
6
CONNECT A DIGITAL VOLTMETER TO INT MOD OUT JACK.
SET GEN/RCVR SWITCH TO GEN.
SET AM/FM SWITCH TO AM.
SET EXT V/DIV SWITCH TO 15 KHz.
SET SWEEP SWITCH TO OFF.
ADJUST OUTPUT OF FUNCTION GENERATOR TO 1.94 V rms AS INDICATED ON DIGITAL VOLTMETER.
ADJUST HORIZ CONTROL TO CENTER THE DISPLAY ON CRT.
VERIFY DISPLAY IS 10 MAJOR DIV IN WIDTH ON CRT.
AS SPECIFIED ABOVE?
NO
YES
3
SH 2
REDUCE OUTPUT OF FUNCTION GENERATOR TO 0 V. DISCONNECT DIGITAL VOLTMETER.
SET GEN/RCVR SWITCH TO RCVR.
SET SWEEP SWITCH TO .1 mS.
7
SH 5

Figure 5-6. Oscilloscope and spectrum analyzer troubleshooting (sheet 4 of 7).

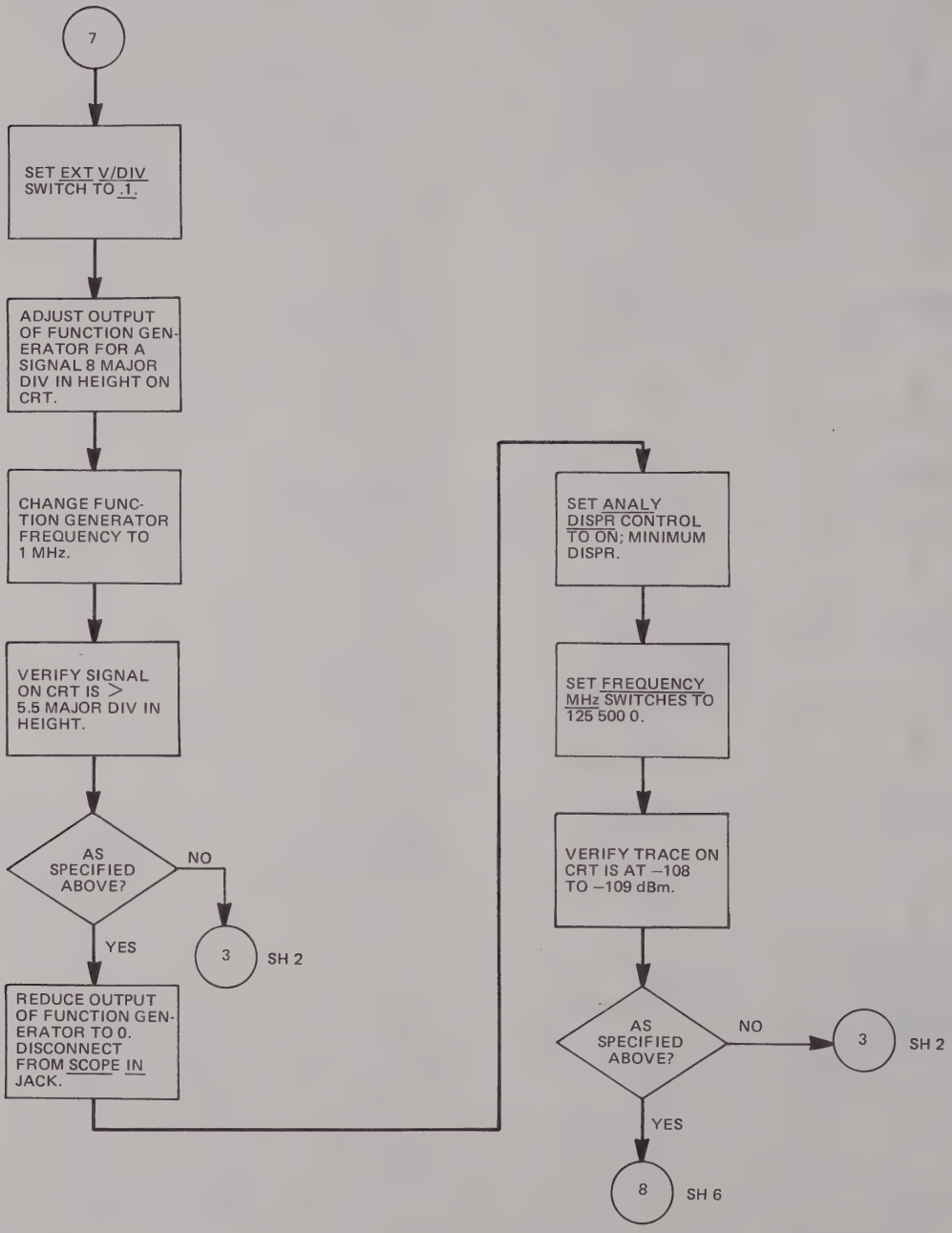
7
SET EXT V/DIV SWITCH TO .1.
ADJUST OUTPUT OF FUNCTION GENERATOR FOR A SIGNAL 8 MAJOR DIV IN HEIGHT ON CRT.
CHANGE FUNCTION GENERATOR FREQUENCY TO 1 MHz.
VERIFY SIGNAL ON CRT IS > 5.5 MAJOR DIV IN HEIGHT.
AS SPECIFIED ABOVE?
NO
YES
3
SH 2
REDUCE OUTPUT OF FUNCTION GENERATOR TO 0. DISCONNECT FROM SCOPE IN JACK.
SET ANALY DISPR CONTROL TO ON; MINIMUM DISPR.
SET FREQUENCY MHz SWITCHES TO 125 500 0.
VERIFY TRACE ON CRT IS AT −108 TO −109 dBm.
AS SPECIFIED ABOVE?
NO
3
SH 2
YES
8
SH 6

Figure 5-6. Oscilloscope and spectrum analyzer troubleshooting (sheet 5 of 7).

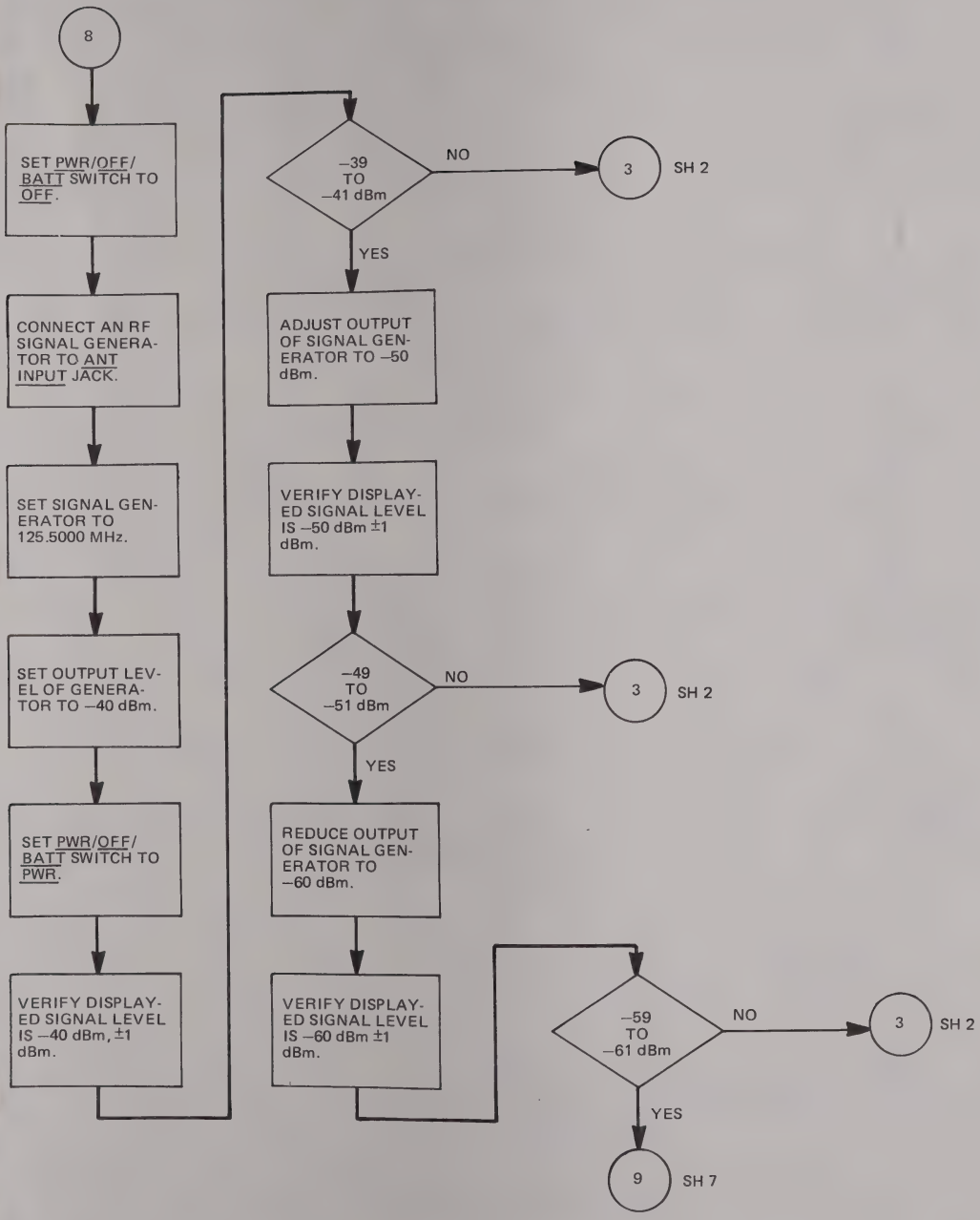

Figure 5-6. Oscilloscope and spectrum analyzer troubleshooting (sheet 6 of 7).

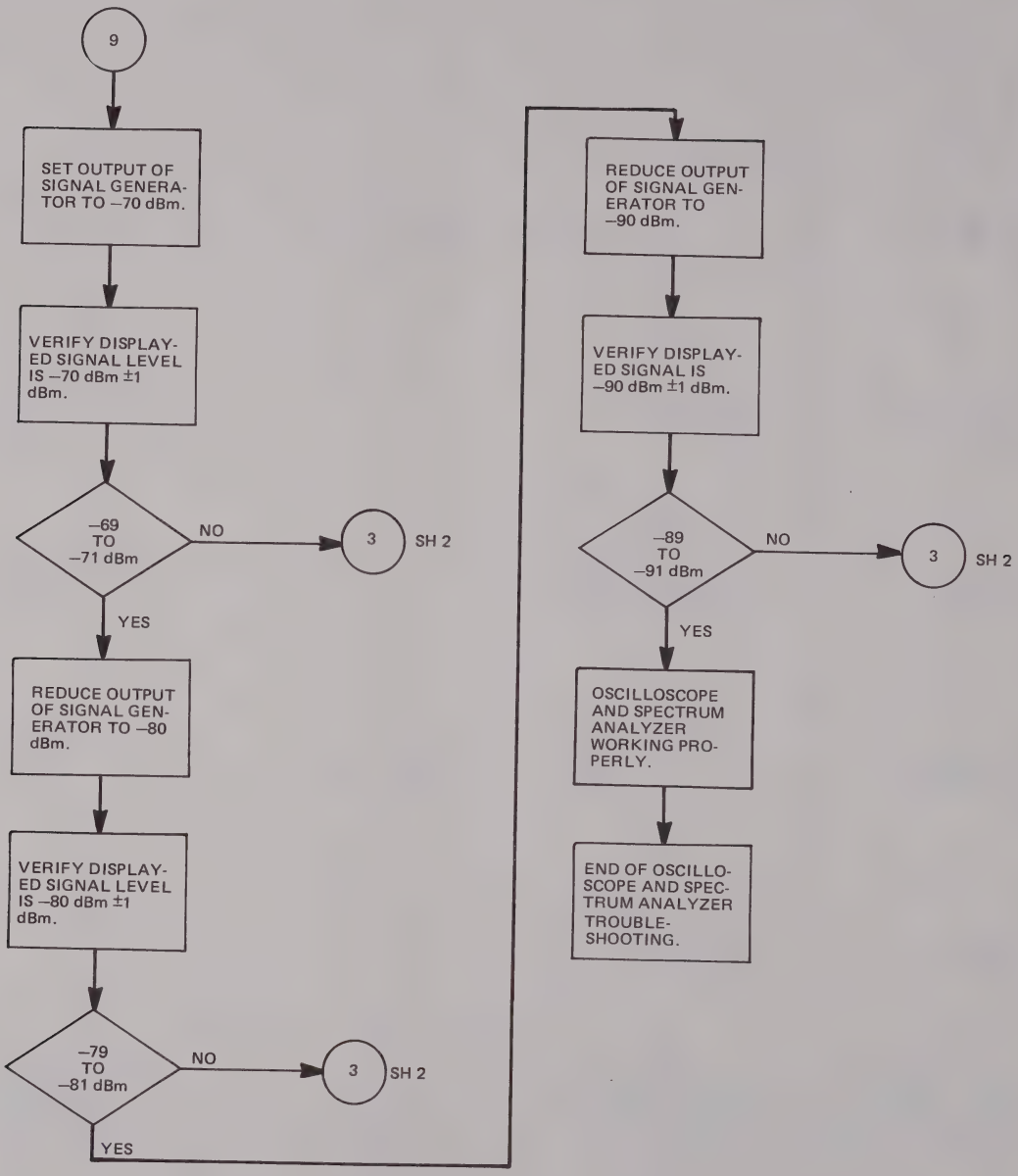

Figure 5-6. Oscilloscope and spectrum analyzer troubleshooting (sheet 7 of 7).

Table 5-7. Frequency Error Measurement - Initial Conditions.

Step	AN/GRM-114 setting
1.	GEN/RCVR switch to RCVR
2.	EXT V/DIV switch to .1
3.	EXT V/DIV vernier to CAL
4.	AC/DC switch to DC
5.	SWEEP switch to 1 mS
6.	SWEEP vernier to CAL
7.	1.5/5/15 KHz switch to 1.5
8.	AM/FM switch to FM
9.	FREQUENCY MHz switches to 000 000 0
10.	INT MOD/RCVR switch to RCVR
11.	SQUELCH control fully ccw to OFF
12.	RCVR WIDE/MID/NARROW switch to NARROW
13.	AUTO/ZERO, BATT switch to NARROW
14.	PWR/OFF/BATT switch to OFF
15.	Unplug line cord from AC outlet.

Table 5-8. 1st and 2nd Local Oscillators (Sheet 1 of 3).

Reading	Meaning
F_L	Frequency of 2ND local oscillator, determined by value of four rightmost thumbwheels of FREQUENCY MHz subtracted from 1080.0000 MHz. 1080.0000 - XXXX=F_L.
$F_L/10$	Frequency delivered to 1080 MHz Multiplier/Mixer.
(F_L/10) - 100 MHz	Frequency produced within 79-80 MHz Loop Circuit Board, delivered to 100 MHz Multiplier/108 MHz Mixer.
COMB FREQUENCY (F_C)	LEFTMOST DIGIT OF FREQUENCY MHz THUMBWHEELS / F_C 0 or 1 — 1100 MHz 2 or 3 — 1300 MHz 4 or 5 — 1500 MHz 6 or 7 — 1700 MHz 8 or 9 — 1900 MHz
F_{VCO}	Frequency generated by 1200-2200 MHz Oscillator. It equals 1200 MHz plus the value of the three leftmost digits of the FREQUENCY MHz thumbwheels (in MHz).
F'_{VCO}	Frequency generated by 1200-2200 MHz Oscillator as a result of an external voltage control.

Table 5-8. 1st and 2nd Local Oscillators (Sheet 2 of 3).

Reading	Meaning
V_{VCO}	DC voltage sent to 1200-2200 MHz Oscillator from the tuning integrator in the V.C.O. Tuner Circuit Board. This voltage controls the frequency of the 1200-2200 MHz Oscillator.
V'_{VCO}	DC voltages sent to the 1200-2200 MHz Oscillator by an external dc source.
F_{VCO}-F_C	Frequency delivered to Heterodyne Amplifier ÷2 Prescaler from the High Frequency Multiplier/Mixer.
F_{VCO}-F_C	Frequency sent to the High Frequency Phase Lock Circuit Board from the Heterodyne Amplifier ÷2 Prescaler.
Spectrum Analyzer Display of High Frequency Multiplier/Mixer Test Point	Refer to the table of F_C values. For the selected frequency the required power level is —18 dBm to —25 dBm. The unselected frequencies must have power level at least 25 dBm below that of the selected frequency. NOTE The test point is located in the center of the left-hand enclosure end cover of the High Frequency Multiplier Mixer A1A26 (as viewed from the front panel). Insert the High Frequency Multiplier Mixer sniffer (refer to Table 5-1) into the indentation.
SWITCHING VOLTAGES FOR F_C	V.C.O. Tuner Circuit Board A1A11P-1 INPUTS / A1A26P-4 OUTPUT

F_C	Pin 2	Pin 2	Pin 3	+11V at Pin No.	+11V at Pin No. (High Freq. Mult./Mixer)
1100 MHz	0V	0V	0V	10	1
1300 MHz	0V	0V	+5V	11	2
1500 MHz	0V	+5V	0V	12	3
1100 MHz	0V	+5V	+5V	13	4
1900 MHz	+5V	0V	0V	14	5

Table 5-8. 1st and 2nd Local Oscillators (Sheet 3 of 3).

Reading	Meaning
RELATIONSHIP BETWEEN V_{VCO} AND F_{VCO}	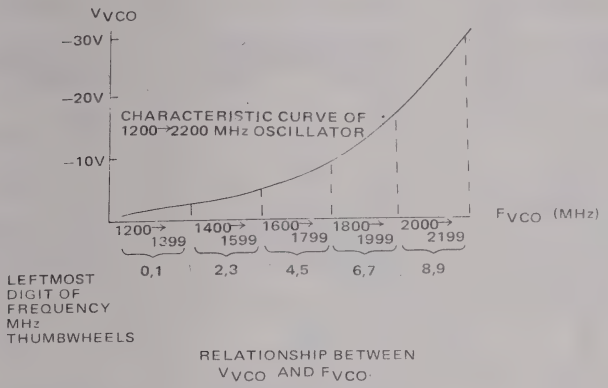

RELATIONSHIP BETWEEN V_{VCO} AND F_{VCO}

Operating open-loop, as in troubleshooting, the voltage V_{VCO} will be one of two possible values for each range. If F'_{VCO} is below F_{VCO}, V_{VCO} will go to the largest negative value of the range in an effort to raise F_{VCO}. If F'_{VCO} is above F_{VCO}, V_{VCO} will go to the smallest (negative) value for the range.

When the High Frequency Phase-Lock Loop is operating closed loop, as in normal operation, the value of V_{VCO} will correspond to a particular frequency based on the characteristic curve of the 1200-2200 MHz Oscillator. When V_{VCO} is monitored (using a "tee" connector), while the leftmost digit of the FREQUENCY MHz thumbwheels is changed, in order through all possible settings, V_{VCO} should smoothly and continuously increase, in negative voltage, as F_{VCO} increases.

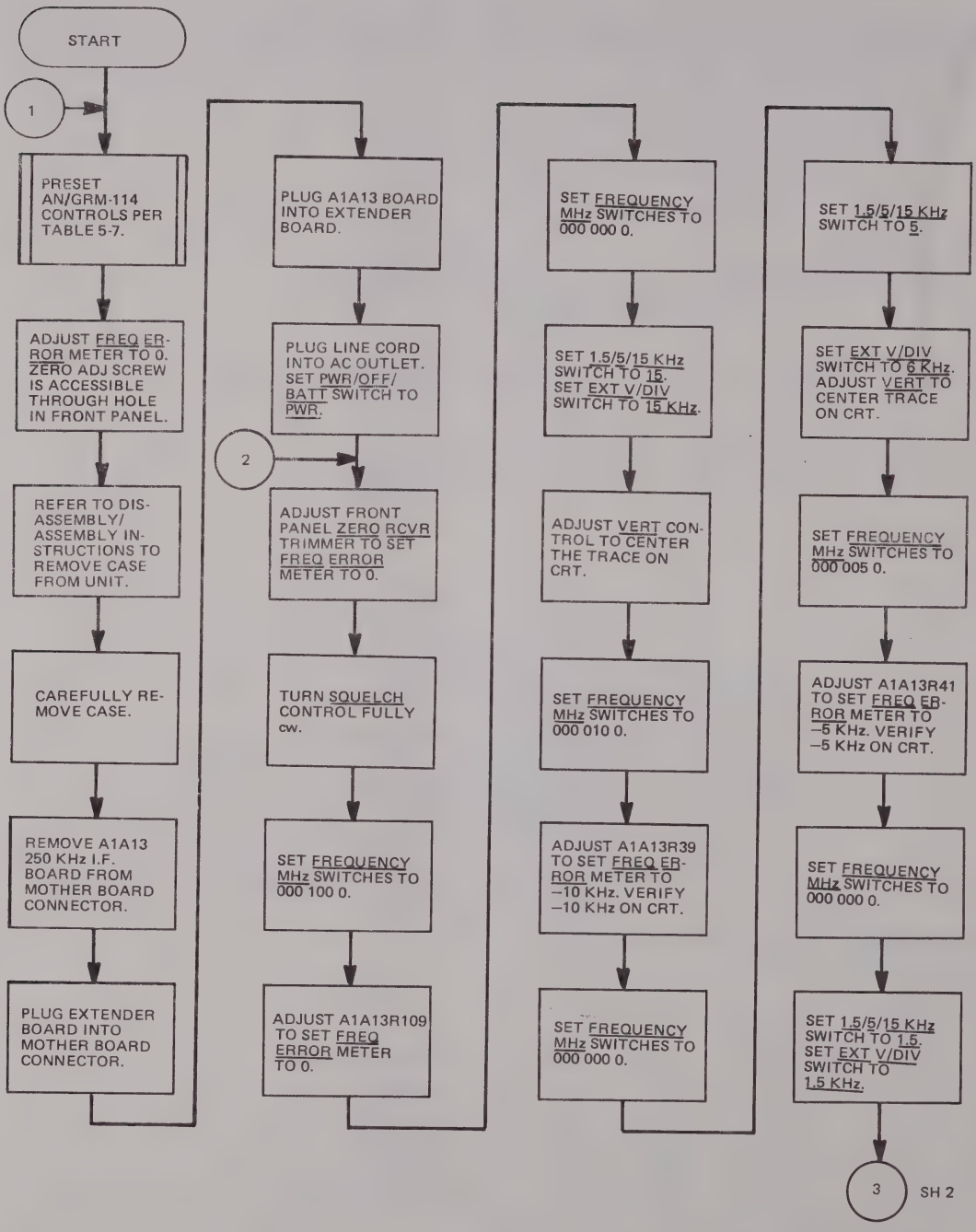
START
1
PRESET AN/GRM-114 CONTROLS PER TABLE 5-7.
ADJUST FREQ ERROR METER TO 0. ZERO ADJ SCREW IS ACCESSIBLE THROUGH HOLE IN FRONT PANEL.
REFER TO DISASSEMBLY/ ASSEMBLY INSTRUCTIONS TO REMOVE CASE FROM UNIT.
CAREFULLY REMOVE CASE.
REMOVE A1A13 250 KHz I.F. BOARD FROM MOTHER BOARD CONNECTOR.
PLUG EXTENDER BOARD INTO MOTHER BOARD CONNECTOR.
PLUG A1A13 BOARD INTO EXTENDER BOARD.
PLUG LINE CORD INTO AC OUTLET. SET PWR/OFF/ BATT SWITCH TO PWR.
2
ADJUST FRONT PANEL ZERO RCVR TRIMMER TO SET FREQ ERROR METER TO 0.
TURN SQUELCH CONTROL FULLY cw.
SET FREQUENCY MHz SWITCHES TO 000 100 0.
ADJUST A1A13R109 TO SET FREQ ERROR METER TO 0.
SET FREQUENCY MHz SWITCHES TO 000 000 0.
SET 1.5/5/15 KHz SWITCH TO 15. SET EXT V/DIV SWITCH TO 15 KHz.
ADJUST VERT CONTROL TO CENTER THE TRACE ON CRT.
SET FREQUENCY MHz SWITCHES TO 000 010 0.
ADJUST A1A13R39 TO SET FREQ ERROR METER TO −10 KHz. VERIFY −10 KHz ON CRT.
SET FREQUENCY MHz SWITCHES TO 000 000 0.
SET 1.5/5/15 KHz SWITCH TO 5.
SET EXT V/DIV SWITCH TO 5 KHz. ADJUST VERT TO CENTER TRACE ON CRT.
SET FREQUENCY MHz SWITCHES TO 000 005 0.
ADJUST A1A13R41 TO SET FREQ ERROR METER TO −5 KHz. VERIFY −5 KHz ON CRT.
SET FREQUENCY MHz SWITCHES TO 000 000 0.
SET 1.5/5/15 KHz SWITCH TO 1.5. SET EXT V/DIV SWITCH TO 1.5 KHz.
3
SH 2

Figure 5-7. Frequency error measurement troubleshooting (sheet 1 of 3).

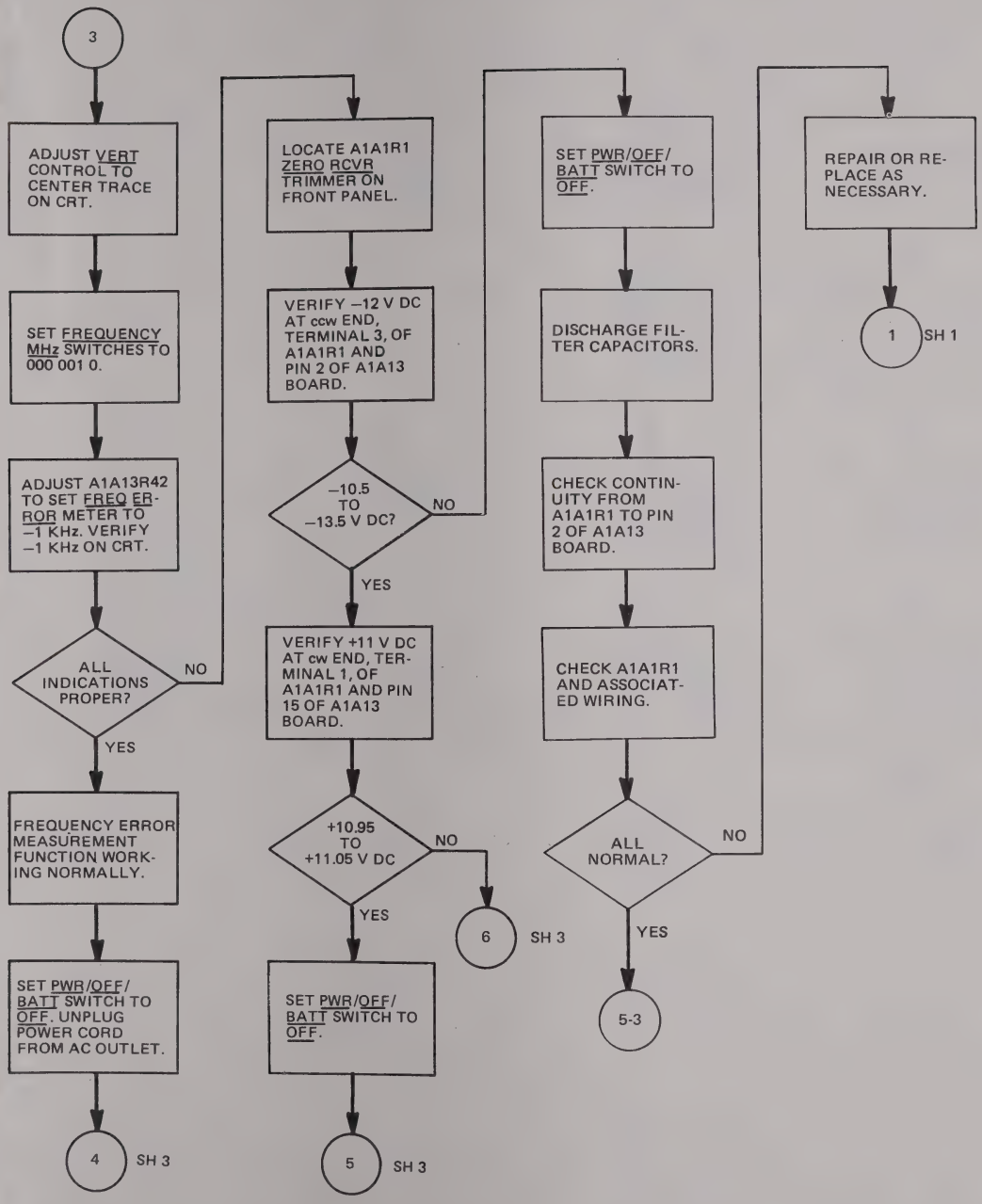
3
ADJUST VERT CONTROL TO CENTER TRACE ON CRT.
SET FREQUENCY MHz SWITCHES TO 000 001 0.
ADJUST A1A13R42 TO SET FREQ ERROR METER TO −1 KHz. VERIFY −1 KHz ON CRT.
ALL INDICATIONS PROPER?
NO
YES
FREQUENCY ERROR MEASUREMENT FUNCTION WORKING NORMALLY.
SET PWR/OFF/BATT SWITCH TO OFF. UNPLUG POWER CORD FROM AC OUTLET.
4
SH 3
LOCATE A1A1R1 ZERO RCVR TRIMMER ON FRONT PANEL.
VERIFY −12 V DC AT ccw END, TERMINAL 3, OF A1A1R1 AND PIN 2 OF A1A13 BOARD.
−10.5 TO −13.5 V DC?
NO
YES
VERIFY +11 V DC AT cw END, TERMINAL 1, OF A1A1R1 AND PIN 15 OF A1A13 BOARD.
+10.95 TO +11.05 V DC
NO
YES
6
SH 3
SET PWR/OFF/BATT SWITCH TO OFF.
5
SH 3
SET PWR/OFF/BATT SWITCH TO OFF.
DISCHARGE FILTER CAPACITORS.
CHECK CONTINUITY FROM A1A1R1 TO PIN 2 OF A1A13 BOARD.
CHECK A1A1R1 AND ASSOCIATED WIRING.
ALL NORMAL?
NO
YES
5-3
REPAIR OR REPLACE AS NECESSARY.
1
SH 1

Figure 5-7. Frequency error measurement troubleshooting (sheet 2 of 3).

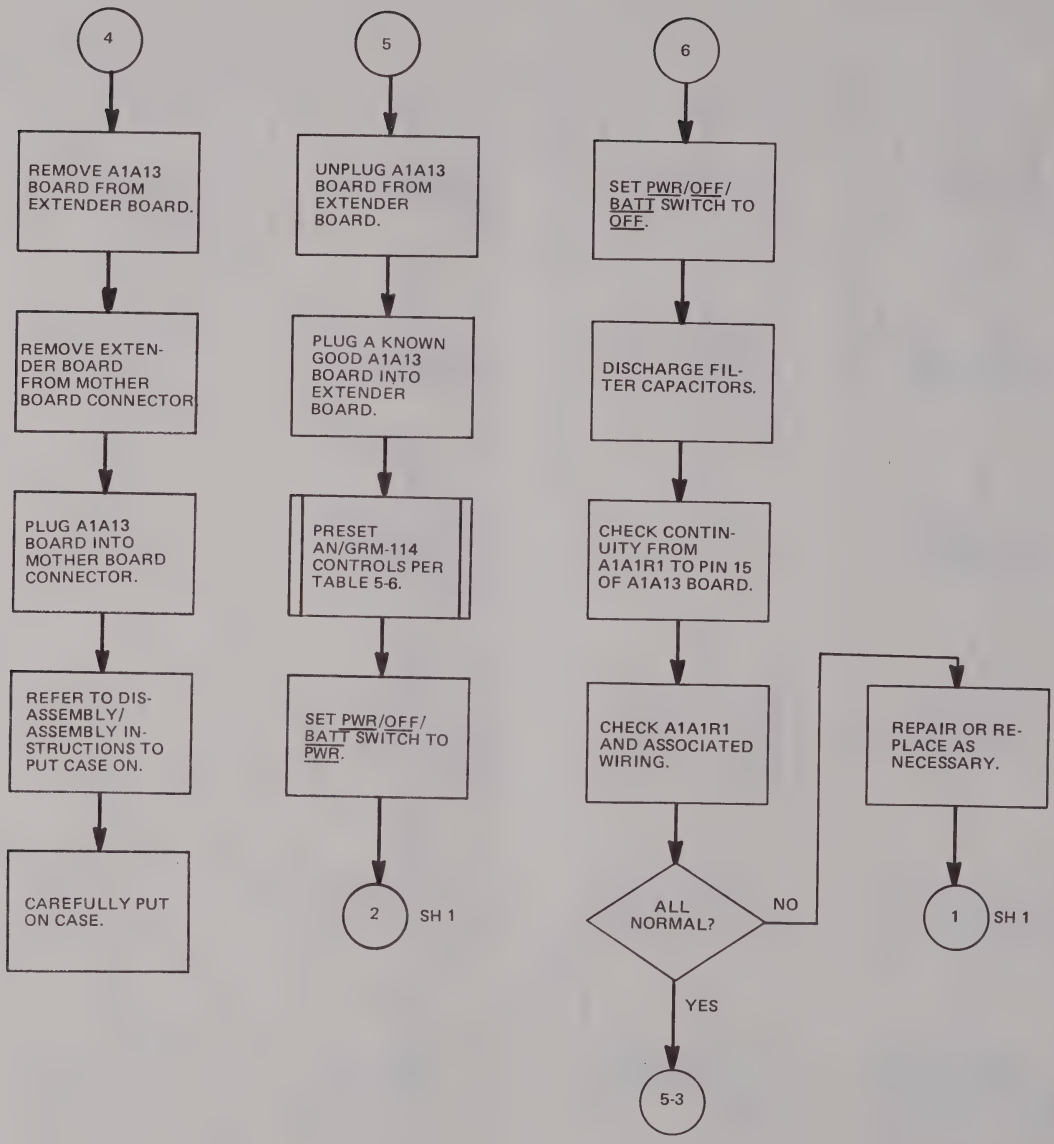
4
REMOVE A1A13 BOARD FROM EXTENDER BOARD.
REMOVE EXTENDER BOARD FROM MOTHER BOARD CONNECTOR.
PLUG A1A13 BOARD INTO MOTHER BOARD CONNECTOR.
REFER TO DISASSEMBLY/ ASSEMBLY INSTRUCTIONS TO PUT CASE ON.
CAREFULLY PUT ON CASE.
5
UNPLUG A1A13 BOARD FROM EXTENDER BOARD.
PLUG A KNOWN GOOD A1A13 BOARD INTO EXTENDER BOARD.
PRESET AN/GRM-114 CONTROLS PER TABLE 5-6.
SET PWR/OFF/ BATT SWITCH TO PWR.
2
SH 1
6
SET PWR/OFF/ BATT SWITCH TO OFF.
DISCHARGE FILTER CAPACITORS.
CHECK CONTINUITY FROM A1A1R1 TO PIN 15 OF A1A13 BOARD.
CHECK A1A1R1 AND ASSOCIATED WIRING.
ALL NORMAL?
NO
YES
REPAIR OR REPLACE AS NECESSARY.
1
SH 1
5-3

Figure 5-7. Frequency error measurement troubleshooting (sheet 3 of 3).

Table 5-9. RF Signal Generator Troubleshooting Initial Conditions

Control	Setting
INTENSITY	As required
EXT V/DIV	15 KHz
EXT V/DIV Vernier	CAL
AC/DC/OFF	DC
SWEEP	1 mS
SWEEP Vernier	CAL
MODULATION FREQ Hz	0000.0
INT MOD/OFF	OFF, fully ccw in detent
1 KHz INT MOD	OFF, fully ccw in detent
VERT	Midrange
ANALY DISPR	OFF, fully ccw in detent
HORIZ	Midrange
KHz	5
AM/FM	FM
BFO/OFF	OFF
VOL	Fully ccw
INT MOD/RCVR	RCVR
SQUELCH	Fully ccw, not in detent
DEV/PWR	SIG
GEN/RCVR	RCVR
RCVR WIDE/MID/NARROW	NARROW
RF LEVEL/BFO INJECTION	10 μV
HI LVL/μV X 100/NORM	NORM
AUTO/OFF/ZERO, BATT	AUTO
PWR/OFF/BATT	PWR
FREQUENCY MHz	111 100 0

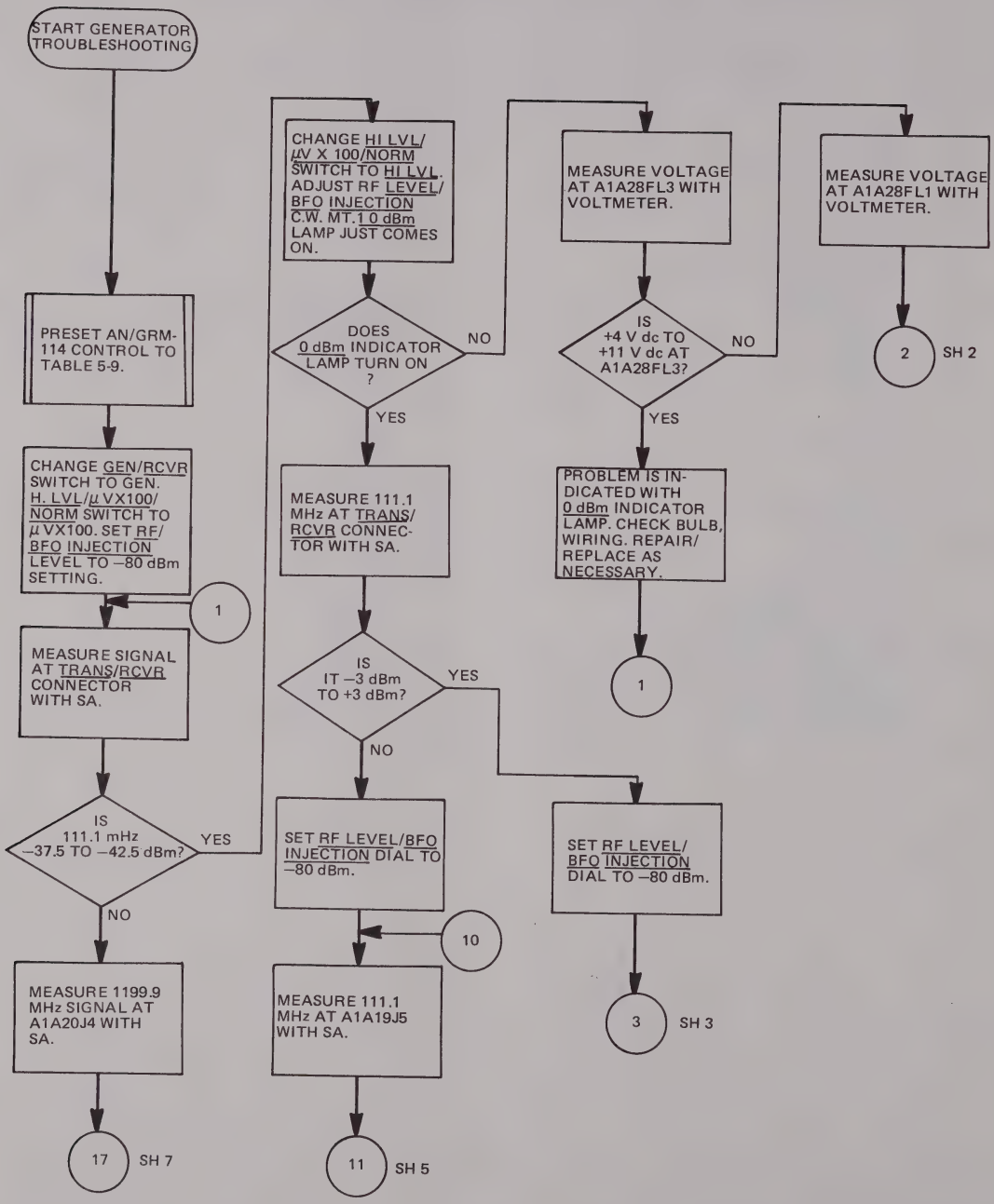
START GENERATOR TROUBLESHOOTING
PRESET AN/GRM-114 CONTROL TO TABLE 5-9.
CHANGE GEN/RCVR SWITCH TO GEN. H. LVL/μVX100/NORM SWITCH TO μVX100. SET RF/BFO INJECTION LEVEL TO −80 dBm SETTING.
1
MEASURE SIGNAL AT TRANS/RCVR CONNECTOR WITH SA.
IS 111.1 mHz −37.5 TO −42.5 dBm?
YES
NO
MEASURE 1199.9 MHz SIGNAL AT A1A20J4 WITH SA.
17
SH 7
CHANGE HI LVL/μV X 100/NORM SWITCH TO HI LVL. ADJUST RF LEVEL/BFO INJECTION C.W. MT. 10 dBm LAMP JUST COMES ON.
DOES 0 dBm INDICATOR LAMP TURN ON ?
NO
YES
MEASURE 111.1 MHz AT TRANS/RCVR CONNECTOR WITH SA.
IS IT −3 dBm TO +3 dBm?
YES
NO
SET RF LEVEL/BFO INJECTION DIAL TO −80 dBm.
10
MEASURE 111.1 MHz AT A1A19J5 WITH SA.
11
SH 5
MEASURE VOLTAGE AT A1A28FL3 WITH VOLTMETER.
IS +4 V dc TO +11 V dc AT A1A28FL3?
NO
YES
PROBLEM IS INDICATED WITH 0 dBm INDICATOR LAMP. CHECK BULB, WIRING. REPAIR/REPLACE AS NECESSARY.
1
SET RF LEVEL/BFO INJECTION DIAL TO −80 dBm.
3
SH 3
MEASURE VOLTAGE AT A1A28FL1 WITH VOLTMETER.
2
SH 2

Figure 5-8. RF signal generator troubleshooting (sheet 1 of 19)

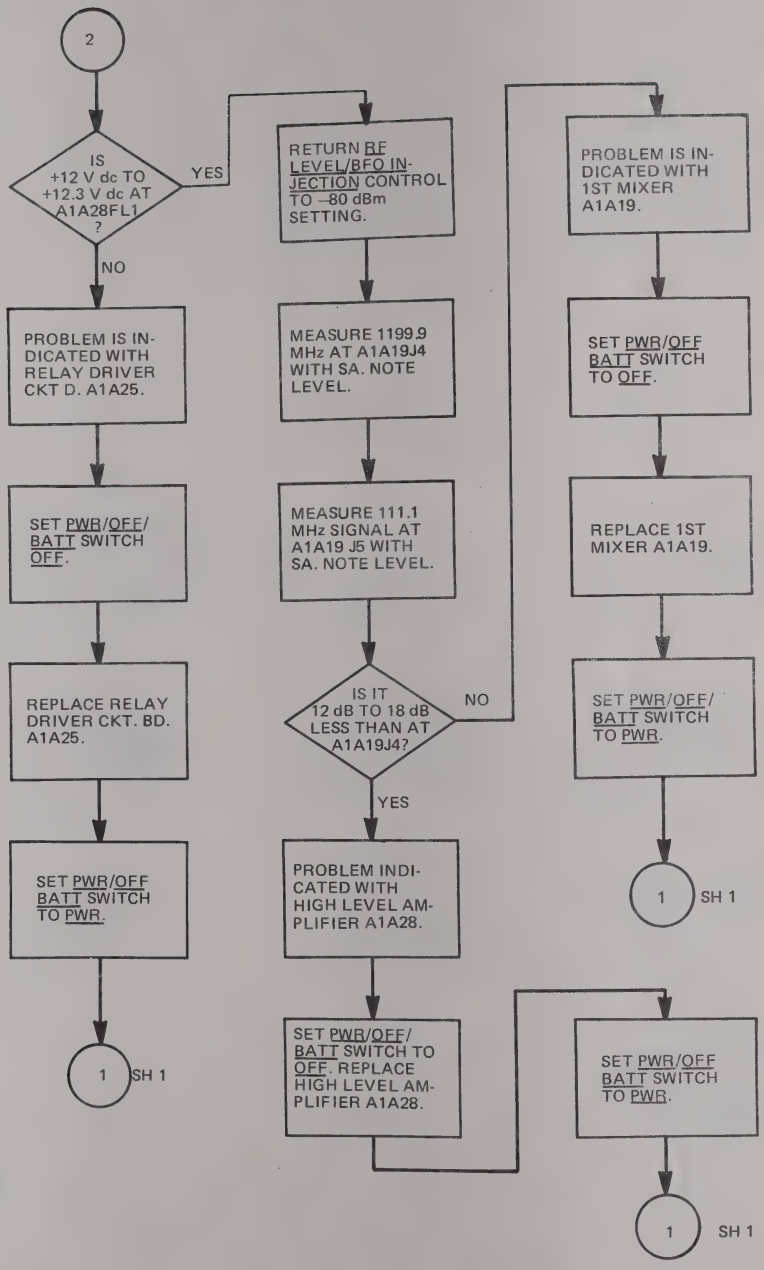
2
IS +12 V dc TO +12.3 V dc AT A1A28FL1 ?
YES
NO
PROBLEM IS INDICATED WITH RELAY DRIVER CKT D. A1A25.
SET PWR/OFF/BATT SWITCH OFF.
REPLACE RELAY DRIVER CKT. BD. A1A25.
SET PWR/OFF BATT SWITCH TO PWR.
1
SH 1
RETURN RF LEVEL/BFO INJECTION CONTROL TO −80 dBm SETTING.
MEASURE 1199.9 MHz AT A1A19J4 WITH SA. NOTE LEVEL.
MEASURE 111.1 MHz SIGNAL AT A1A19 J5 WITH SA. NOTE LEVEL.
IS IT 12 dB TO 18 dB LESS THAN AT A1A19J4?
NO
YES
PROBLEM INDICATED WITH HIGH LEVEL AMPLIFIER A1A28.
SET PWR/OFF/BATT SWITCH TO OFF. REPLACE HIGH LEVEL AMPLIFIER A1A28.
PROBLEM IS INDICATED WITH 1ST MIXER A1A19.
SET PWR/OFF BATT SWITCH TO OFF.
REPLACE 1ST MIXER A1A19.
SET PWR/OFF/BATT SWITCH TO PWR.
1
SH 1
SET PWR/OFF BATT SWITCH TO PWR.
1
SH 1

Figure 5-8. RF signal generator troubleshooting (sheet 2 of 19)

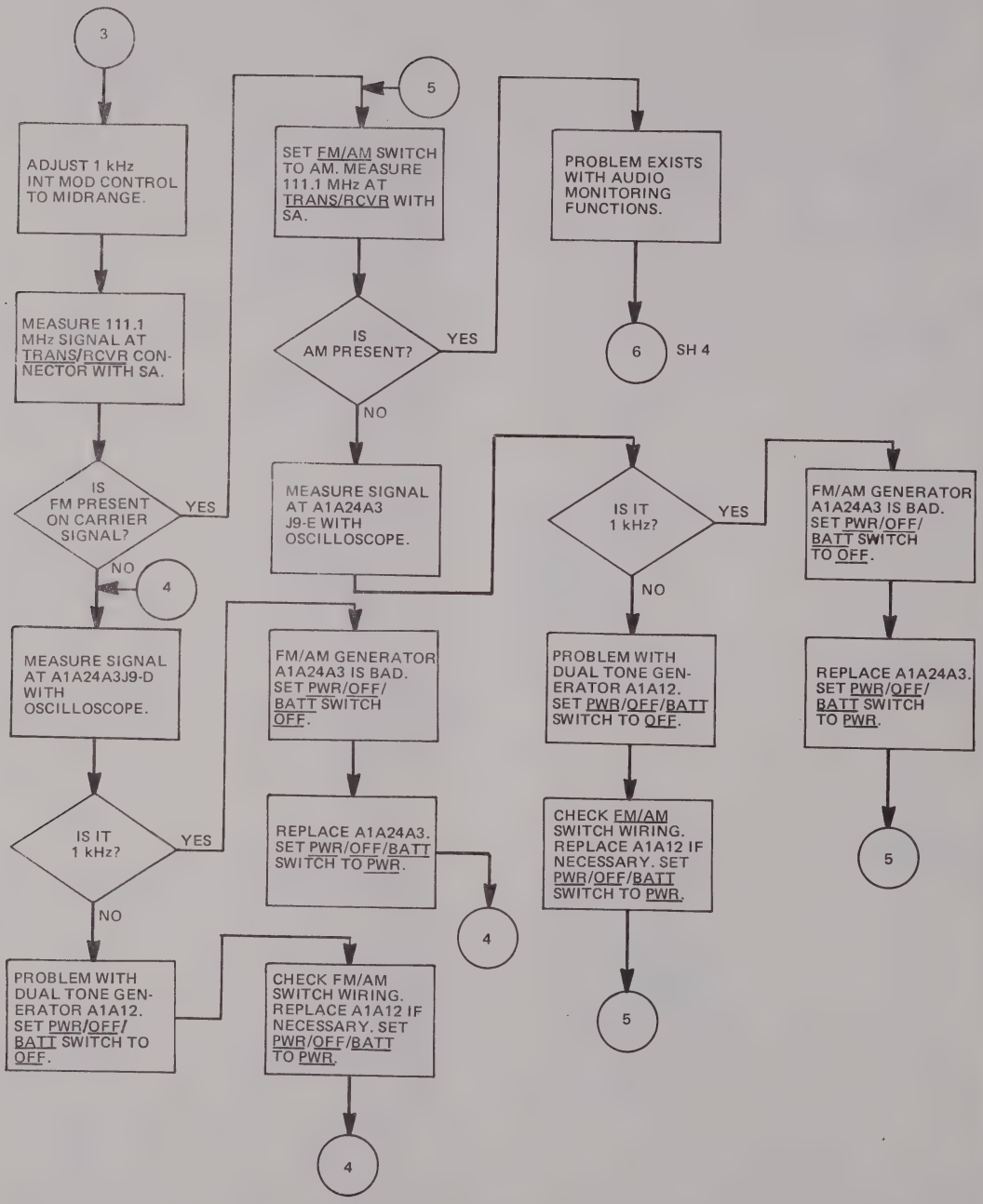
3
ADJUST 1 kHz INT MOD CONTROL TO MIDRANGE.
MEASURE 111.1 MHz SIGNAL AT TRANS/RCVR CONNECTOR WITH SA.
IS FM PRESENT ON CARRIER SIGNAL?
YES
NO
4
MEASURE SIGNAL AT A1A24A3J9-D WITH OSCILLOSCOPE.
IS IT 1 kHz?
YES
NO
PROBLEM WITH DUAL TONE GENERATOR A1A12. SET PWR/OFF/BATT SWITCH TO OFF.
5
SET FM/AM SWITCH TO AM. MEASURE 111.1 MHz AT TRANS/RCVR WITH SA.
IS AM PRESENT?
YES
NO
MEASURE SIGNAL AT A1A24A3 J9-E WITH OSCILLOSCOPE.
FM/AM GENERATOR A1A24A3 IS BAD. SET PWR/OFF/BATT SWITCH OFF.
REPLACE A1A24A3. SET PWR/OFF/BATT SWITCH TO PWR.
4
CHECK FM/AM SWITCH WIRING. REPLACE A1A12 IF NECESSARY. SET PWR/OFF/BATT TO PWR.
4
PROBLEM EXISTS WITH AUDIO MONITORING FUNCTIONS.
6
SH 4
IS IT 1 kHz?
YES
NO
FM/AM GENERATOR A1A24A3 IS BAD. SET PWR/OFF/BATT SWITCH TO OFF.
REPLACE A1A24A3. SET PWR/OFF/BATT SWITCH TO PWR.
5
PROBLEM WITH DUAL TONE GENERATOR A1A12. SET PWR/OFF/BATT SWITCH TO OFF.
CHECK FM/AM SWITCH WIRING. REPLACE A1A12 IF NECESSARY. SET PWR/OFF/BATT SWITCH TO PWR.
5

Figure 5-8. RF signal generator troubleshooting (sheet 3 of 19)

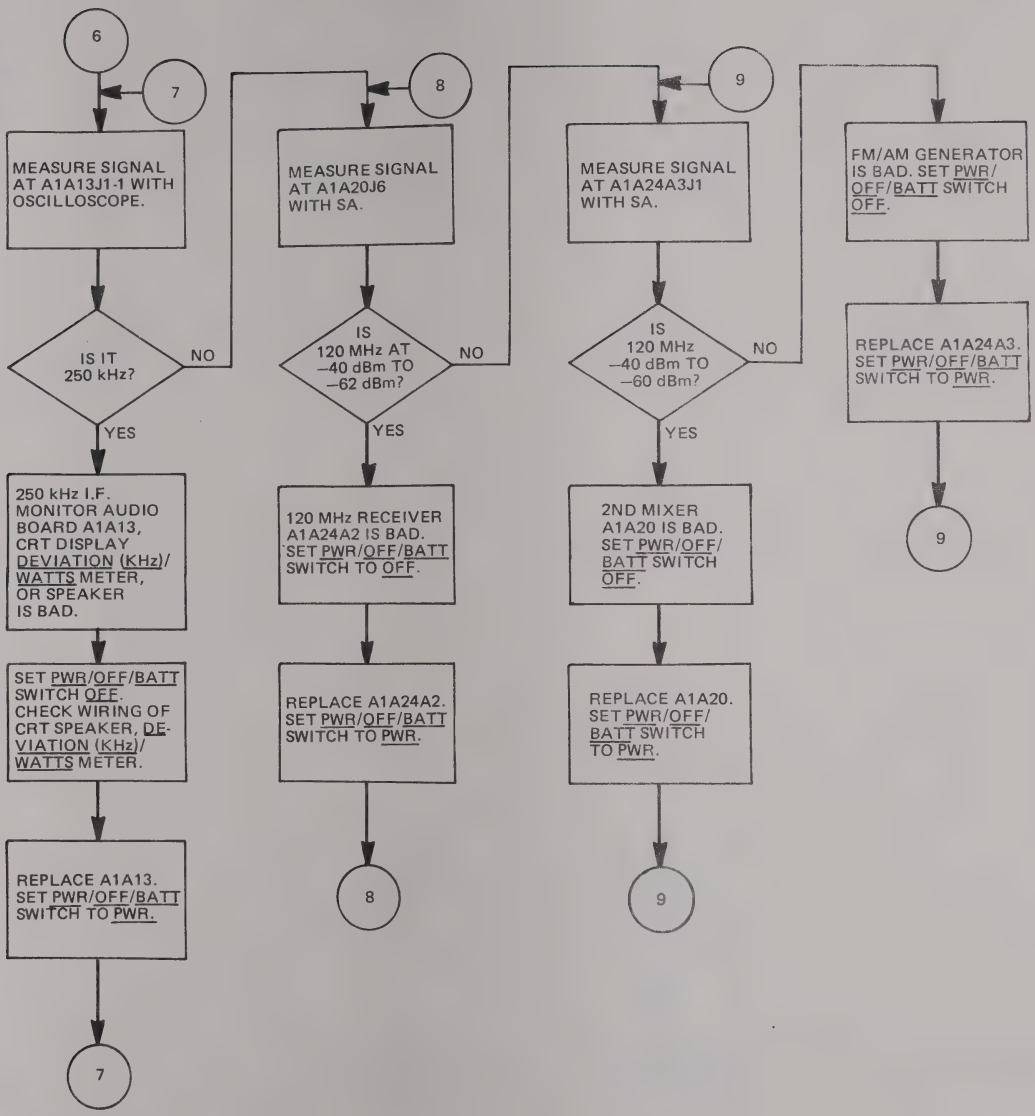
6
7
MEASURE SIGNAL AT A1A13J1-1 WITH OSCILLOSCOPE.
IS IT 250 kHz?
NO
YES
250 kHz I.F. MONITOR AUDIO BOARD A1A13, CRT DISPLAY DEVIATION (KHz)/ WATTS METER, OR SPEAKER IS BAD.
SET PWR/OFF/BATT SWITCH OFF. CHECK WIRING OF CRT SPEAKER, DEVIATION (KHz)/ WATTS METER.
REPLACE A1A13. SET PWR/OFF/BATT SWITCH TO PWR.
7
8
MEASURE SIGNAL AT A1A20J6 WITH SA.
IS 120 MHz AT –40 dBm TO –62 dBm?
NO
YES
120 MHz RECEIVER A1A24A2 IS BAD. SET PWR/OFF/BATT SWITCH TO OFF.
REPLACE A1A24A2. SET PWR/OFF/BATT SWITCH TO PWR.
8
9
MEASURE SIGNAL AT A1A24A3J1 WITH SA.
IS 120 MHz –40 dBm TO –60 dBm?
NO
YES
2ND MIXER A1A20 IS BAD. SET PWR/OFF/ BATT SWITCH OFF.
REPLACE A1A20. SET PWR/OFF/ BATT SWITCH TO PWR.
9
FM/AM GENERATOR IS BAD. SET PWR/ OFF/BATT SWITCH OFF.
REPLACE A1A24A3. SET PWR/OFF/BATT SWITCH TO PWR.
9

Figure 5-8. RF signal generator troubleshooting (sheet 4 of 19)

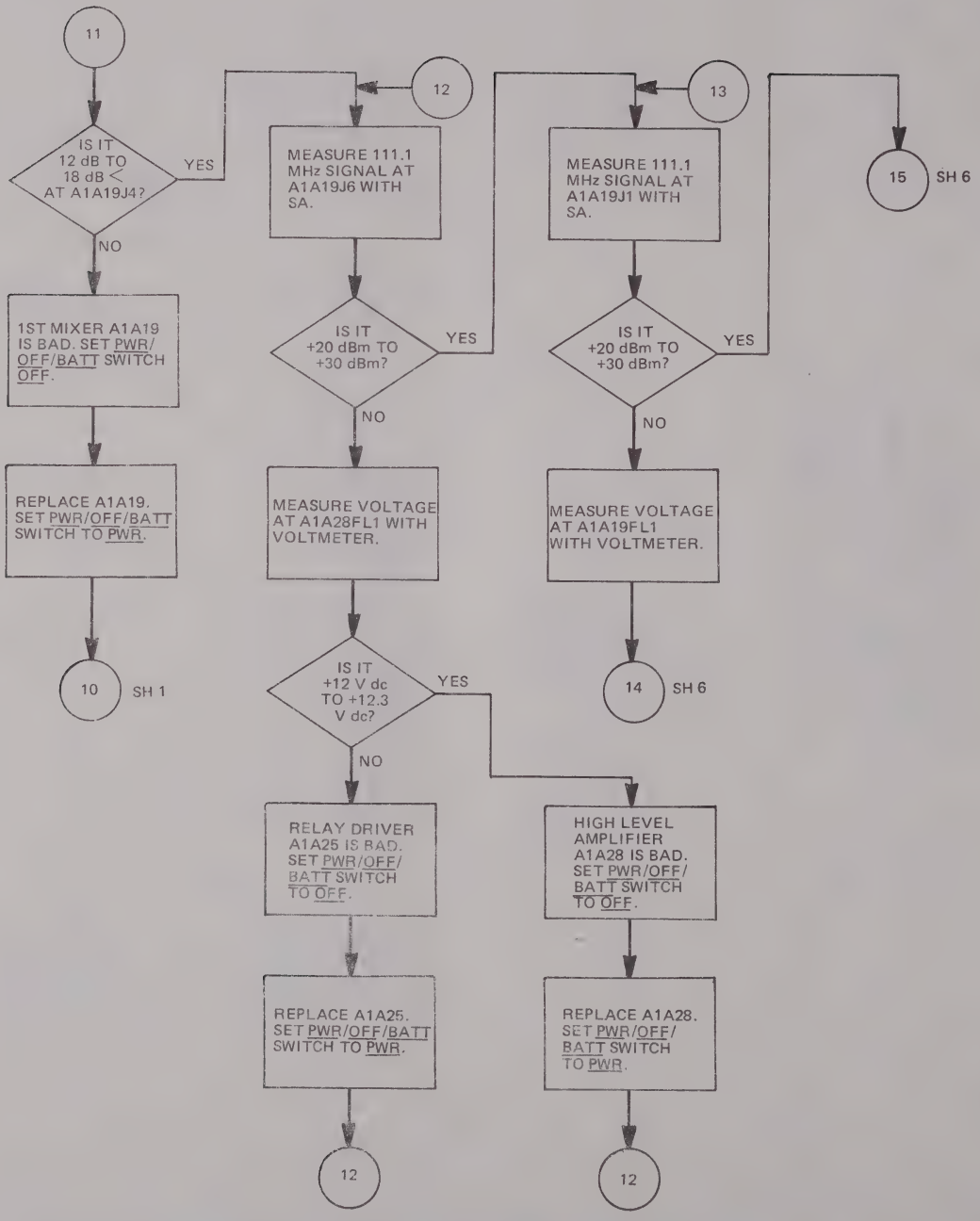
11
IS IT 12 dB TO 18 dB < AT A1A19J4?
YES
NO
1ST MIXER A1A19 IS BAD. SET PWR/OFF/BATT SWITCH OFF.
REPLACE A1A19. SET PWR/OFF/BATT SWITCH TO PWR.
10
SH 1
12
MEASURE 111.1 MHz SIGNAL AT A1A19J6 WITH SA.
IS IT +20 dBm TO +30 dBm?
YES
NO
MEASURE VOLTAGE AT A1A28FL1 WITH VOLTMETER.
IS IT +12 V dc TO +12.3 V dc?
YES
NO
RELAY DRIVER A1A25 IS BAD. SET PWR/OFF/BATT SWITCH TO OFF.
REPLACE A1A25. SET PWR/OFF/BATT SWITCH TO PWR.
12
13
MEASURE 111.1 MHz SIGNAL AT A1A19J1 WITH SA.
IS IT +20 dBm TO +30 dBm?
YES
NO
MEASURE VOLTAGE AT A1A19FL1 WITH VOLTMETER.
14
SH 6
HIGH LEVEL AMPLIFIER A1A28 IS BAD. SET PWR/OFF/BATT SWITCH TO OFF.
REPLACE A1A28. SET PWR/OFF/BATT SWITCH TO PWR.
12
15
SH 6

Figure 5-8. RF signal generator troubleshooting (sheet 5 of 19)

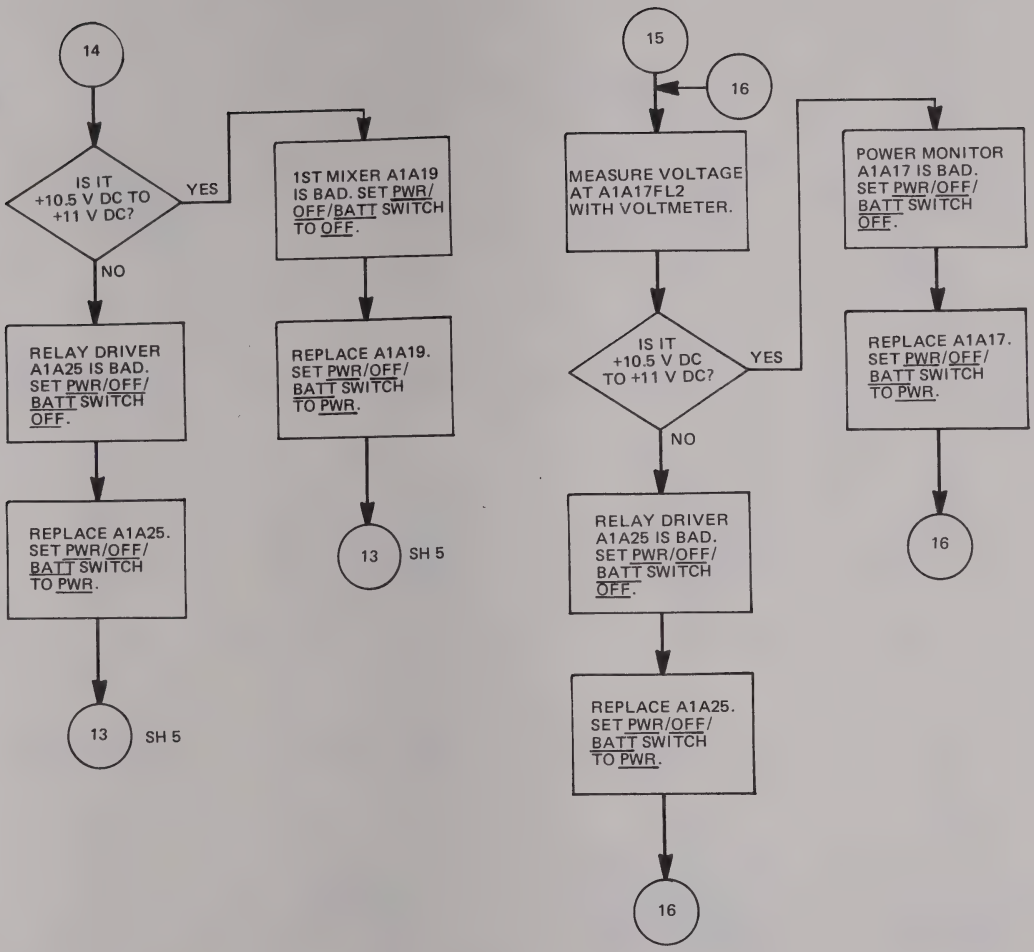
14
IS IT +10.5 V DC TO +11 V DC?
YES
NO
1ST MIXER A1A19 IS BAD. SET PWR/OFF/BATT SWITCH TO OFF.
REPLACE A1A19. SET PWR/OFF/BATT SWITCH TO PWR.
13 SH 5
RELAY DRIVER A1A25 IS BAD. SET PWR/OFF/BATT SWITCH OFF.
REPLACE A1A25. SET PWR/OFF/BATT SWITCH TO PWR.
13 SH 5
15
16
MEASURE VOLTAGE AT A1A17FL2 WITH VOLTMETER.
IS IT +10.5 V DC TO +11 V DC?
YES
NO
POWER MONITOR A1A17 IS BAD. SET PWR/OFF/BATT SWITCH OFF.
REPLACE A1A17. SET PWR/OFF/BATT SWITCH TO PWR.
16
RELAY DRIVER A1A25 IS BAD. SET PWR/OFF/BATT SWITCH OFF.
REPLACE A1A25. SET PWR/OFF/BATT SWITCH TO PWR.
16

Figure 5-8. RF signal generator troubleshooting (sheet 6 of 19)

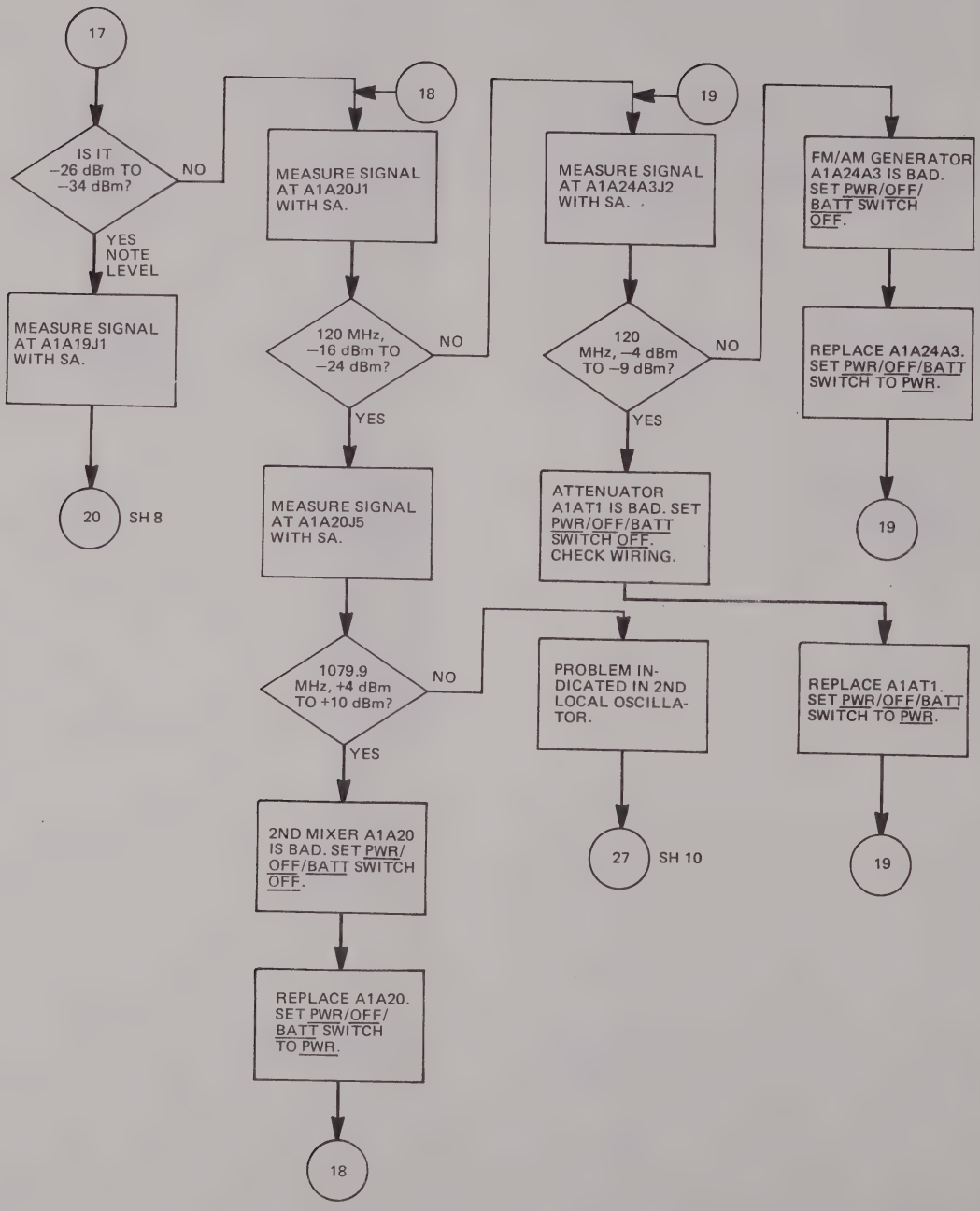

Figure 5-8. RF signal generator troubleshooting (sheet 7 of 19)

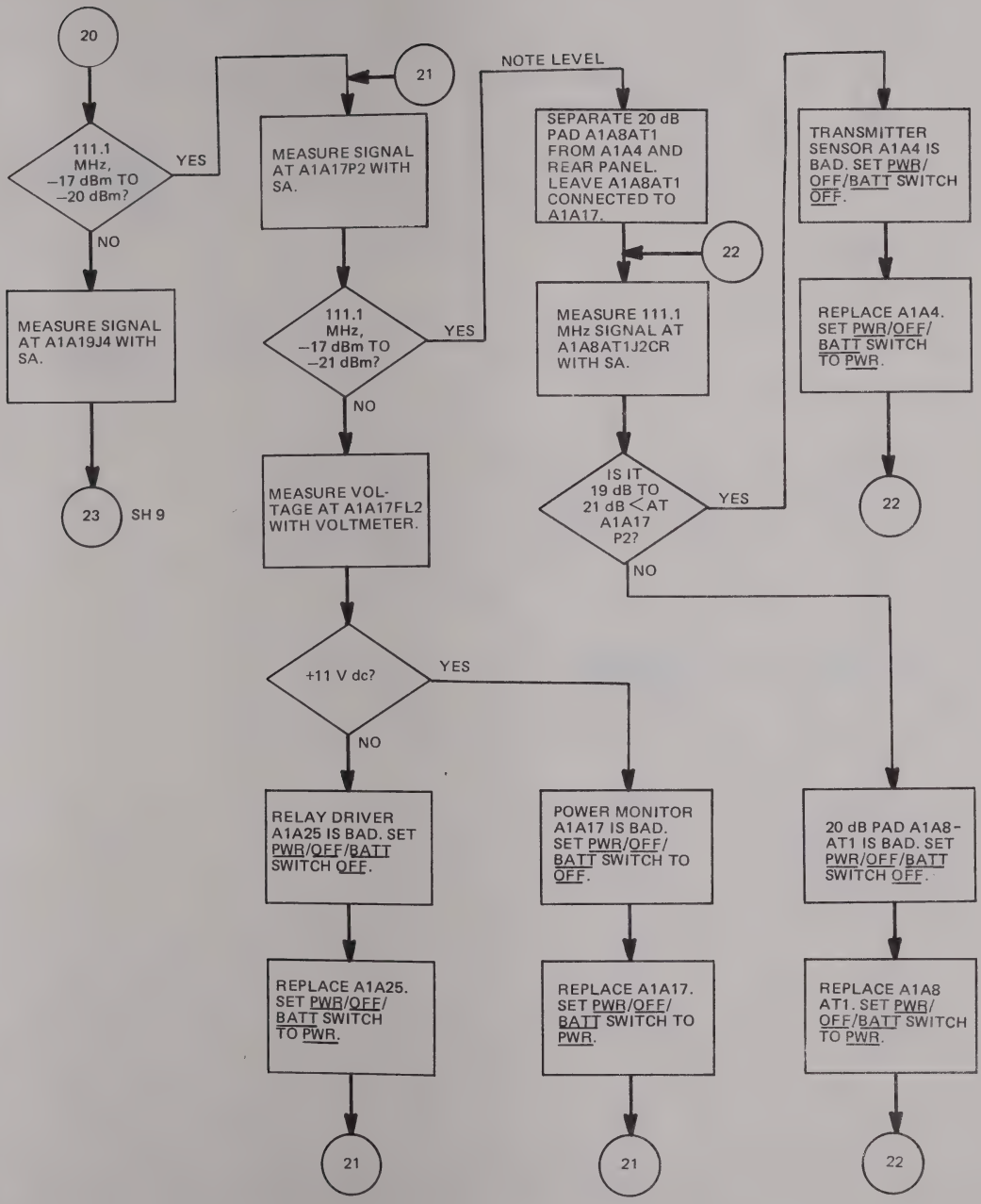
20
111.1 MHz, −17 dBm TO −20 dBm?
YES
NO
MEASURE SIGNAL AT A1A19J4 WITH SA.
23
SH 9
21
MEASURE SIGNAL AT A1A17P2 WITH SA.
111.1 MHz, −17 dBm TO −21 dBm?
YES
NO
MEASURE VOLTAGE AT A1A17FL2 WITH VOLTMETER.
+11 V dc?
YES
NO
RELAY DRIVER A1A25 IS BAD. SET PWR/OFF/BATT SWITCH OFF.
REPLACE A1A25. SET PWR/OFF/BATT SWITCH TO PWR.
21
NOTE LEVEL
SEPARATE 20 dB PAD A1A8AT1 FROM A1A4 AND REAR PANEL. LEAVE A1A8AT1 CONNECTED TO A1A17.
22
MEASURE 111.1 MHz SIGNAL AT A1A8AT1J2CR WITH SA.
IS IT 19 dB TO 21 dB < AT A1A17 P2?
YES
NO
POWER MONITOR A1A17 IS BAD. SET PWR/OFF/BATT SWITCH TO OFF.
REPLACE A1A17. SET PWR/OFF/BATT SWITCH TO PWR.
21
TRANSMITTER SENSOR A1A4 IS BAD. SET PWR/OFF/BATT SWITCH OFF.
REPLACE A1A4. SET PWR/OFF/BATT SWITCH TO PWR.
22
20 dB PAD A1A8-AT1 IS BAD. SET PWR/OFF/BATT SWITCH OFF.
REPLACE A1A8 AT1. SET PWR/OFF/BATT SWITCH TO PWR.
22

Figure 5-8. RF signal generator troubleshooting (sheet 8 of 19)

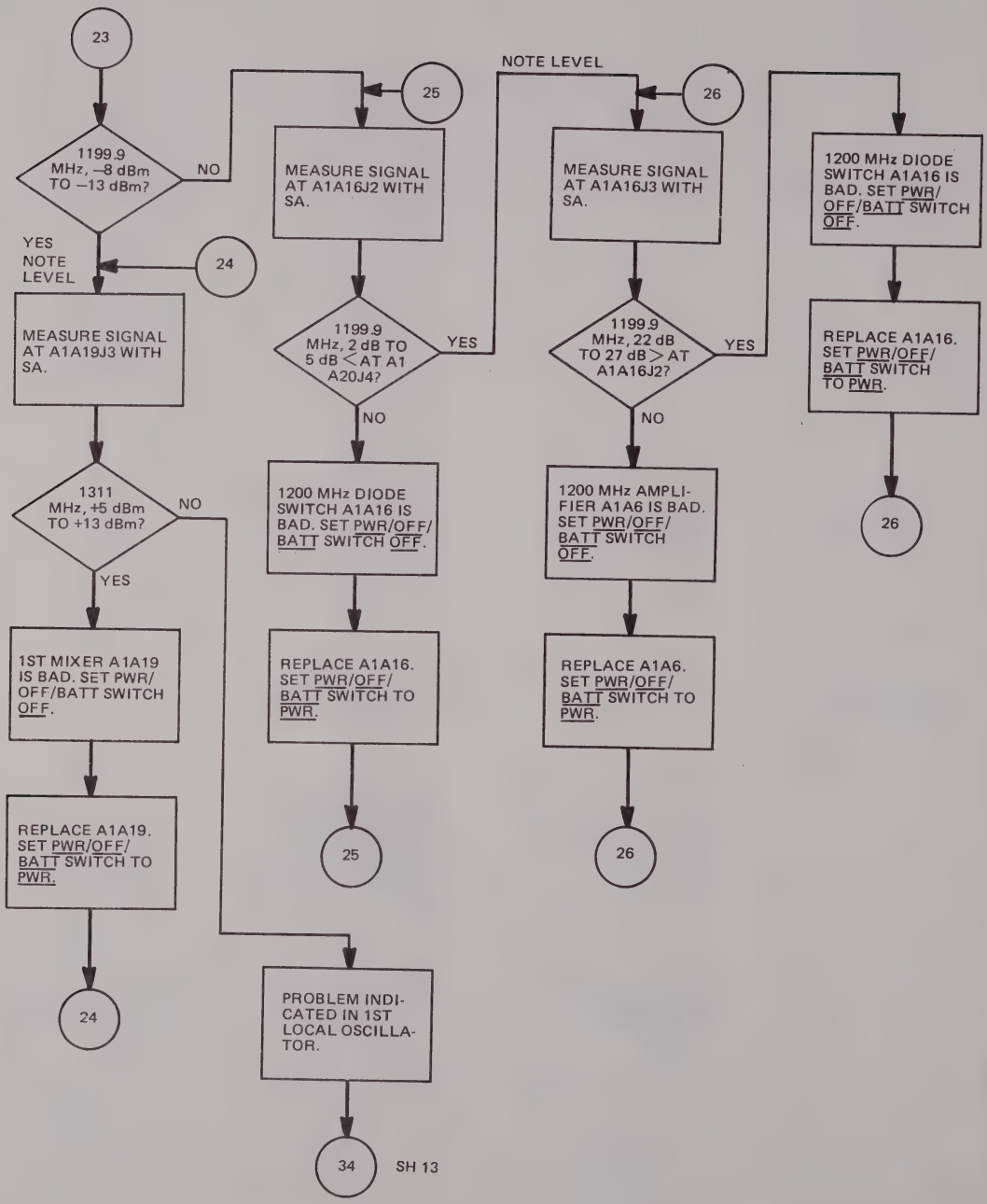
23
1199.9 MHz, –8 dBm TO –13 dBm?
NO
YES
NOTE LEVEL
24
MEASURE SIGNAL AT A1A19J3 WITH SA.
1311 MHz, +5 dBm TO +13 dBm?
NO
YES
1ST MIXER A1A19 IS BAD. SET PWR/OFF/BATT SWITCH OFF.
REPLACE A1A19. SET PWR/OFF/BATT SWITCH TO PWR.
24
PROBLEM INDICATED IN 1ST LOCAL OSCILLATOR.
34
SH 13
25
MEASURE SIGNAL AT A1A16J2 WITH SA.
1199.9 MHz, 2 dB TO 5 dB < AT A1A20J4?
YES
NOTE LEVEL
NO
1200 MHz DIODE SWITCH A1A16 IS BAD. SET PWR/OFF/BATT SWITCH OFF.
REPLACE A1A16. SET PWR/OFF/BATT SWITCH TO PWR.
25
26
MEASURE SIGNAL AT A1A16J3 WITH SA.
1199.9 MHz, 22 dB TO 27 dB > AT A1A16J2?
YES
NO
1200 MHz AMPLIFIER A1A6 IS BAD. SET PWR/OFF/BATT SWITCH OFF.
REPLACE A1A6. SET PWR/OFF/BATT SWITCH TO PWR.
26
1200 MHz DIODE SWITCH A1A16 IS BAD. SET PWR/OFF/BATT SWITCH OFF.
REPLACE A1A16. SET PWR/OFF/BATT SWITCH TO PWR.
26

Figure 5-8. RF signal generator troubleshooting (sheet 9 of 19)

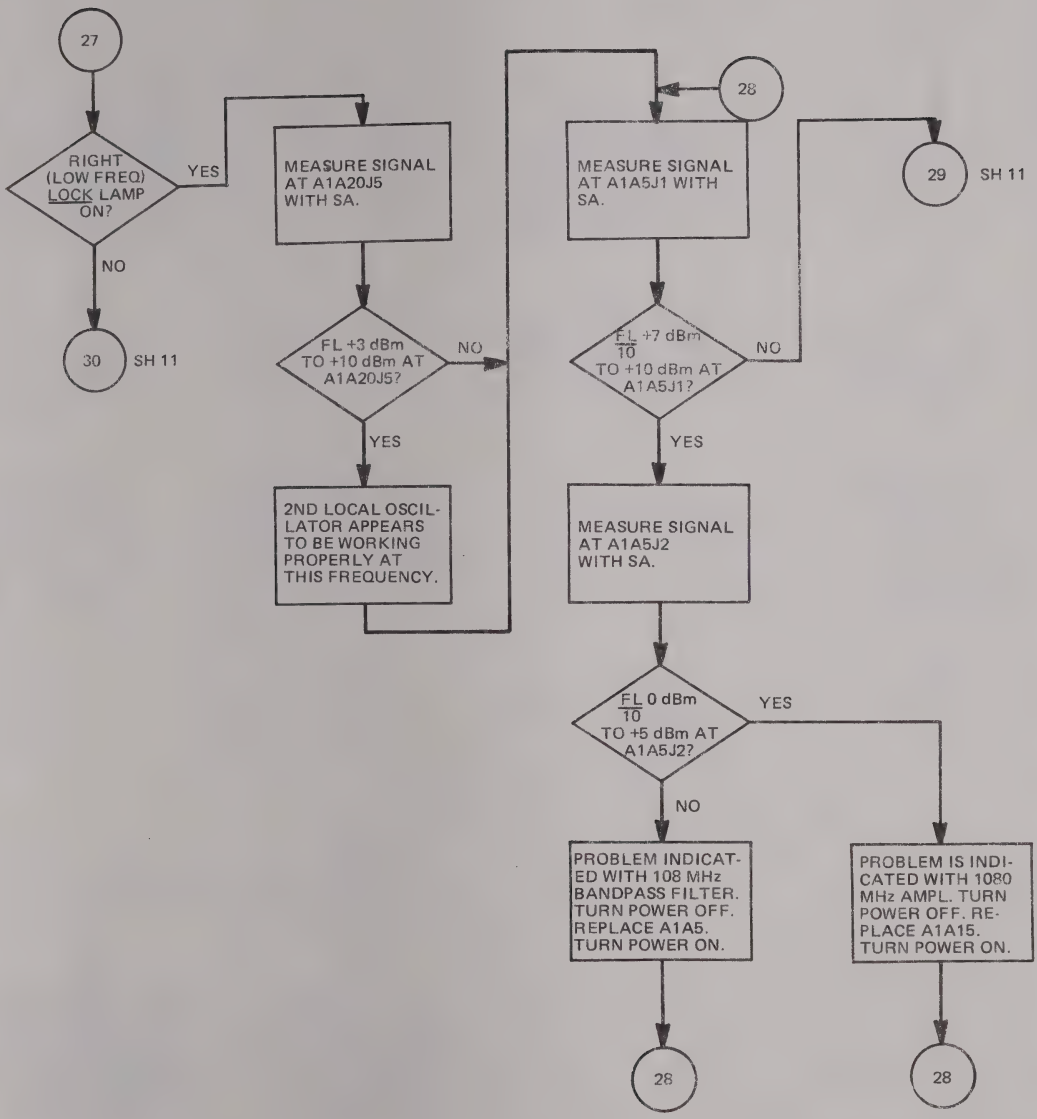
27
RIGHT (LOW FREQ) LOCK LAMP ON?
YES
NO
30
SH 11
MEASURE SIGNAL AT A1A20J5 WITH SA.
FL +3 dBm TO +10 dBm AT A1A20J5?
NO
YES
2ND LOCAL OSCILLATOR APPEARS TO BE WORKING PROPERLY AT THIS FREQUENCY.
28
MEASURE SIGNAL AT A1A5J1 WITH SA.
FL/10 +7 dBm TO +10 dBm AT A1A5J1?
NO
YES
29
SH 11
MEASURE SIGNAL AT A1A5J2 WITH SA.
FL/10 0 dBm TO +5 dBm AT A1A5J2?
YES
NO
PROBLEM INDICATED WITH 108 MHz BANDPASS FILTER. TURN POWER OFF. REPLACE A1A5. TURN POWER ON.
PROBLEM IS INDICATED WITH 1080 MHz AMPL. TURN POWER OFF. REPLACE A1A15. TURN POWER ON.
28
28

Figure 5-8. RF signal generator troubleshooting (sheet 10 of 19)

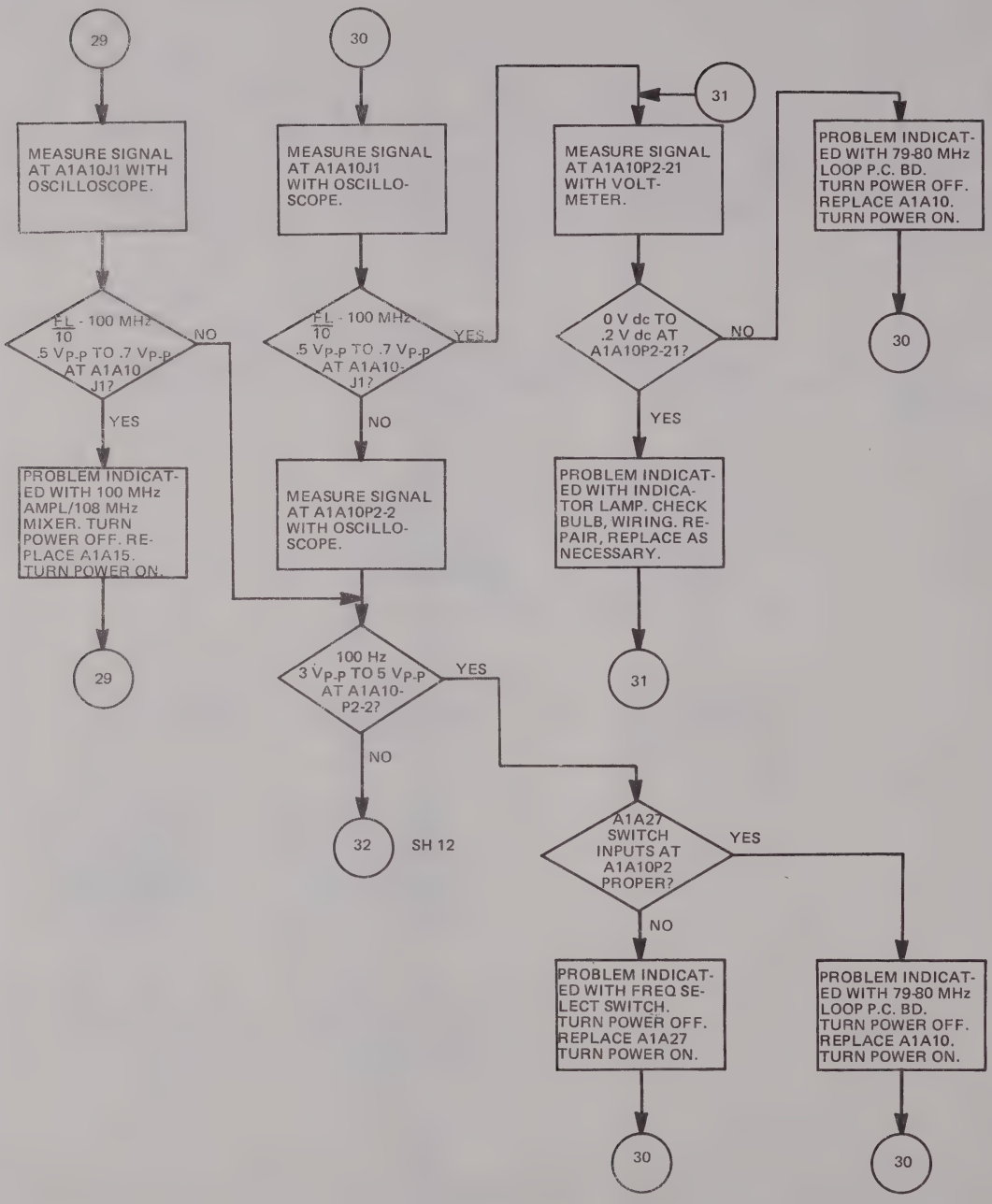
29
MEASURE SIGNAL AT A1A10J1 WITH OSCILLOSCOPE.
FL / 10 - 100 MHz .5 Vp-p TO .7 Vp-p AT A1A10 J1?
NO
YES
PROBLEM INDICATED WITH 100 MHz AMPL/108 MHz MIXER. TURN POWER OFF. REPLACE A1A15. TURN POWER ON.
29
30
MEASURE SIGNAL AT A1A10J1 WITH OSCILLOSCOPE.
FL / 10 - 100 MHz .5 Vp-p TO .7 Vp-p AT A1A10-J1?
YES
NO
MEASURE SIGNAL AT A1A10P2-2 WITH OSCILLOSCOPE.
100 Hz 3 Vp-p TO 5 Vp-p AT A1A10-P2-2?
YES
NO
32
SH 12
31
MEASURE SIGNAL AT A1A10P2-21 WITH VOLTMETER.
0 V dc TO .2 V dc AT A1A10P2-21?
NO
YES
PROBLEM INDICATED WITH INDICATOR LAMP. CHECK BULB, WIRING. REPAIR, REPLACE AS NECESSARY.
31
PROBLEM INDICATED WITH 79-80 MHz LOOP P.C. BD. TURN POWER OFF. REPLACE A1A10. TURN POWER ON.
30
A1A27 SWITCH INPUTS AT A1A10P2 PROPER?
YES
NO
PROBLEM INDICATED WITH FREQ SELECT SWITCH. TURN POWER OFF. REPLACE A1A27 TURN POWER ON.
30
PROBLEM INDICATED WITH 79-80 MHz LOOP P.C. BD. TURN POWER OFF. REPLACE A1A10. TURN POWER ON.
30

Figure 5-8. RF signal generator troubleshooting (sheet 11 of 19)

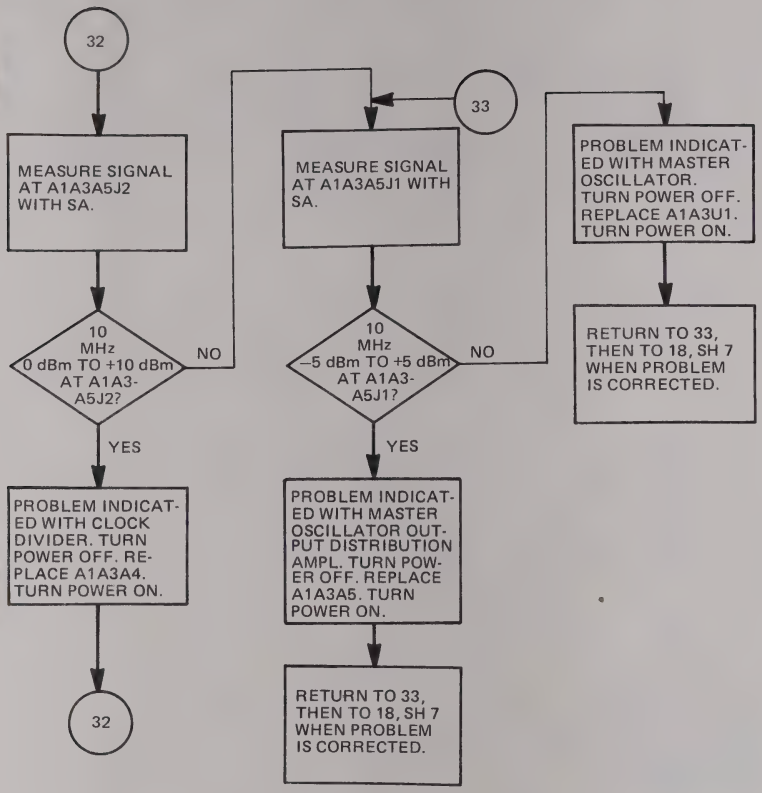
32
MEASURE SIGNAL AT A1A3A5J2 WITH SA.
10 MHz 0 dBm TO +10 dBm AT A1A3-A5J2?
NO
YES
PROBLEM INDICATED WITH CLOCK DIVIDER. TURN POWER OFF. REPLACE A1A3A4. TURN POWER ON.
32
33
MEASURE SIGNAL AT A1A3A5J1 WITH SA.
10 MHz −5 dBm TO +5 dBm AT A1A3-A5J1?
NO
YES
PROBLEM INDICATED WITH MASTER OSCILLATOR OUTPUT DISTRIBUTION AMPL. TURN POWER OFF. REPLACE A1A3A5. TURN POWER ON.
RETURN TO 33, THEN TO 18, SH 7 WHEN PROBLEM IS CORRECTED.
PROBLEM INDICATED WITH MASTER OSCILLATOR. TURN POWER OFF. REPLACE A1A3U1. TURN POWER ON.
RETURN TO 33, THEN TO 18, SH 7 WHEN PROBLEM IS CORRECTED.

Figure 5-8. RF signal generator troubleshooting (sheet 12 of 19)

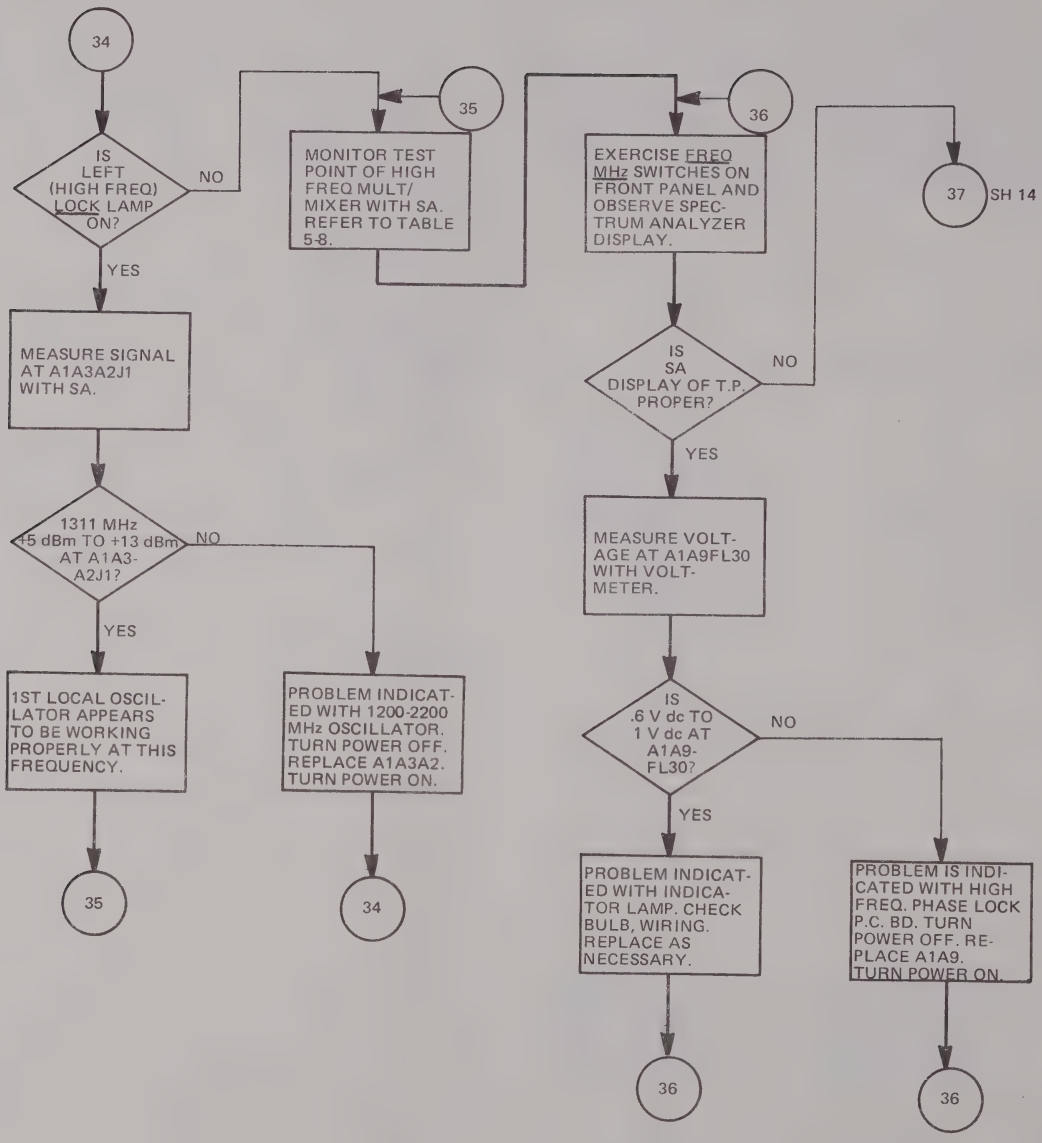
34
IS LEFT (HIGH FREQ) LOCK LAMP ON?
NO
YES
35
MONITOR TEST POINT OF HIGH FREQ MULT/ MIXER WITH SA. REFER TO TABLE 5-8.
36
EXERCISE FREQ MHz SWITCHES ON FRONT PANEL AND OBSERVE SPECTRUM ANALYZER DISPLAY.
37 SH 14
IS SA DISPLAY OF T.P. PROPER?
NO
YES
MEASURE SIGNAL AT A1A3A2J1 WITH SA.
1311 MHz +5 dBm TO +13 dBm AT A1A3-A2J1?
NO
YES
1ST LOCAL OSCILLATOR APPEARS TO BE WORKING PROPERLY AT THIS FREQUENCY.
PROBLEM INDICATED WITH 1200-2200 MHz OSCILLATOR. TURN POWER OFF. REPLACE A1A3A2. TURN POWER ON.
MEASURE VOLTAGE AT A1A9FL30 WITH VOLTMETER.
IS .6 V dc TO 1 V dc AT A1A9-FL30?
NO
YES
PROBLEM INDICATED WITH INDICATOR LAMP. CHECK BULB, WIRING. REPLACE AS NECESSARY.
PROBLEM IS INDICATED WITH HIGH FREQ. PHASE LOCK P.C. BD. TURN POWER OFF. REPLACE A1A9. TURN POWER ON.
35
34
36
36

Figure 5-8. RF signal generator troubleshooting (sheet 13 of 19)

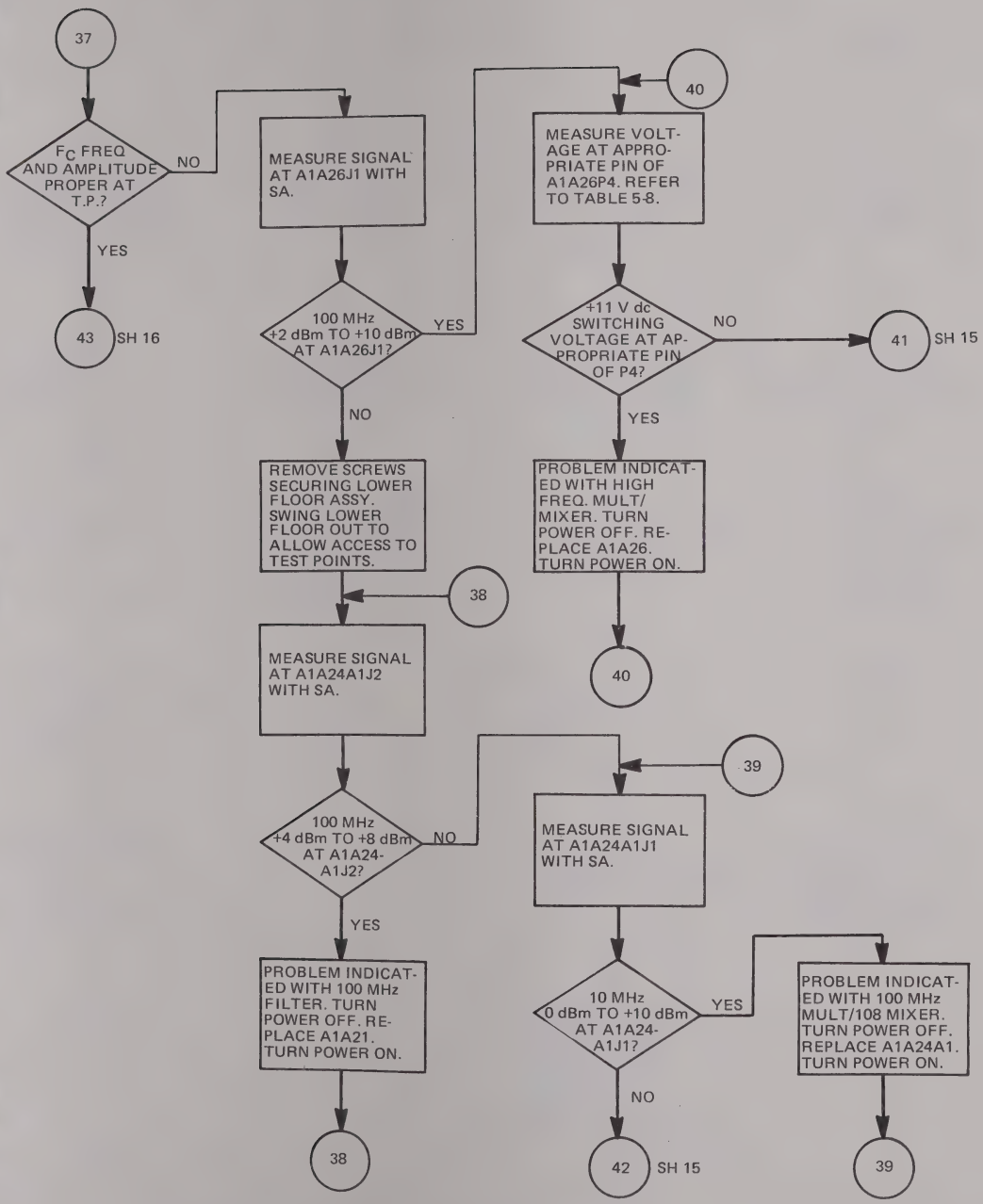
37
F_C FREQ AND AMPLITUDE PROPER AT T.P.?
NO
YES
43
SH 16
MEASURE SIGNAL AT A1A26J1 WITH SA.
100 MHz +2 dBm TO +10 dBm AT A1A26J1?
YES
NO
REMOVE SCREWS SECURING LOWER FLOOR ASSY. SWING LOWER FLOOR OUT TO ALLOW ACCESS TO TEST POINTS.
38
MEASURE SIGNAL AT A1A24A1J2 WITH SA.
100 MHz +4 dBm TO +8 dBm AT A1A24-A1J2?
NO
YES
PROBLEM INDICATED WITH 100 MHz FILTER. TURN POWER OFF. REPLACE A1A21. TURN POWER ON.
38
40
MEASURE VOLTAGE AT APPROPRIATE PIN OF A1A26P4. REFER TO TABLE 5-8.
+11 V dc SWITCHING VOLTAGE AT APPROPRIATE PIN OF P4?
NO
41
SH 15
YES
PROBLEM INDICATED WITH HIGH FREQ. MULT/MIXER. TURN POWER OFF. REPLACE A1A26. TURN POWER ON.
40
39
MEASURE SIGNAL AT A1A24A1J1 WITH SA.
10 MHz 0 dBm TO +10 dBm AT A1A24-A1J1?
YES
NO
42
SH 15
PROBLEM INDICATED WITH 100 MHz MULT/108 MIXER. TURN POWER OFF. REPLACE A1A24A1. TURN POWER ON.
39

Figure 5-8. RF signal generator troubleshooting (sheet 14 of 19)

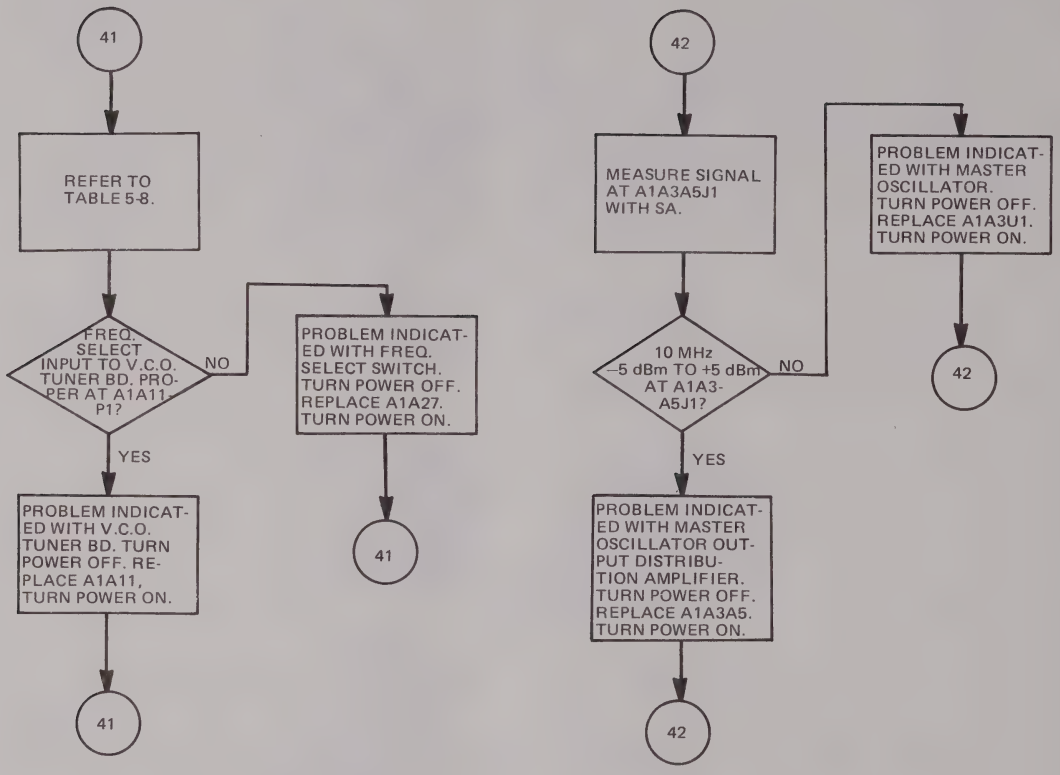
41
REFER TO TABLE 5-8.
FREQ. SELECT INPUT TO V.C.O. TUNER BD. PROPER AT A1A11-P1?
NO
YES
PROBLEM INDICATED WITH FREQ. SELECT SWITCH. TURN POWER OFF. REPLACE A1A27. TURN POWER ON.
41
PROBLEM INDICATED WITH V.C.O. TUNER BD. TURN POWER OFF. REPLACE A1A11, TURN POWER ON.
41
42
MEASURE SIGNAL AT A1A3A5J1 WITH SA.
10 MHz −5 dBm TO +5 dBm AT A1A3-A5J1?
NO
YES
PROBLEM INDICATED WITH MASTER OSCILLATOR. TURN POWER OFF. REPLACE A1A3U1. TURN POWER ON.
42
PROBLEM INDICATED WITH MASTER OSCILLATOR OUTPUT DISTRIBUTION AMPLIFIER. TURN POWER OFF. REPLACE A1A3A5. TURN POWER ON.
42

Figure 5-8. RF signal generator troubleshooting (sheet 15 of 19)

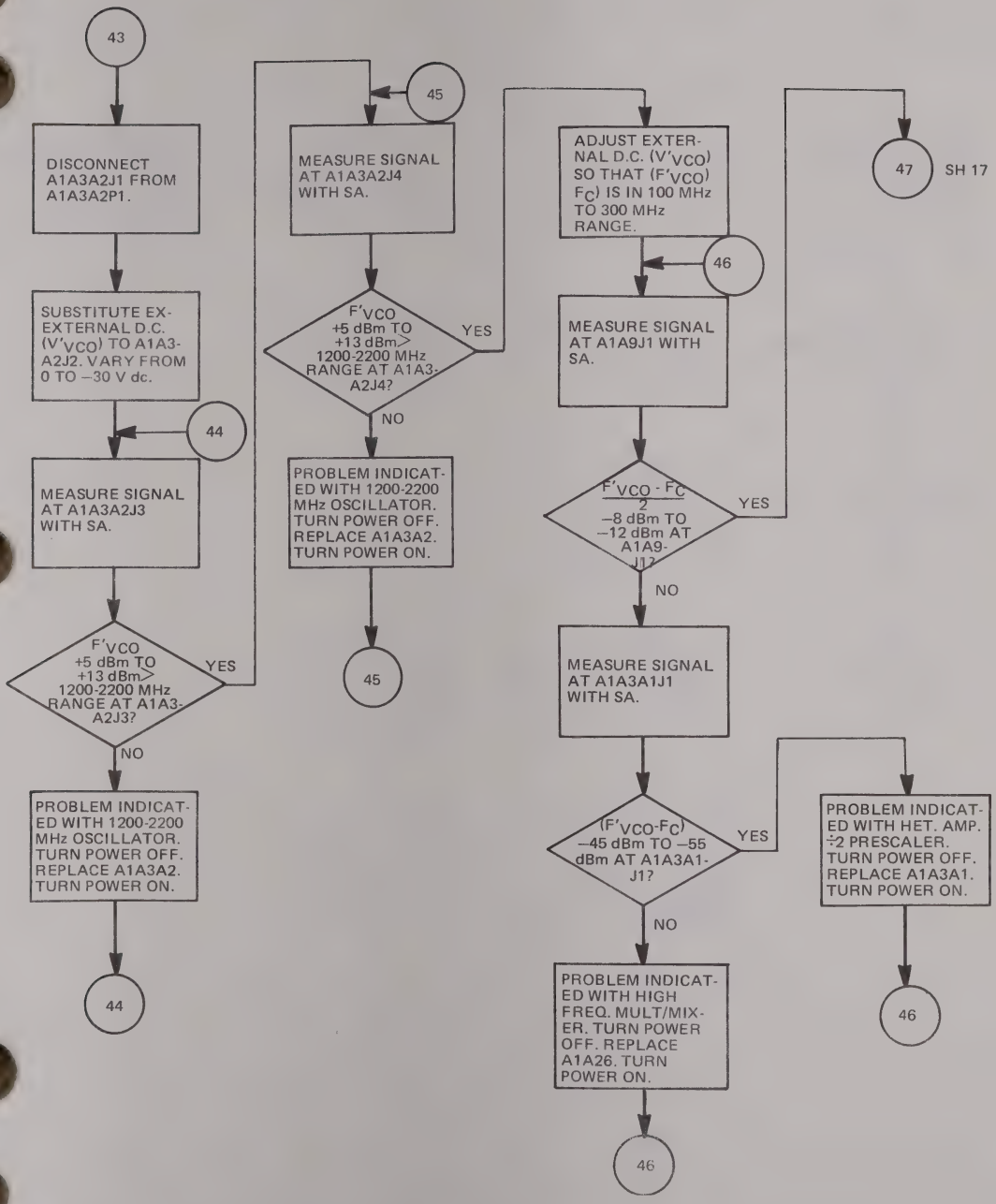
43
DISCONNECT A1A3A2J1 FROM A1A3A2P1.
SUBSTITUTE EXTERNAL D.C. (V'VCO) TO A1A3A2J2. VARY FROM 0 TO −30 V dc.
44
MEASURE SIGNAL AT A1A3A2J3 WITH SA.
F'VCO +5 dBm TO +13 dBm> 1200-2200 MHz RANGE AT A1A3A2J3?
YES
NO
PROBLEM INDICATED WITH 1200-2200 MHz OSCILLATOR. TURN POWER OFF. REPLACE A1A3A2. TURN POWER ON.
44
45
MEASURE SIGNAL AT A1A3A2J4 WITH SA.
F'VCO +5 dBm TO +13 dBm> 1200-2200 MHz RANGE AT A1A3A2J4?
YES
NO
PROBLEM INDICATED WITH 1200-2200 MHz OSCILLATOR. TURN POWER OFF. REPLACE A1A3A2. TURN POWER ON.
45
ADJUST EXTERNAL D.C. (V'VCO) SO THAT (F'VCO) FC) IS IN 100 MHz TO 300 MHz RANGE.
46
MEASURE SIGNAL AT A1A9J1 WITH SA.
F'VCO - FC / 2 −8 dBm TO −12 dBm AT A1A9J1?
YES
NO
MEASURE SIGNAL AT A1A3A1J1 WITH SA.
(F'VCO-FC) −45 dBm TO −55 dBm AT A1A3A1J1?
YES
NO
PROBLEM INDICATED WITH HIGH FREQ. MULT/MIXER. TURN POWER OFF. REPLACE A1A26. TURN POWER ON.
46
47 SH 17
PROBLEM INDICATED WITH HET. AMP. ÷2 PRESCALER. TURN POWER OFF. REPLACE A1A3A1. TURN POWER ON.
46

Figure 5-8. RF signal generator troubleshooting (sheet 16 of 19)

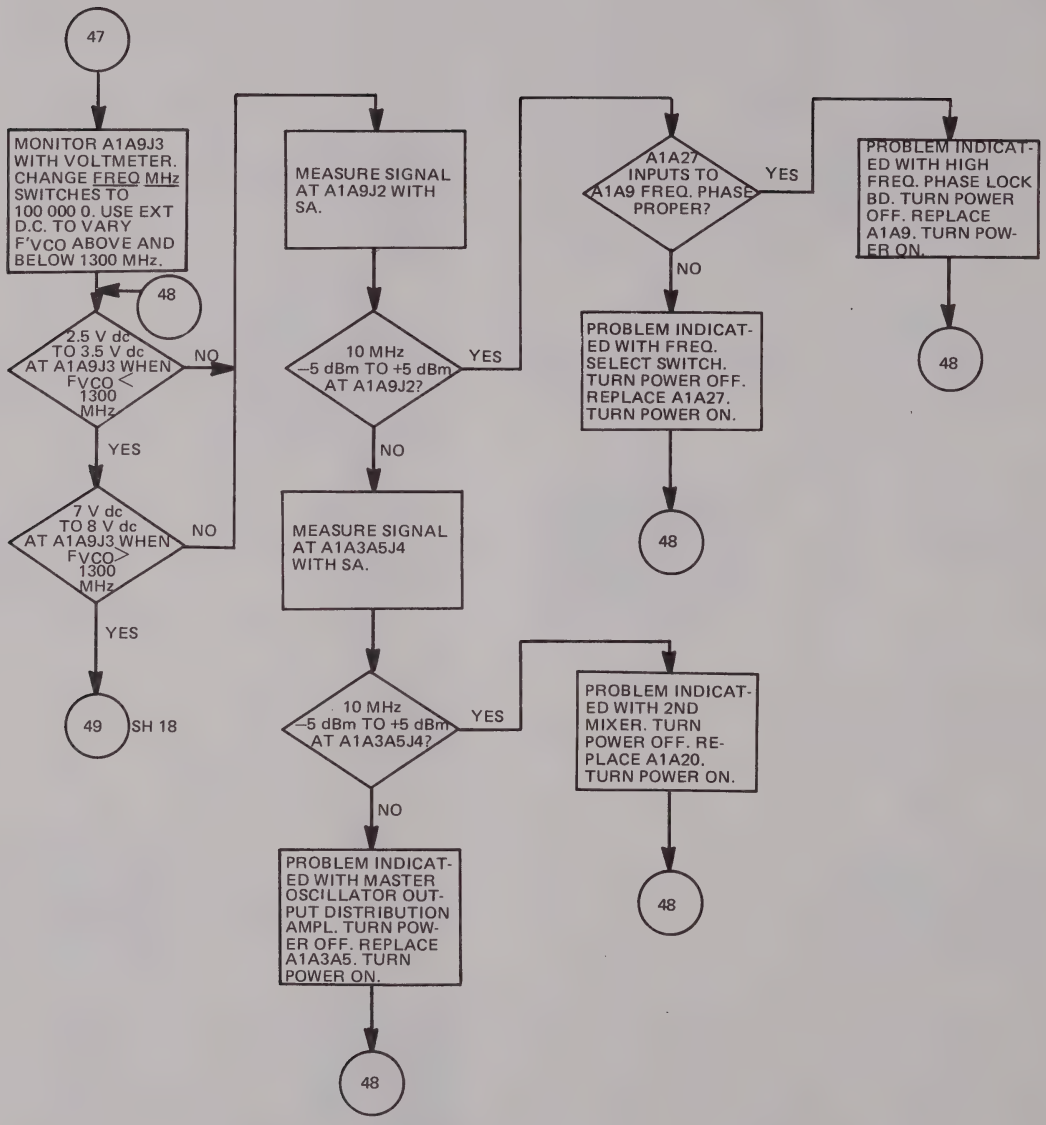
47
MONITOR A1A9J3 WITH VOLTMETER. CHANGE FREQ MHz SWITCHES TO 100 000 0. USE EXT D.C. TO VARY F'VCO ABOVE AND BELOW 1300 MHz.
48
2.5 V dc TO 3.5 V dc AT A1A9J3 WHEN FVCO < 1300 MHz
NO
YES
7 V dc TO 8 V dc AT A1A9J3 WHEN FVCO > 1300 MHz
NO
YES
49
SH 18
MEASURE SIGNAL AT A1A9J2 WITH SA.
10 MHz –5 dBm TO +5 dBm AT A1A9J2?
YES
NO
MEASURE SIGNAL AT A1A3A5J4 WITH SA.
10 MHz –5 dBm TO +5 dBm AT A1A3A5J4?
YES
NO
PROBLEM INDICATED WITH MASTER OSCILLATOR OUTPUT DISTRIBUTION AMPL. TURN POWER OFF. REPLACE A1A3A5. TURN POWER ON.
48
PROBLEM INDICATED WITH 2ND MIXER. TURN POWER OFF. REPLACE A1A20. TURN POWER ON.
48
A1A27 INPUTS TO A1A9 FREQ. PHASE PROPER?
YES
NO
PROBLEM INDICATED WITH FREQ. SELECT SWITCH. TURN POWER OFF. REPLACE A1A27. TURN POWER ON.
48
PROBLEM INDICATED WITH HIGH FREQ. PHASE LOCK BD. TURN POWER OFF. REPLACE A1A9. TURN POWER ON.
48

Figure 5-8. RF signal generator troubleshooting (sheet 17 of 19)

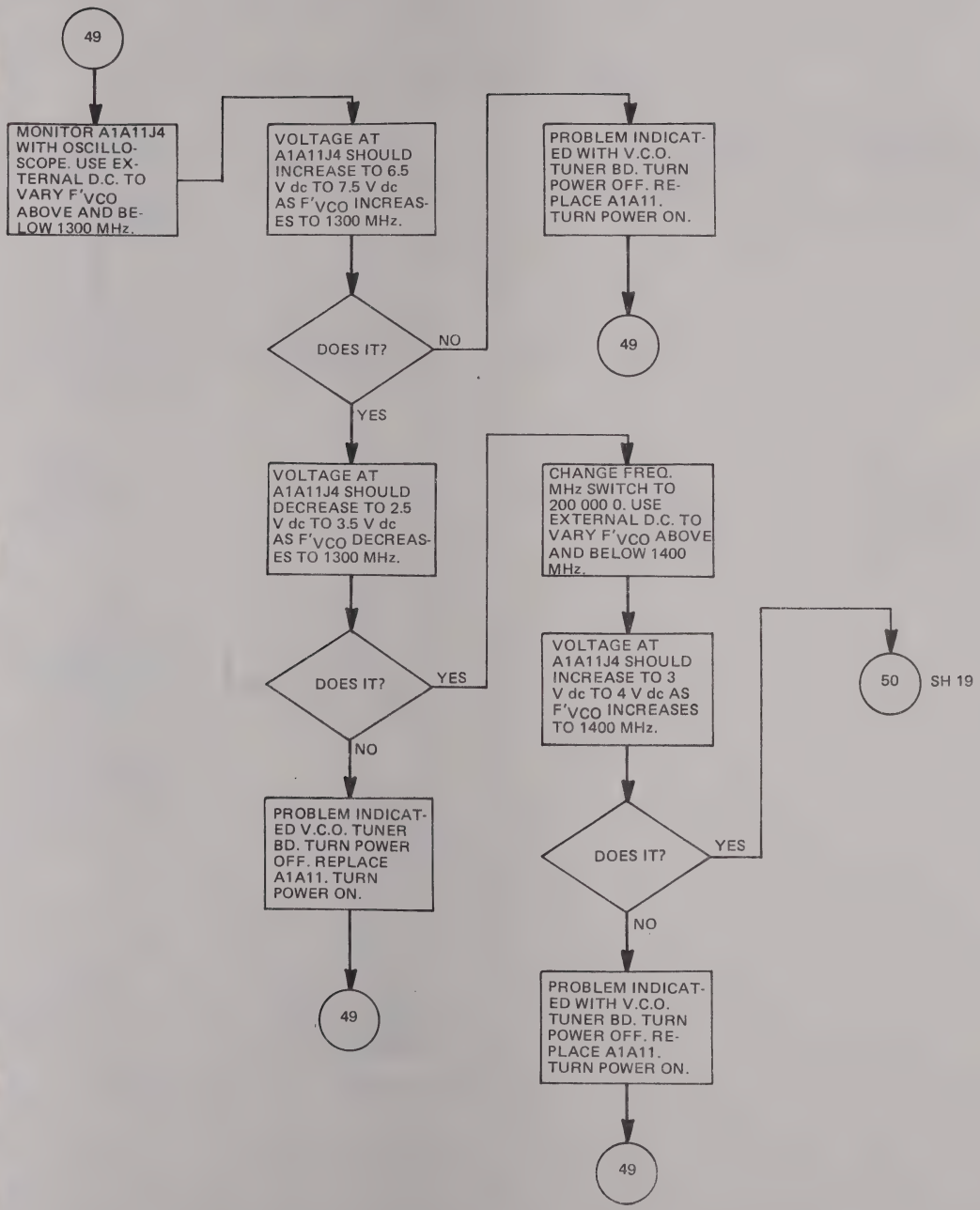
49
MONITOR A1A11J4 WITH OSCILLO-SCOPE. USE EX-TERNAL D.C. TO VARY F'VCO ABOVE AND BE-LOW 1300 MHz.
VOLTAGE AT A1A11J4 SHOULD INCREASE TO 6.5 V dc TO 7.5 V dc AS F'VCO INCREAS-ES TO 1300 MHz.
PROBLEM INDICAT-ED WITH V.C.O. TUNER BD. TURN POWER OFF. RE-PLACE A1A11. TURN POWER ON.
DOES IT?
NO
YES
49
VOLTAGE AT A1A11J4 SHOULD DECREASE TO 2.5 V dc TO 3.5 V dc AS F'VCO DECREAS-ES TO 1300 MHz.
CHANGE FREQ. MHz SWITCH TO 200 000 0. USE EXTERNAL D.C. TO VARY F'VCO ABOVE AND BELOW 1400 MHz.
DOES IT?
YES
NO
VOLTAGE AT A1A11J4 SHOULD INCREASE TO 3 V dc TO 4 V dc AS F'VCO INCREASES TO 1400 MHz.
50
SH 19
PROBLEM INDICAT-ED V.C.O. TUNER BD. TURN POWER OFF. REPLACE A1A11. TURN POWER ON.
DOES IT?
YES
NO
49
PROBLEM INDICAT-ED WITH V.C.O. TUNER BD. TURN POWER OFF. RE-PLACE A1A11. TURN POWER ON.
49

Figure 5-8. RF signal generator troubleshooting (sheet 18 of 19)

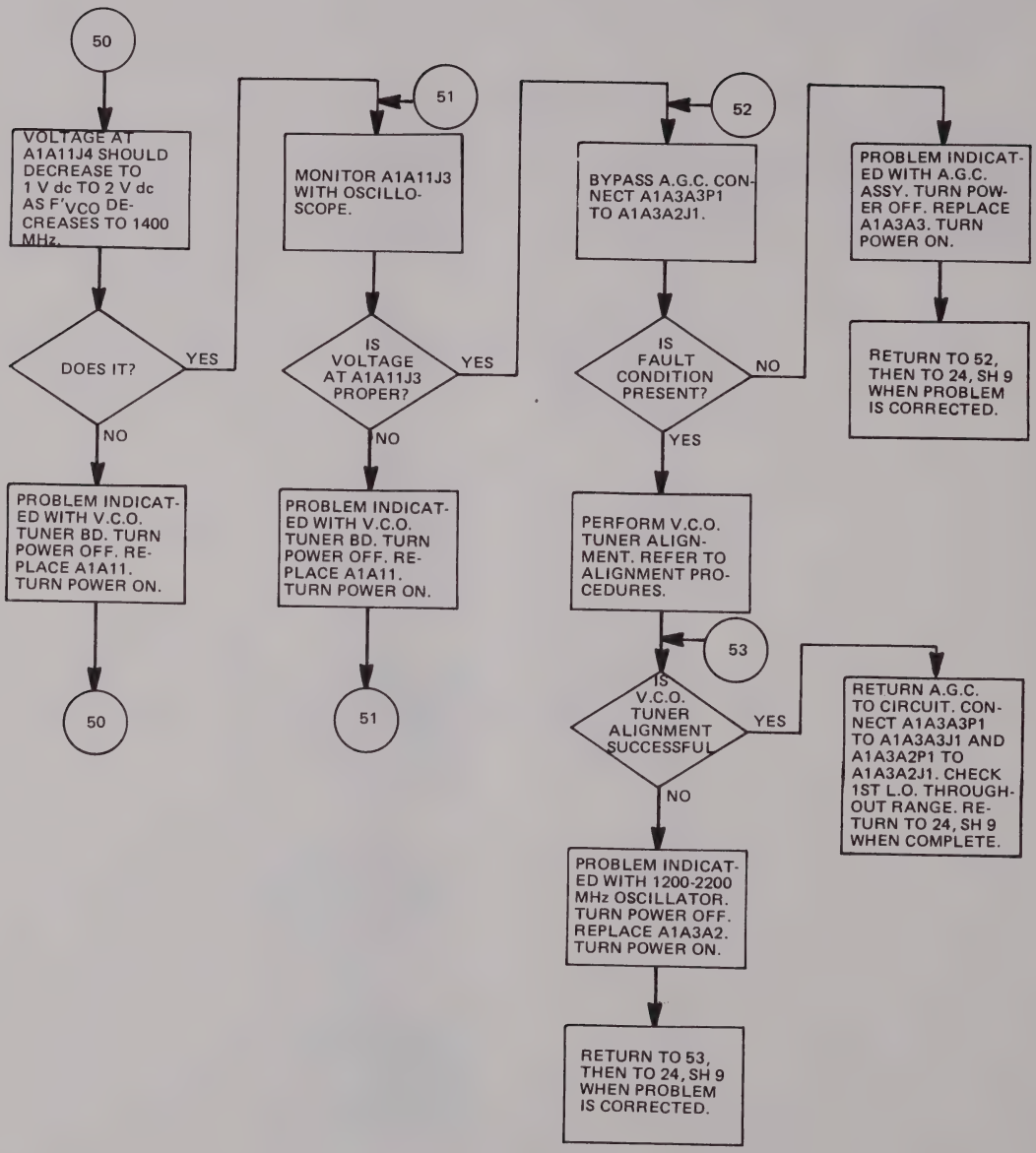
50
VOLTAGE AT A1A11J4 SHOULD DECREASE TO 1 V dc TO 2 V dc AS F'VCO DECREASES TO 1400 MHz.
DOES IT?
YES
NO
PROBLEM INDICATED WITH V.C.O. TUNER BD. TURN POWER OFF. REPLACE A1A11. TURN POWER ON.
50
51
MONITOR A1A11J3 WITH OSCILLOSCOPE.
IS VOLTAGE AT A1A11J3 PROPER?
YES
NO
PROBLEM INDICATED WITH V.C.O. TUNER BD. TURN POWER OFF. REPLACE A1A11. TURN POWER ON.
51
52
BYPASS A.G.C. CONNECT A1A3A3P1 TO A1A3A2J1.
IS FAULT CONDITION PRESENT?
NO
YES
PROBLEM INDICATED WITH A.G.C. ASSY. TURN POWER OFF. REPLACE A1A3A3. TURN POWER ON.
RETURN TO 52, THEN TO 24, SH 9 WHEN PROBLEM IS CORRECTED.
PERFORM V.C.O. TUNER ALIGNMENT. REFER TO ALIGNMENT PROCEDURES.
53
IS V.C.O. TUNER ALIGNMENT SUCCESSFUL
YES
NO
RETURN A.G.C. TO CIRCUIT. CONNECT A1A3A3P1 TO A1A3A3J1 AND A1A3A2P1 TO A1A3A2J1. CHECK 1ST L.O. THROUGHOUT RANGE. RETURN TO 24, SH 9 WHEN COMPLETE.
PROBLEM INDICATED WITH 1200-2200 MHz OSCILLATOR. TURN POWER OFF. REPLACE A1A3A2. TURN POWER ON.
RETURN TO 53, THEN TO 24, SH 9 WHEN PROBLEM IS CORRECTED.

Figure 5-8. RF signal generator troubleshooting (sheet 19 of 19)

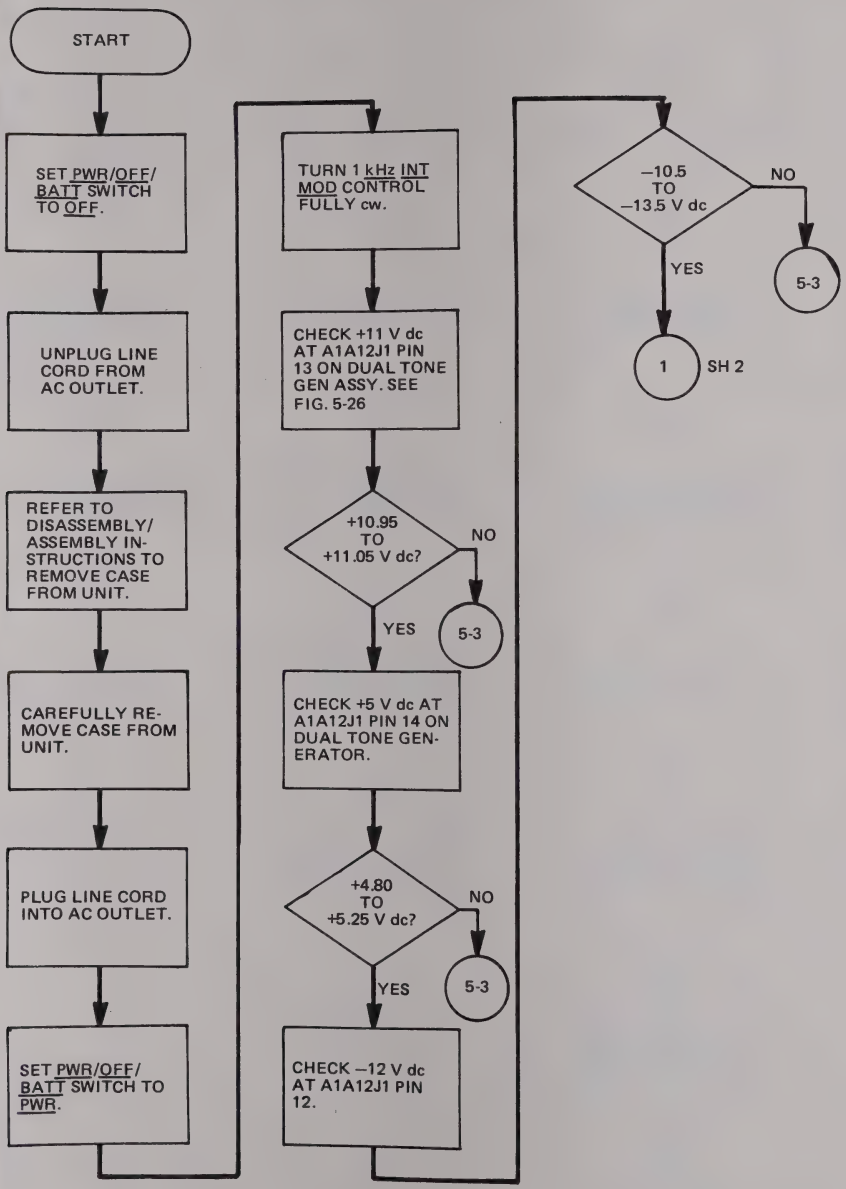
START
SET PWR/OFF/ BATT SWITCH TO OFF.
UNPLUG LINE CORD FROM AC OUTLET.
REFER TO DISASSEMBLY/ ASSEMBLY IN-STRUCTIONS TO REMOVE CASE FROM UNIT.
CAREFULLY RE-MOVE CASE FROM UNIT.
PLUG LINE CORD INTO AC OUTLET.
SET PWR/OFF/ BATT SWITCH TO PWR.
TURN 1 kHz INT MOD CONTROL FULLY cw.
CHECK +11 V dc AT A1A12J1 PIN 13 ON DUAL TONE GEN ASSY. SEE FIG. 5-26
+10.95 TO +11.05 V dc?
NO
YES
5-3
CHECK +5 V dc AT A1A12J1 PIN 14 ON DUAL TONE GEN-ERATOR.
+4.80 TO +5.25 V dc?
NO
YES
5-3
CHECK –12 V dc AT A1A12J1 PIN 12.
–10.5 TO –13.5 V dc
NO
YES
5-3
1
SH 2

Figure 5-9. Dual tone generator - troubleshooting (sheet 1 of 3)

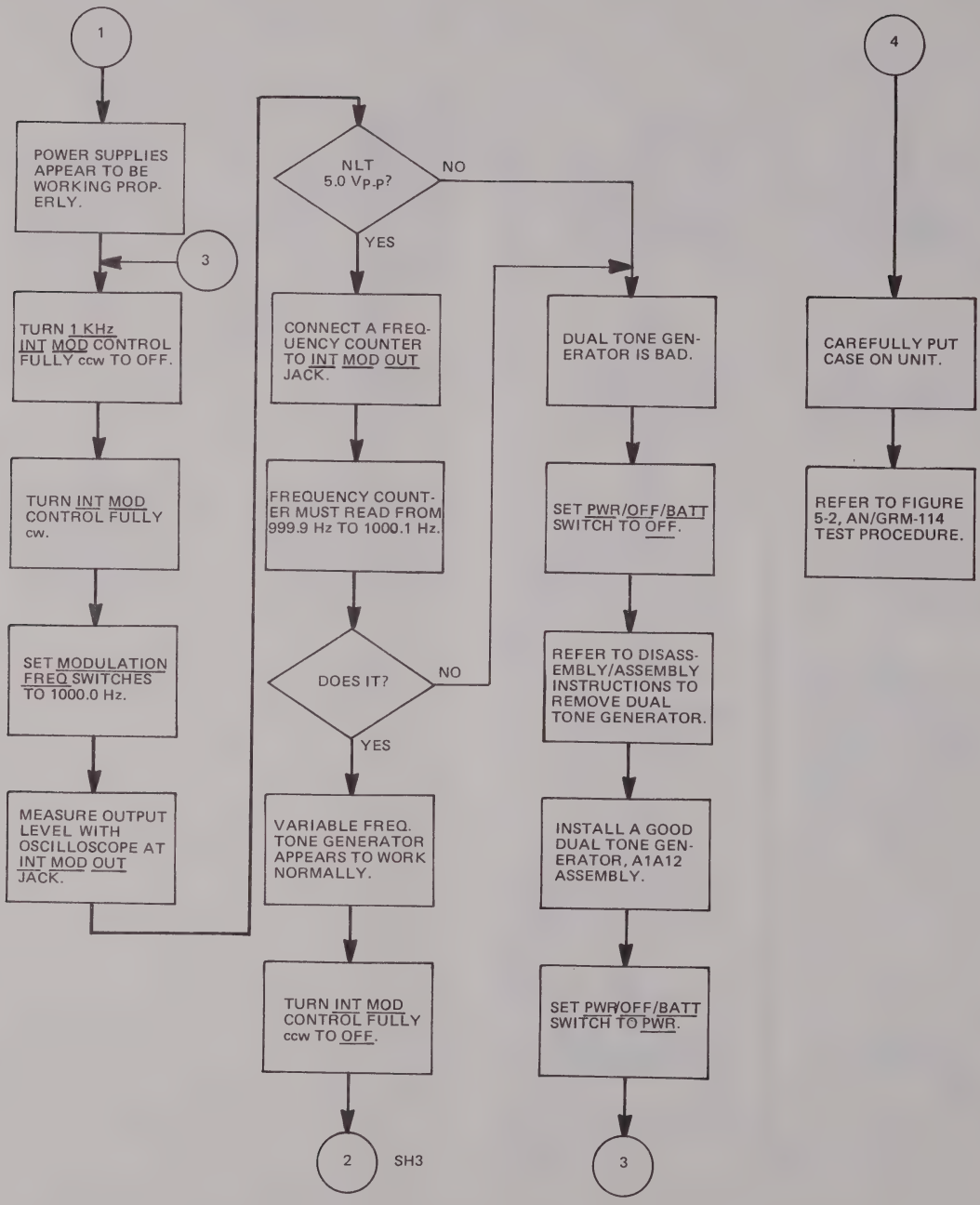
1
POWER SUPPLIES APPEAR TO BE WORKING PROPERLY.
3
TURN 1 KHz INT MOD CONTROL FULLY ccw TO OFF.
TURN INT MOD CONTROL FULLY cw.
SET MODULATION FREQ SWITCHES TO 1000.0 Hz.
MEASURE OUTPUT LEVEL WITH OSCILLOSCOPE AT INT MOD OUT JACK.
NLT 5.0 Vp-p?
NO
YES
CONNECT A FREQUENCY COUNTER TO INT MOD OUT JACK.
FREQUENCY COUNTER MUST READ FROM 999.9 Hz TO 1000.1 Hz.
DOES IT?
NO
YES
VARIABLE FREQ. TONE GENERATOR APPEARS TO WORK NORMALLY.
TURN INT MOD CONTROL FULLY ccw TO OFF.
2
SH3
DUAL TONE GENERATOR IS BAD.
SET PWR/OFF/BATT SWITCH TO OFF.
REFER TO DISASSEMBLY/ASSEMBLY INSTRUCTIONS TO REMOVE DUAL TONE GENERATOR.
INSTALL A GOOD DUAL TONE GENERATOR, A1A12 ASSEMBLY.
SET PWR/OFF/BATT SWITCH TO PWR.
3
4
CAREFULLY PUT CASE ON UNIT.
REFER TO FIGURE 5-2, AN/GRM-114 TEST PROCEDURE.

Figure 5-9. Dual tone generator - troubleshooting (sheet 2 of 3)

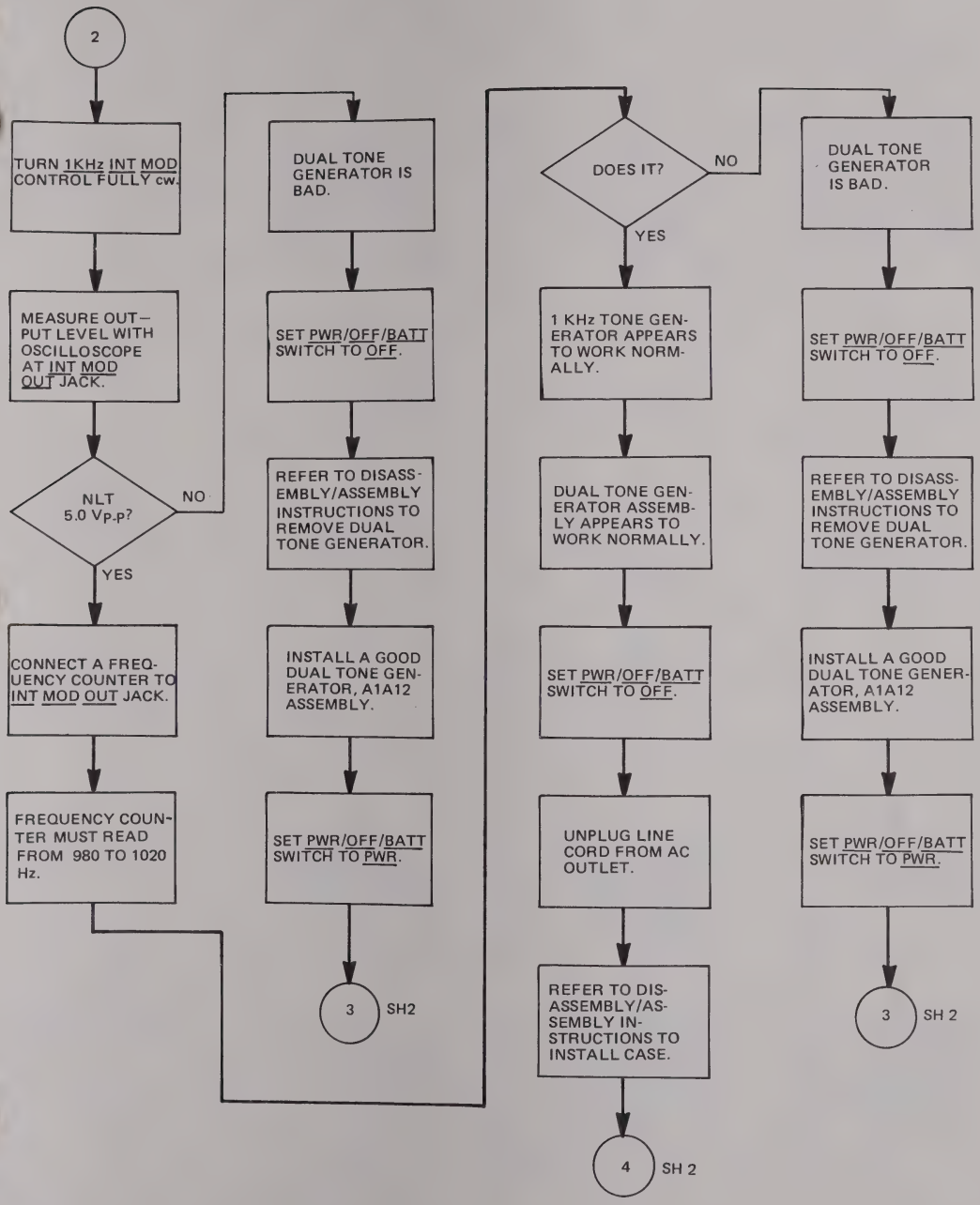
2
TURN 1KHz INT MOD CONTROL FULLY cw.
MEASURE OUTPUT LEVEL WITH OSCILLOSCOPE AT INT MOD OUT JACK.
NLT 5.0 Vp-p?
NO
YES
CONNECT A FREQUENCY COUNTER TO INT MOD OUT JACK.
FREQUENCY COUNTER MUST READ FROM 980 TO 1020 Hz.
DUAL TONE GENERATOR IS BAD.
SET PWR/OFF/BATT SWITCH TO OFF.
REFER TO DISASSEMBLY/ASSEMBLY INSTRUCTIONS TO REMOVE DUAL TONE GENERATOR.
INSTALL A GOOD DUAL TONE GENERATOR, A1A12 ASSEMBLY.
SET PWR/OFF/BATT SWITCH TO PWR.
3
SH2
DOES IT?
NO
YES
1 KHz TONE GENERATOR APPEARS TO WORK NORMALLY.
DUAL TONE GENERATOR ASSEMBLY APPEARS TO WORK NORMALLY.
SET PWR/OFF/BATT SWITCH TO OFF.
UNPLUG LINE CORD FROM AC OUTLET.
REFER TO DISASSEMBLY/ASSEMBLY INSTRUCTIONS TO INSTALL CASE.
4
SH 2
DUAL TONE GENERATOR IS BAD.
SET PWR/OFF/BATT SWITCH TO OFF.
REFER TO DISASSEMBLY/ASSEMBLY INSTRUCTIONS TO REMOVE DUAL TONE GENERATOR.
INSTALL A GOOD DUAL TONE GENERATOR, A1A12 ASSEMBLY.
SET PWR/OFF/BATT SWITCH TO PWR.
3
SH 2

Figure 5-9. Dual tone generator - troubleshooting (sheet 3 of 3)

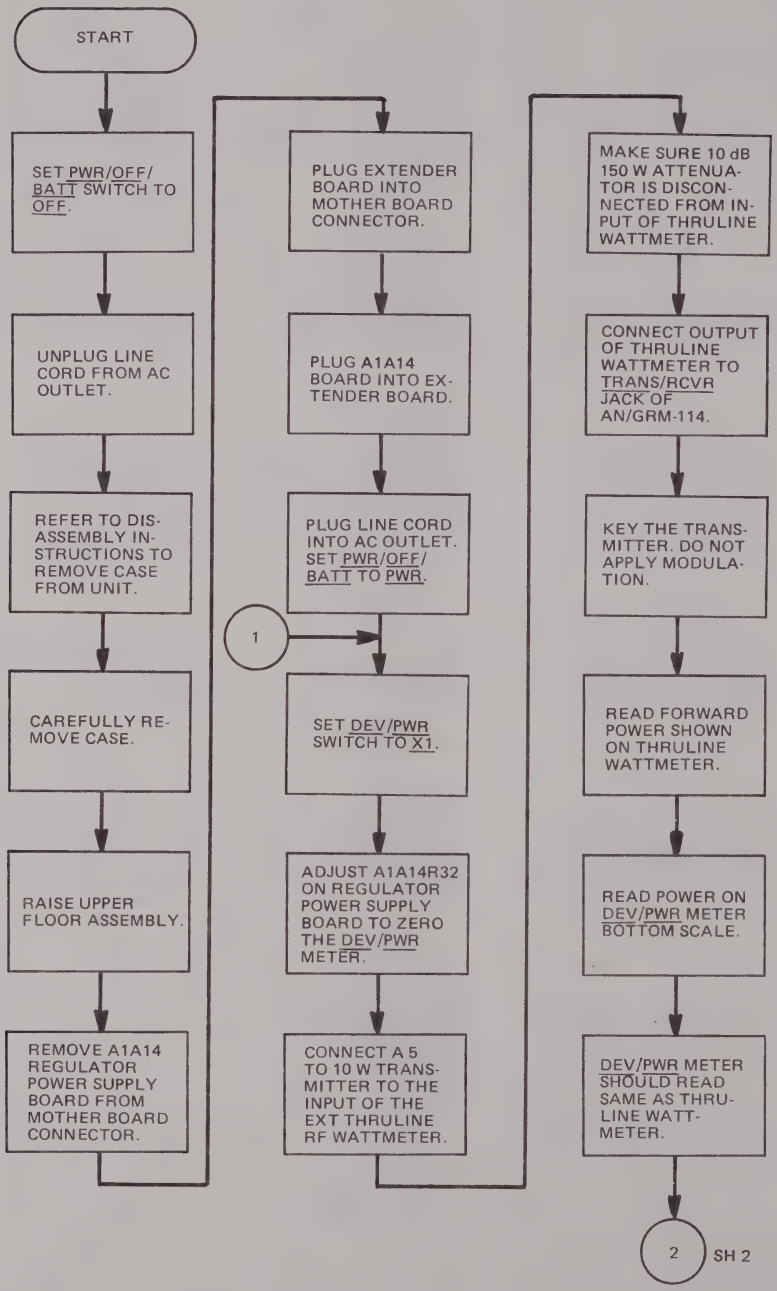
START
SET PWR/OFF/ BATT SWITCH TO OFF.
UNPLUG LINE CORD FROM AC OUTLET.
REFER TO DISASSEMBLY INSTRUCTIONS TO REMOVE CASE FROM UNIT.
CAREFULLY REMOVE CASE.
RAISE UPPER FLOOR ASSEMBLY.
REMOVE A1A14 REGULATOR POWER SUPPLY BOARD FROM MOTHER BOARD CONNECTOR.
PLUG EXTENDER BOARD INTO MOTHER BOARD CONNECTOR.
PLUG A1A14 BOARD INTO EXTENDER BOARD.
PLUG LINE CORD INTO AC OUTLET. SET PWR/OFF/ BATT TO PWR.
1
SET DEV/PWR SWITCH TO X1.
ADJUST A1A14R32 ON REGULATOR POWER SUPPLY BOARD TO ZERO THE DEV/PWR METER.
CONNECT A 5 TO 10 W TRANSMITTER TO THE INPUT OF THE EXT THRULINE RF WATTMETER.
MAKE SURE 10 dB 150 W ATTENUATOR IS DISCONNECTED FROM INPUT OF THRULINE WATTMETER.
CONNECT OUTPUT OF THRULINE WATTMETER TO TRANS/RCVR JACK OF AN/GRM-114.
KEY THE TRANSMITTER. DO NOT APPLY MODULATION.
READ FORWARD POWER SHOWN ON THRULINE WATTMETER.
READ POWER ON DEV/PWR METER BOTTOM SCALE.
DEV/PWR METER SHOULD READ SAME AS THRULINE WATTMETER.
2
SH 2

Figure 5-10. RF wattmeter troubleshooting (sheet 1 of 4)

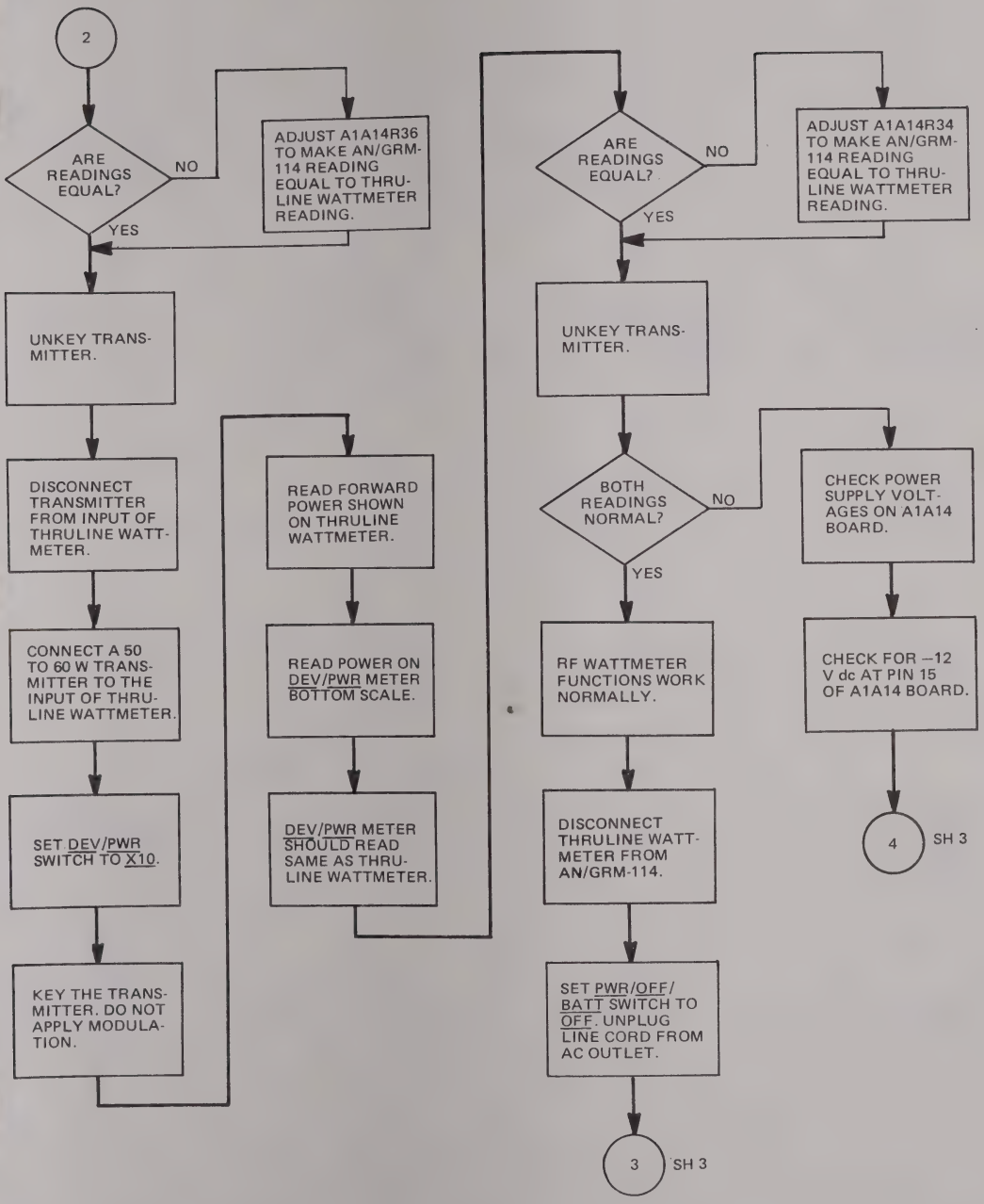
2
ARE READINGS EQUAL?
NO
YES
ADJUST A1A14R36 TO MAKE AN/GRM-114 READING EQUAL TO THRU-LINE WATTMETER READING.
UNKEY TRANS-MITTER.
DISCONNECT TRANSMITTER FROM INPUT OF THRULINE WATT-METER.
CONNECT A 50 TO 60 W TRANS-MITTER TO THE INPUT OF THRU-LINE WATTMETER.
SET DEV/PWR SWITCH TO X10.
KEY THE TRANS-MITTER. DO NOT APPLY MODULA-TION.
READ FORWARD POWER SHOWN ON THRULINE WATTMETER.
READ POWER ON DEV/PWR METER BOTTOM SCALE.
DEV/PWR METER SHOULD READ SAME AS THRU-LINE WATTMETER.
ARE READINGS EQUAL?
NO
YES
ADJUST A1A14R34 TO MAKE AN/GRM-114 READING EQUAL TO THRU-LINE WATTMETER READING.
UNKEY TRANS-MITTER.
BOTH READINGS NORMAL?
NO
YES
CHECK POWER SUPPLY VOLT-AGES ON A1A14 BOARD.
CHECK FOR –12 V dc AT PIN 15 OF A1A14 BOARD.
4
SH 3
RF WATTMETER FUNCTIONS WORK NORMALLY.
DISCONNECT THRULINE WATT-METER FROM AN/GRM-114.
SET PWR/OFF/BATT SWITCH TO OFF. UNPLUG LINE CORD FROM AC OUTLET.
3
SH 3

Figure 5-10. RF wattmeter troubleshooting (sheet 2 of 4)

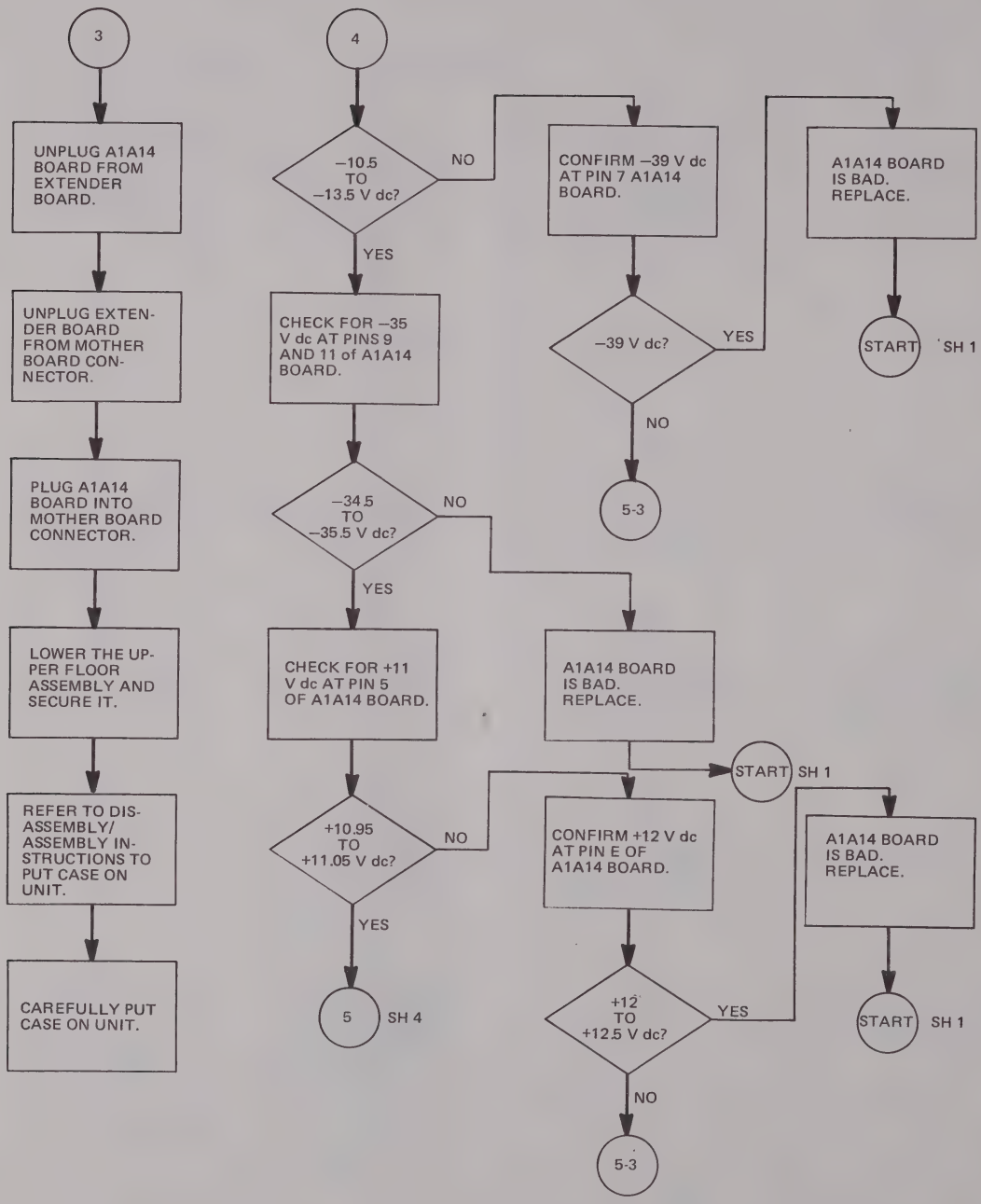
3
UNPLUG A1A14 BOARD FROM EXTENDER BOARD.
UNPLUG EXTENDER BOARD FROM MOTHER BOARD CONNECTOR.
PLUG A1A14 BOARD INTO MOTHER BOARD CONNECTOR.
LOWER THE UPPER FLOOR ASSEMBLY AND SECURE IT.
REFER TO DISASSEMBLY/ ASSEMBLY INSTRUCTIONS TO PUT CASE ON UNIT.
CAREFULLY PUT CASE ON UNIT.
4
−10.5 TO −13.5 V dc?
NO
YES
CONFIRM −39 V dc AT PIN 7 A1A14 BOARD.
A1A14 BOARD IS BAD. REPLACE.
START SH 1
−39 V dc?
YES
NO
5-3
CHECK FOR −35 V dc AT PINS 9 AND 11 of A1A14 BOARD.
−34.5 TO −35.5 V dc?
NO
YES
CHECK FOR +11 V dc AT PIN 5 OF A1A14 BOARD.
A1A14 BOARD IS BAD. REPLACE.
START SH 1
+10.95 TO +11.05 V dc?
NO
YES
5 SH 4
CONFIRM +12 V dc AT PIN E OF A1A14 BOARD.
A1A14 BOARD IS BAD. REPLACE.
+12 TO +12.5 V dc?
YES
NO
START SH 1
5-3

Figure 5-10. RF wattmeter troubleshooting (sheet 3 of 4)

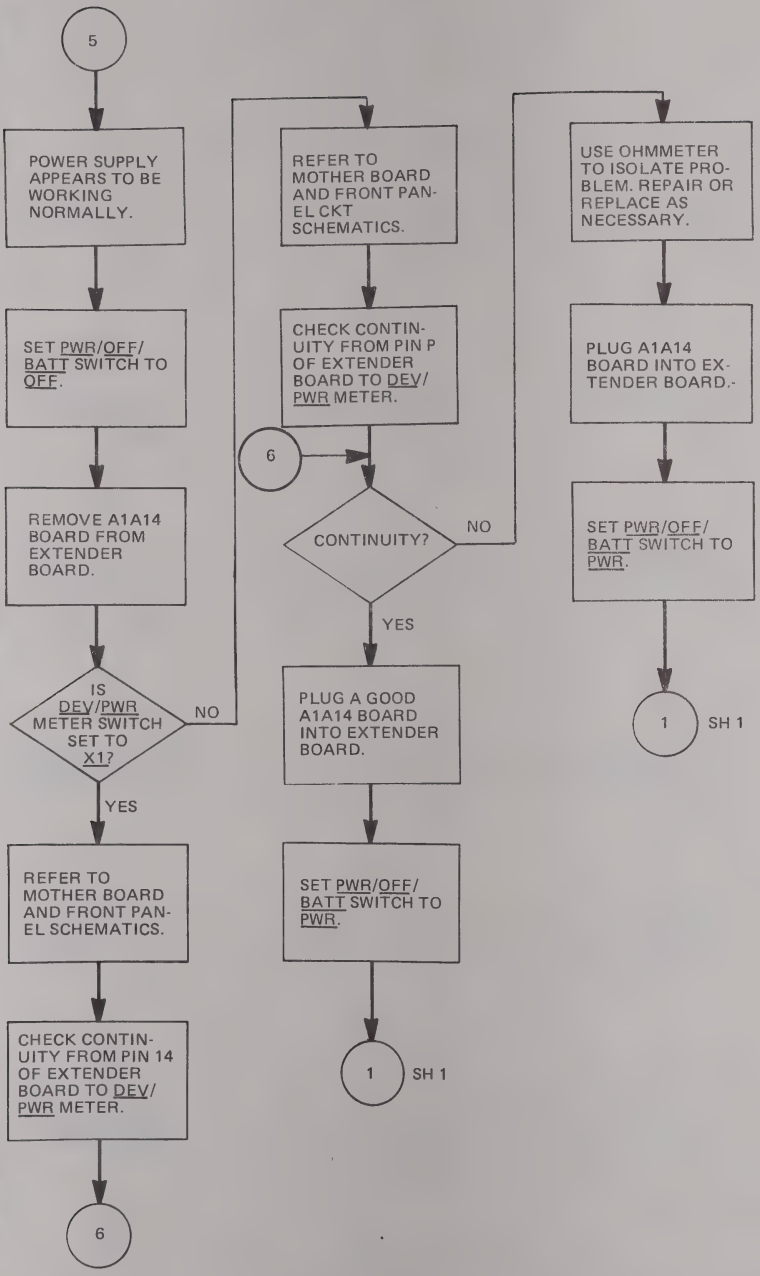
5
POWER SUPPLY APPEARS TO BE WORKING NORMALLY.
SET PWR/OFF/ BATT SWITCH TO OFF.
REMOVE A1A14 BOARD FROM EXTENDER BOARD.
IS DEV/PWR METER SWITCH SET TO X1?
NO
YES
REFER TO MOTHER BOARD AND FRONT PANEL SCHEMATICS.
CHECK CONTINUITY FROM PIN 14 OF EXTENDER BOARD TO DEV/ PWR METER.
6
REFER TO MOTHER BOARD AND FRONT PANEL CKT SCHEMATICS.
CHECK CONTINUITY FROM PIN P OF EXTENDER BOARD TO DEV/ PWR METER.
6
CONTINUITY?
NO
YES
PLUG A GOOD A1A14 BOARD INTO EXTENDER BOARD.
SET PWR/OFF/ BATT SWITCH TO PWR.
1 SH 1
USE OHMMETER TO ISOLATE PROBLEM. REPAIR OR REPLACE AS NECESSARY.
PLUG A1A14 BOARD INTO EXTENDER BOARD.
SET PWR/OFF/ BATT SWITCH TO PWR.
1 SH 1

Figure 5-10. RF wattmeter troubleshooting (sheet 4 of 4)

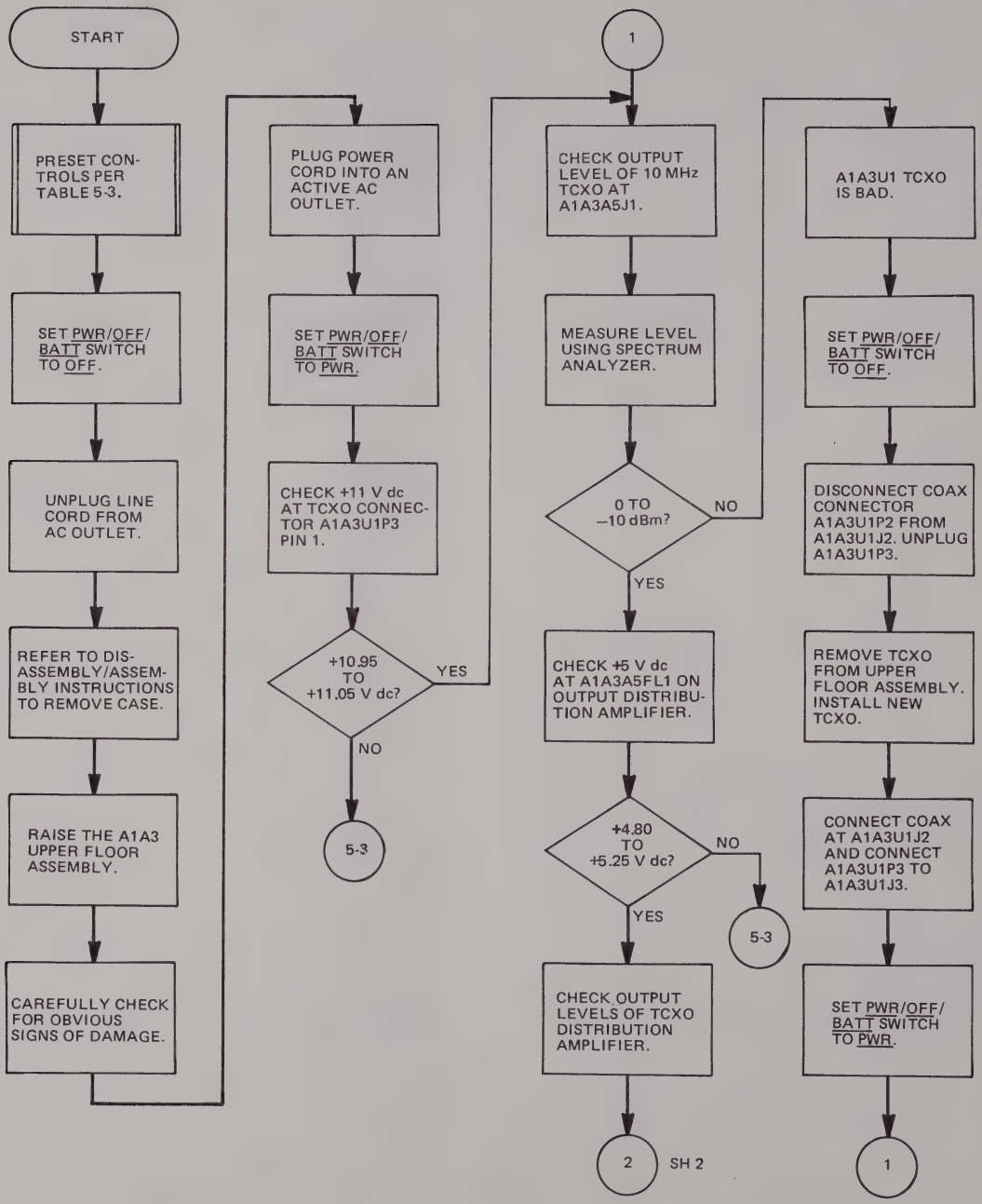
START
PRESET CONTROLS PER TABLE 5-3.
SET PWR/OFF/BATT SWITCH TO OFF.
UNPLUG LINE CORD FROM AC OUTLET.
REFER TO DISASSEMBLY/ASSEMBLY INSTRUCTIONS TO REMOVE CASE.
RAISE THE A1A3 UPPER FLOOR ASSEMBLY.
CAREFULLY CHECK FOR OBVIOUS SIGNS OF DAMAGE.
PLUG POWER CORD INTO AN ACTIVE AC OUTLET.
SET PWR/OFF/BATT SWITCH TO PWR.
CHECK +11 V dc AT TCXO CONNECTOR A1A3U1P3 PIN 1.
+10.95 TO +11.05 V dc?
YES
NO
5-3
1
CHECK OUTPUT LEVEL OF 10 MHz TCXO AT A1A3A5J1.
MEASURE LEVEL USING SPECTRUM ANALYZER.
0 TO −10 dBm?
NO
YES
CHECK +5 V dc AT A1A3A5FL1 ON OUTPUT DISTRIBUTION AMPLIFIER.
+4.80 TO +5.25 V dc?
NO
YES
5-3
CHECK OUTPUT LEVELS OF TCXO DISTRIBUTION AMPLIFIER.
2
SH 2
A1A3U1 TCXO IS BAD.
SET PWR/OFF/BATT SWITCH TO OFF.
DISCONNECT COAX CONNECTOR A1A3U1P2 FROM A1A3U1J2. UNPLUG A1A3U1P3.
REMOVE TCXO FROM UPPER FLOOR ASSEMBLY. INSTALL NEW TCXO.
CONNECT COAX AT A1A3U1J2 AND CONNECT A1A3U1P3 TO A1A3U1J3.
SET PWR/OFF/BATT SWITCH TO PWR.
1

Figure 5-11. TCXO and output distribution amplifier troubleshooting (sheet 1 of 4)

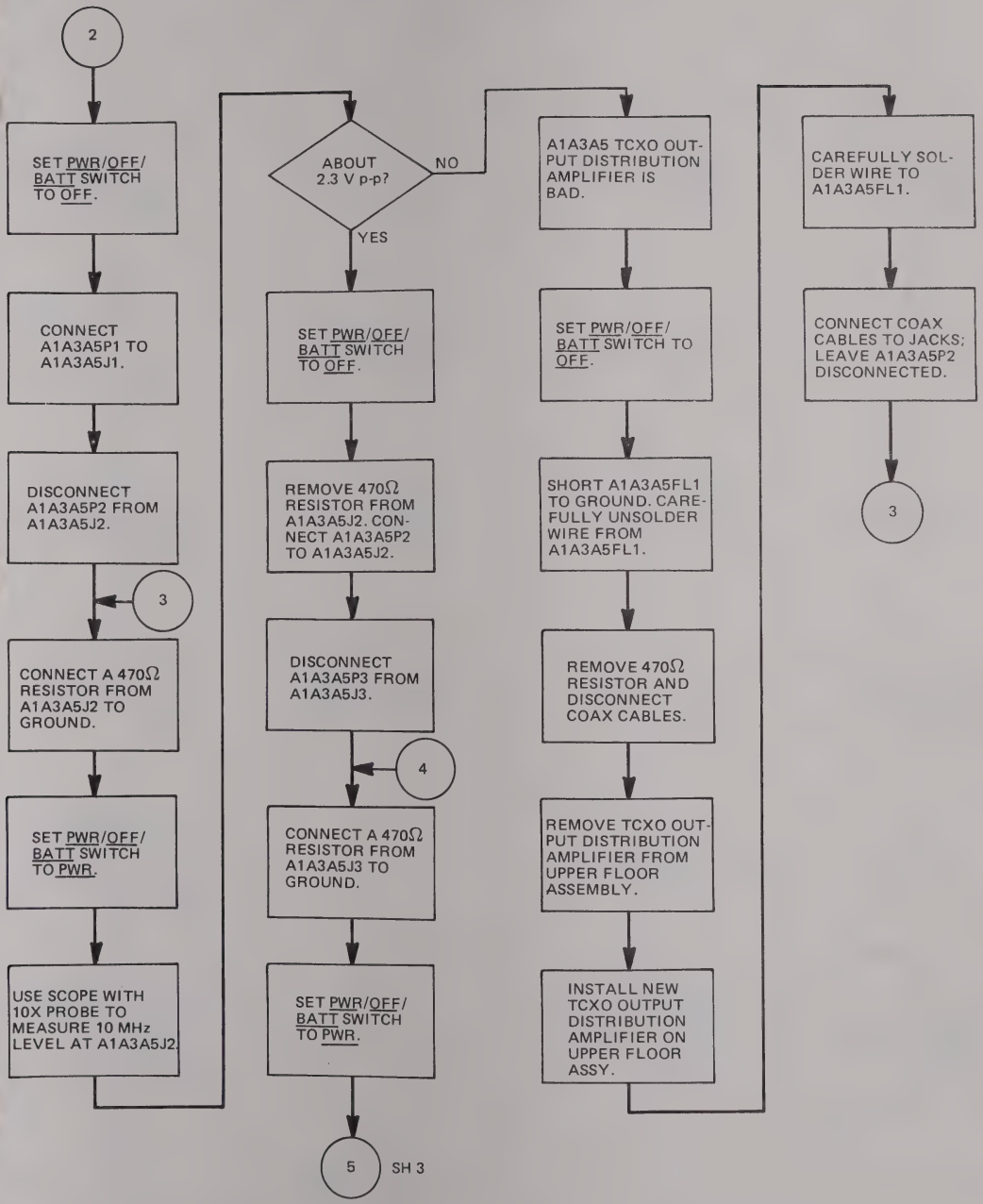
2
SET PWR/OFF/ BATT SWITCH TO OFF.
CONNECT A1A3A5P1 TO A1A3A5J1.
DISCONNECT A1A3A5P2 FROM A1A3A5J2.
3
CONNECT A 470Ω RESISTOR FROM A1A3A5J2 TO GROUND.
SET PWR/OFF/ BATT SWITCH TO PWR.
USE SCOPE WITH 10X PROBE TO MEASURE 10 MHz LEVEL AT A1A3A5J2.
ABOUT 2.3 V p-p?
NO
YES
SET PWR/OFF/ BATT SWITCH TO OFF.
REMOVE 470Ω RESISTOR FROM A1A3A5J2. CONNECT A1A3A5P2 TO A1A3A5J2.
DISCONNECT A1A3A5P3 FROM A1A3A5J3.
4
CONNECT A 470Ω RESISTOR FROM A1A3A5J3 TO GROUND.
SET PWR/OFF/ BATT SWITCH TO PWR.
5
SH 3
A1A3A5 TCXO OUTPUT DISTRIBUTION AMPLIFIER IS BAD.
SET PWR/OFF/ BATT SWITCH TO OFF.
SHORT A1A3A5FL1 TO GROUND. CAREFULLY UNSOLDER WIRE FROM A1A3A5FL1.
REMOVE 470Ω RESISTOR AND DISCONNECT COAX CABLES.
REMOVE TCXO OUTPUT DISTRIBUTION AMPLIFIER FROM UPPER FLOOR ASSEMBLY.
INSTALL NEW TCXO OUTPUT DISTRIBUTION AMPLIFIER ON UPPER FLOOR ASSY.
CAREFULLY SOLDER WIRE TO A1A3A5FL1.
CONNECT COAX CABLES TO JACKS; LEAVE A1A3A5P2 DISCONNECTED.
3

Figure 5-11. TCXO and output distribution amplifier troubleshooting (sheet 2 of 4)

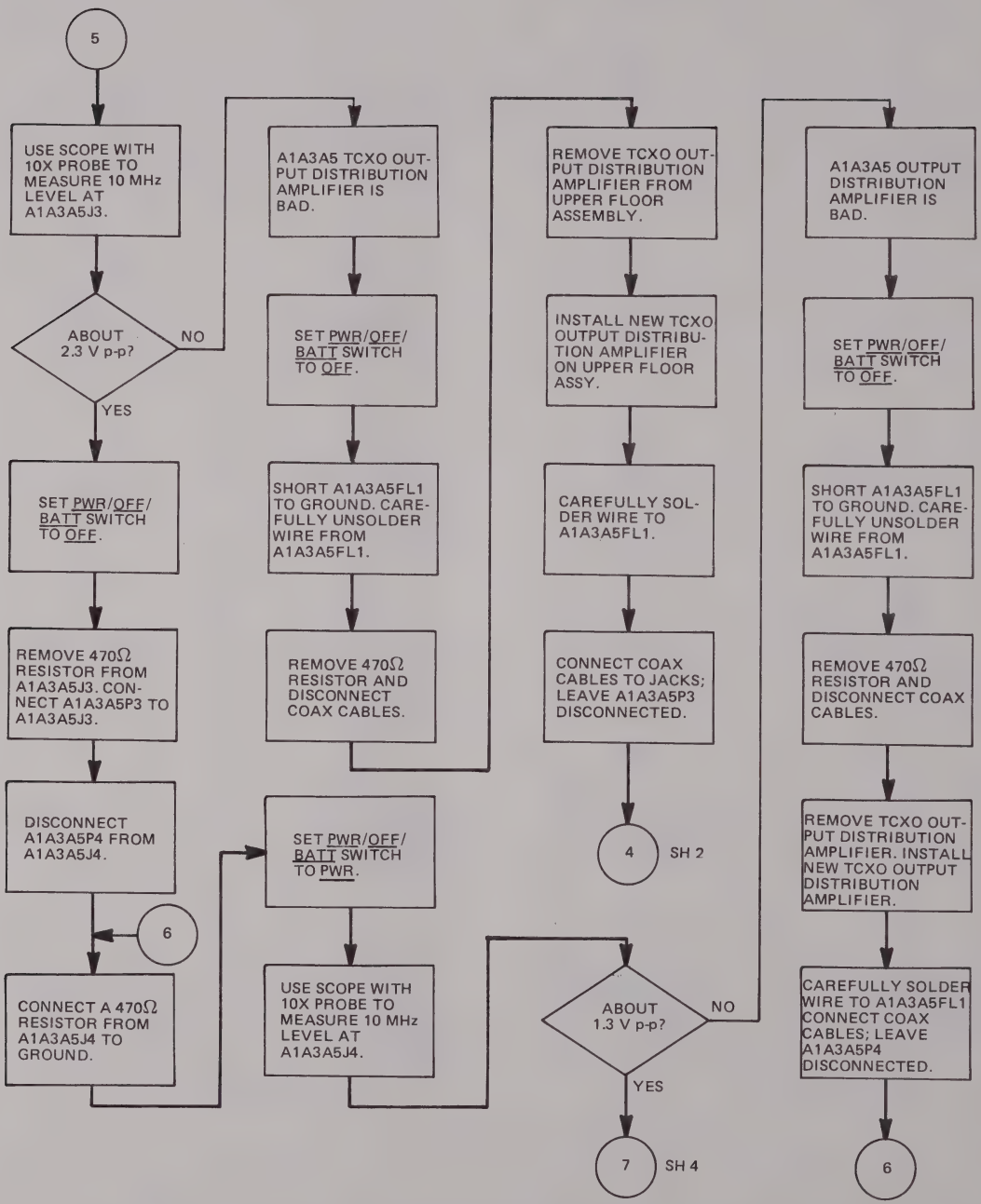
5
USE SCOPE WITH 10X PROBE TO MEASURE 10 MHz LEVEL AT A1A3A5J3.
ABOUT 2.3 V p-p?
NO
YES
SET PWR/OFF/BATT SWITCH TO OFF.
REMOVE 470Ω RESISTOR FROM A1A3A5J3. CONNECT A1A3A5P3 TO A1A3A5J3.
DISCONNECT A1A3A5P4 FROM A1A3A5J4.
6
CONNECT A 470Ω RESISTOR FROM A1A3A5J4 TO GROUND.
A1A3A5 TCXO OUTPUT DISTRIBUTION AMPLIFIER IS BAD.
SET PWR/OFF/BATT SWITCH TO OFF.
SHORT A1A3A5FL1 TO GROUND. CAREFULLY UNSOLDER WIRE FROM A1A3A5FL1.
REMOVE 470Ω RESISTOR AND DISCONNECT COAX CABLES.
SET PWR/OFF/BATT SWITCH TO PWR.
USE SCOPE WITH 10X PROBE TO MEASURE 10 MHz LEVEL AT A1A3A5J4.
REMOVE TCXO OUTPUT DISTRIBUTION AMPLIFIER FROM UPPER FLOOR ASSEMBLY.
INSTALL NEW TCXO OUTPUT DISTRIBUTION AMPLIFIER ON UPPER FLOOR ASSY.
CAREFULLY SOLDER WIRE TO A1A3A5FL1.
CONNECT COAX CABLES TO JACKS; LEAVE A1A3A5P3 DISCONNECTED.
4
SH 2
ABOUT 1.3 V p-p?
NO
YES
7
SH 4
A1A3A5 OUTPUT DISTRIBUTION AMPLIFIER IS BAD.
SET PWR/OFF/BATT SWITCH TO OFF.
SHORT A1A3A5FL1 TO GROUND. CAREFULLY UNSOLDER WIRE FROM A1A3A5FL1.
REMOVE 470Ω RESISTOR AND DISCONNECT COAX CABLES.
REMOVE TCXO OUTPUT DISTRIBUTION AMPLIFIER. INSTALL NEW TCXO OUTPUT DISTRIBUTION AMPLIFIER.
CAREFULLY SOLDER WIRE TO A1A3A5FL1 CONNECT COAX CABLES; LEAVE A1A3A5P4 DISCONNECTED.
6

Figure 5-11. TCXO and output distribution amplifier troubleshooting (sheet 3 of 4)

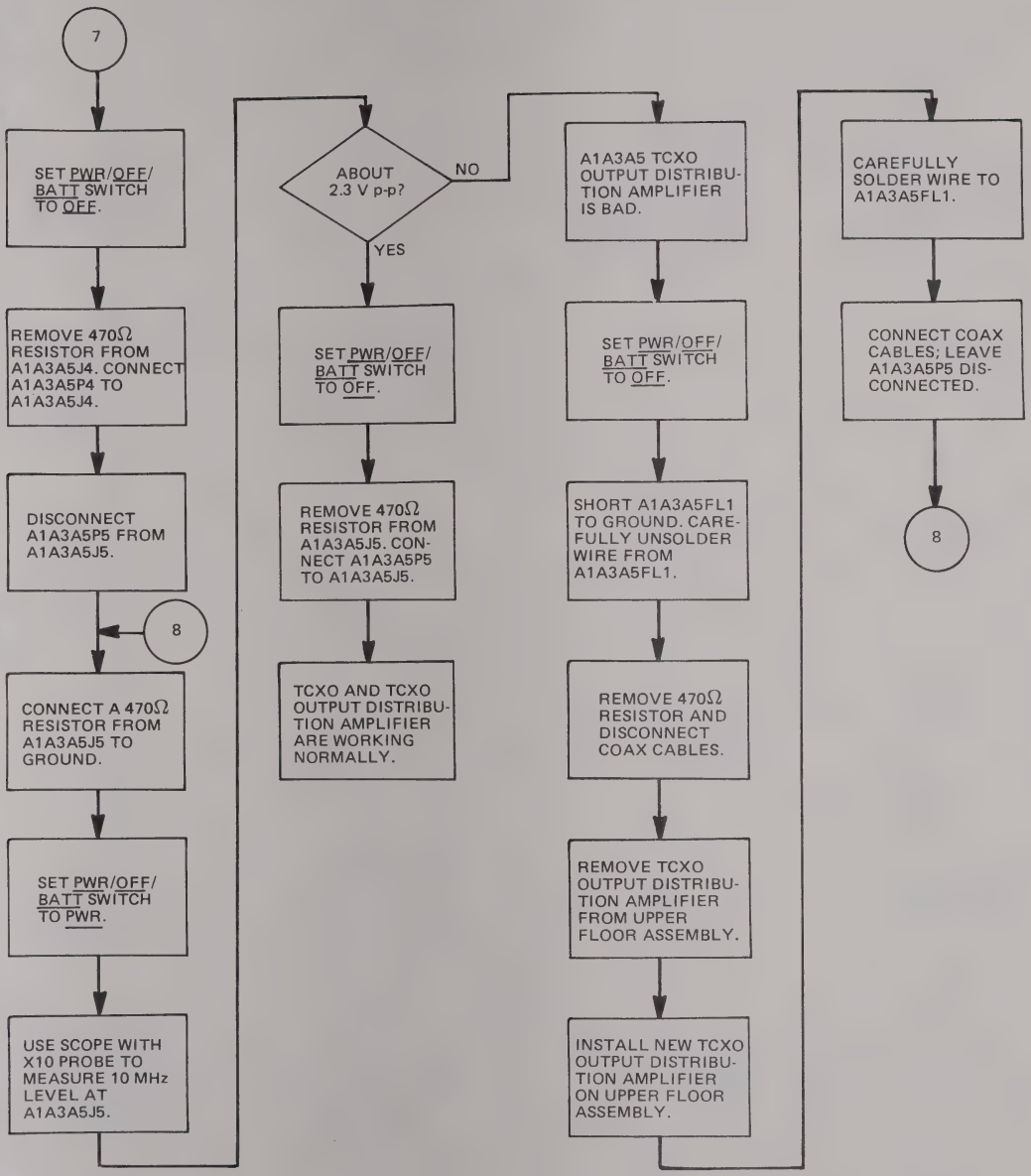
7
SET PWR/OFF/ BATT SWITCH TO OFF.
REMOVE 470Ω RESISTOR FROM A1A3A5J4. CONNECT A1A3A5P4 TO A1A3A5J4.
DISCONNECT A1A3A5P5 FROM A1A3A5J5.
8
CONNECT A 470Ω RESISTOR FROM A1A3A5J5 TO GROUND.
SET PWR/OFF/ BATT SWITCH TO PWR.
USE SCOPE WITH X10 PROBE TO MEASURE 10 MHz LEVEL AT A1A3A5J5.
ABOUT 2.3 V p-p?
NO
YES
SET PWR/OFF/ BATT SWITCH TO OFF.
REMOVE 470Ω RESISTOR FROM A1A3A5J5. CONNECT A1A3A5P5 TO A1A3A5J5.
TCXO AND TCXO OUTPUT DISTRIBUTION AMPLIFIER ARE WORKING NORMALLY.
A1A3A5 TCXO OUTPUT DISTRIBUTION AMPLIFIER IS BAD.
SET PWR/OFF/ BATT SWITCH TO OFF.
SHORT A1A3A5FL1 TO GROUND. CAREFULLY UNSOLDER WIRE FROM A1A3A5FL1.
REMOVE 470Ω RESISTOR AND DISCONNECT COAX CABLES.
REMOVE TCXO OUTPUT DISTRIBUTION AMPLIFIER FROM UPPER FLOOR ASSEMBLY.
INSTALL NEW TCXO OUTPUT DISTRIBUTION AMPLIFIER ON UPPER FLOOR ASSEMBLY.
CAREFULLY SOLDER WIRE TO A1A3A5FL1.
CONNECT COAX CABLES; LEAVE A1A3A5P5 DISCONNECTED.
8

Figure 5-11. TCXO and output distribution amplifier troubleshooting (sheet 4 of 4)

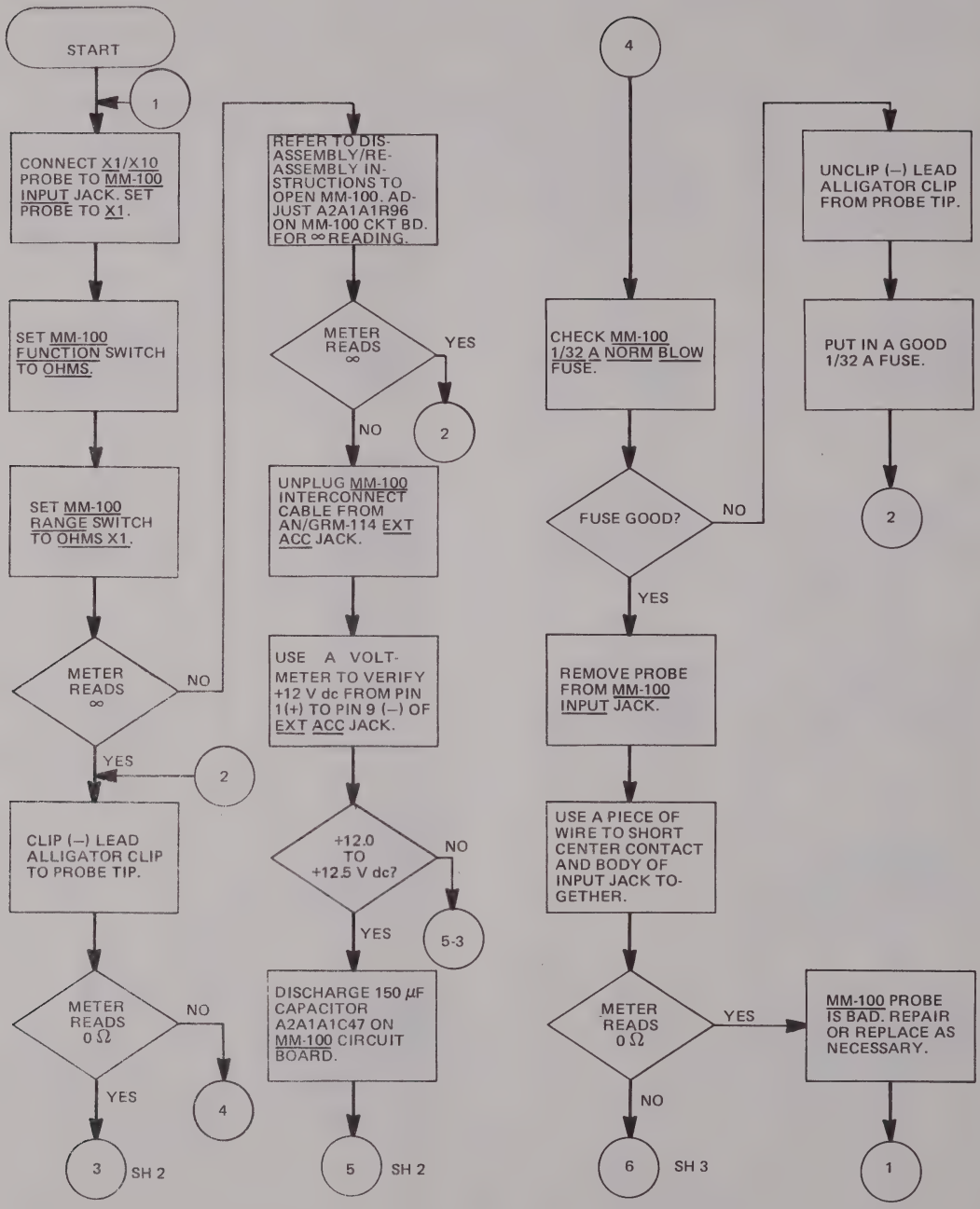
START
1
CONNECT X1/X10 PROBE TO MM-100 INPUT JACK. SET PROBE TO X1.
SET MM-100 FUNCTION SWITCH TO OHMS.
SET MM-100 RANGE SWITCH TO OHMS X1.
METER READS ∞
NO
YES
2
CLIP (–) LEAD ALLIGATOR CLIP TO PROBE TIP.
METER READS 0 Ω
NO
YES
4
3
SH 2
REFER TO DIS-ASSEMBLY/RE-ASSEMBLY IN-STRUCTIONS TO OPEN MM-100. AD-JUST A2A1A1R96 ON MM-100 CKT BD. FOR ∞ READING.
METER READS ∞
YES
NO
2
UNPLUG MM-100 INTERCONNECT CABLE FROM AN/GRM-114 EXT ACC JACK.
USE A VOLT-METER TO VERIFY +12 V dc FROM PIN 1(+) TO PIN 9 (–) OF EXT ACC JACK.
+12.0 TO +12.5 V dc?
NO
YES
5-3
DISCHARGE 150 μF CAPACITOR A2A1A1C47 ON MM-100 CIRCUIT BOARD.
5
SH 2
4
CHECK MM-100 1/32 A NORM BLOW FUSE.
FUSE GOOD?
NO
YES
REMOVE PROBE FROM MM-100 INPUT JACK.
USE A PIECE OF WIRE TO SHORT CENTER CONTACT AND BODY OF INPUT JACK TO-GETHER.
METER READS 0 Ω
YES
NO
6
SH 3
UNCLIP (–) LEAD ALLIGATOR CLIP FROM PROBE TIP.
PUT IN A GOOD 1/32 A FUSE.
2
MM-100 PROBE IS BAD. REPAIR OR REPLACE AS NECESSARY.
1

Figure 5-12. MM-100 multimeter troubleshooting (sheet 1 of 10)

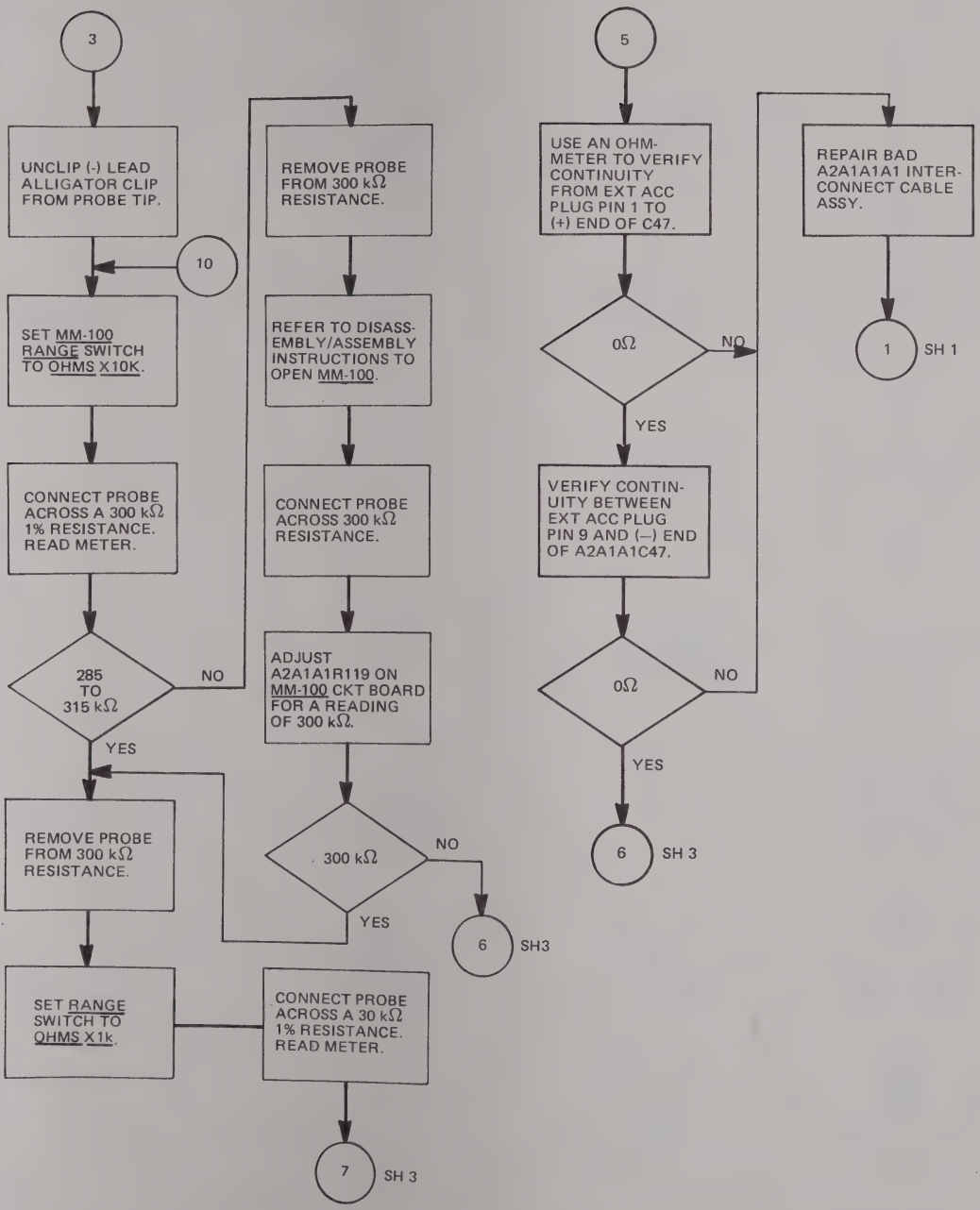
3
UNCLIP (-) LEAD ALLIGATOR CLIP FROM PROBE TIP.
10
SET MM-100 RANGE SWITCH TO OHMS X10K.
CONNECT PROBE ACROSS A 300 kΩ 1% RESISTANCE. READ METER.
285 TO 315 kΩ
NO
YES
REMOVE PROBE FROM 300 kΩ RESISTANCE.
SET RANGE SWITCH TO OHMS X1k.
CONNECT PROBE ACROSS A 30 kΩ 1% RESISTANCE. READ METER.
7
SH 3
REMOVE PROBE FROM 300 kΩ RESISTANCE.
REFER TO DISASS-EMBLY/ASSEMBLY INSTRUCTIONS TO OPEN MM-100.
CONNECT PROBE ACROSS 300 kΩ RESISTANCE.
ADJUST A2A1A1R119 ON MM-100 CKT BOARD FOR A READING OF 300 kΩ.
300 kΩ
NO
YES
6
SH3
5
USE AN OHM-METER TO VERIFY CONTINUITY FROM EXT ACC PLUG PIN 1 TO (+) END OF C47.
0Ω
NO
YES
VERIFY CONTIN-UITY BETWEEN EXT ACC PLUG PIN 9 AND (—) END OF A2A1A1C47.
0Ω
NO
YES
6
SH 3
REPAIR BAD A2A1A1A1 INTER-CONNECT CABLE ASSY.
1
SH 1

Figure 5-12. MM-100 multimeter troubleshooting (sheet 2 of 10)

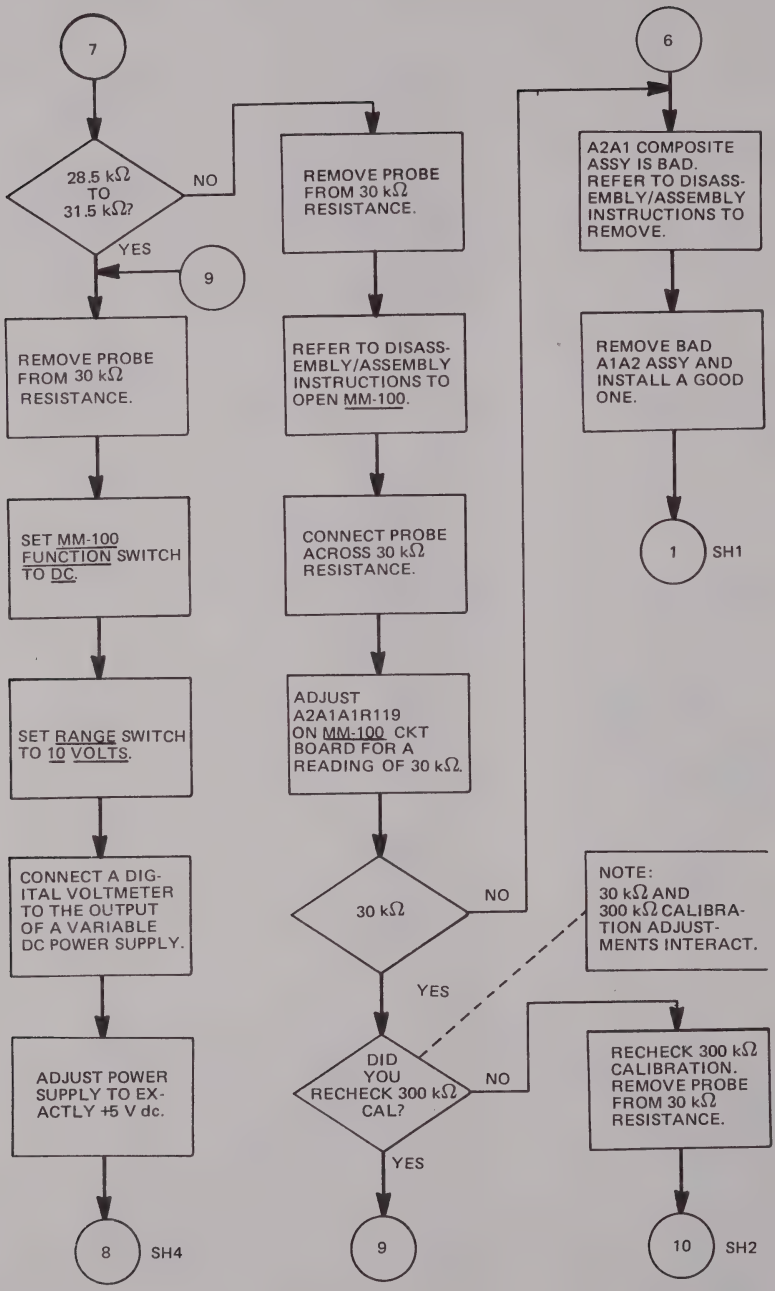
7
28.5 kΩ TO 31.5 kΩ?
NO
YES
9
REMOVE PROBE FROM 30 kΩ RESISTANCE.
SET MM-100 FUNCTION SWITCH TO DC.
SET RANGE SWITCH TO 10 VOLTS.
CONNECT A DIGITAL VOLTMETER TO THE OUTPUT OF A VARIABLE DC POWER SUPPLY.
ADJUST POWER SUPPLY TO EXACTLY +5 V dc.
8
SH4
REMOVE PROBE FROM 30 kΩ RESISTANCE.
REFER TO DISASSEMBLY/ASSEMBLY INSTRUCTIONS TO OPEN MM-100.
CONNECT PROBE ACROSS 30 kΩ RESISTANCE.
ADJUST A2A1A1R119 ON MM-100 CKT BOARD FOR A READING OF 30 kΩ.
30 kΩ
NO
YES
DID YOU RECHECK 300 kΩ CAL?
NO
YES
9
6
A2A1 COMPOSITE ASSY IS BAD. REFER TO DISASSEMBLY/ASSEMBLY INSTRUCTIONS TO REMOVE.
REMOVE BAD A1A2 ASSY AND INSTALL A GOOD ONE.
1
SH1
NOTE:
30 kΩ AND 300 kΩ CALIBRATION ADJUSTMENTS INTERACT.
RECHECK 300 kΩ CALIBRATION. REMOVE PROBE FROM 30 kΩ RESISTANCE.
10
SH2

Figure 5-12. MM-100 multimeter troubleshooting (sheet 3 of 10)

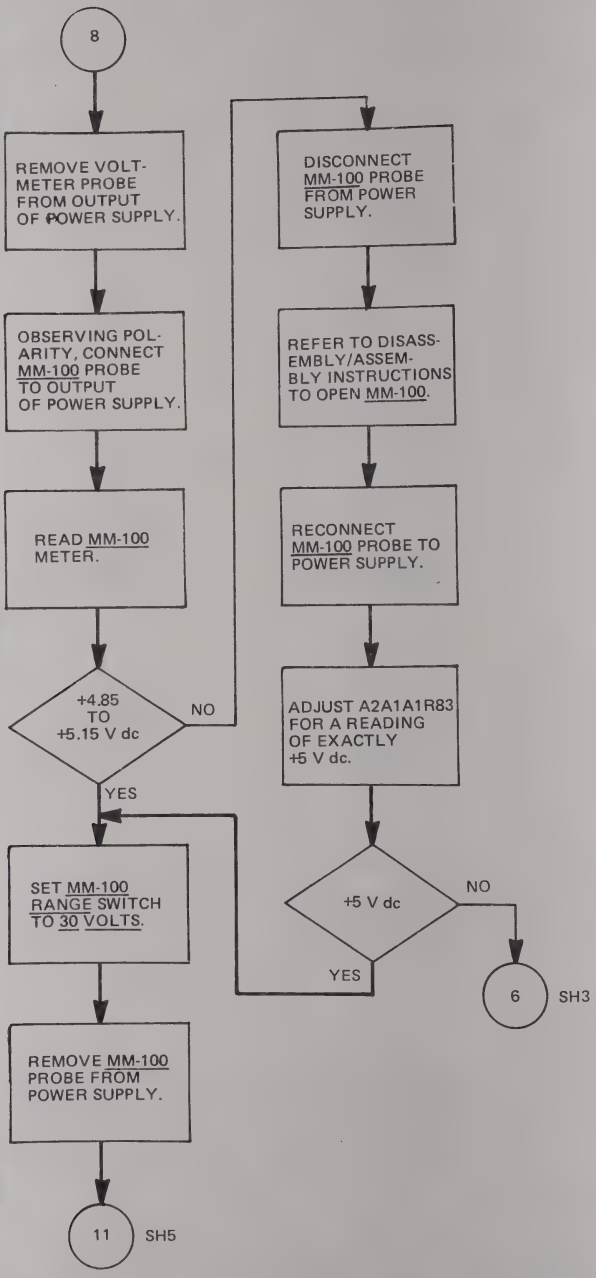
8
REMOVE VOLT-METER PROBE FROM OUTPUT OF POWER SUPPLY.
OBSERVING POL-ARITY, CONNECT MM-100 PROBE TO OUTPUT OF POWER SUPPLY.
READ MM-100 METER.
+4.85 TO +5.15 V dc
NO
YES
SET MM-100 RANGE SWITCH TO 30 VOLTS.
REMOVE MM-100 PROBE FROM POWER SUPPLY.
11
SH5
DISCONNECT MM-100 PROBE FROM POWER SUPPLY.
REFER TO DISASS-EMBLY/ASSEM-BLY INSTRUCTIONS TO OPEN MM-100.
RECONNECT MM-100 PROBE TO POWER SUPPLY.
ADJUST A2A1A1R83 FOR A READING OF EXACTLY +5 V dc.
+5 V dc
NO
YES
6
SH3

Figure 5-12. MM-100 multimeter troubleshooting (sheet 4 of 10)

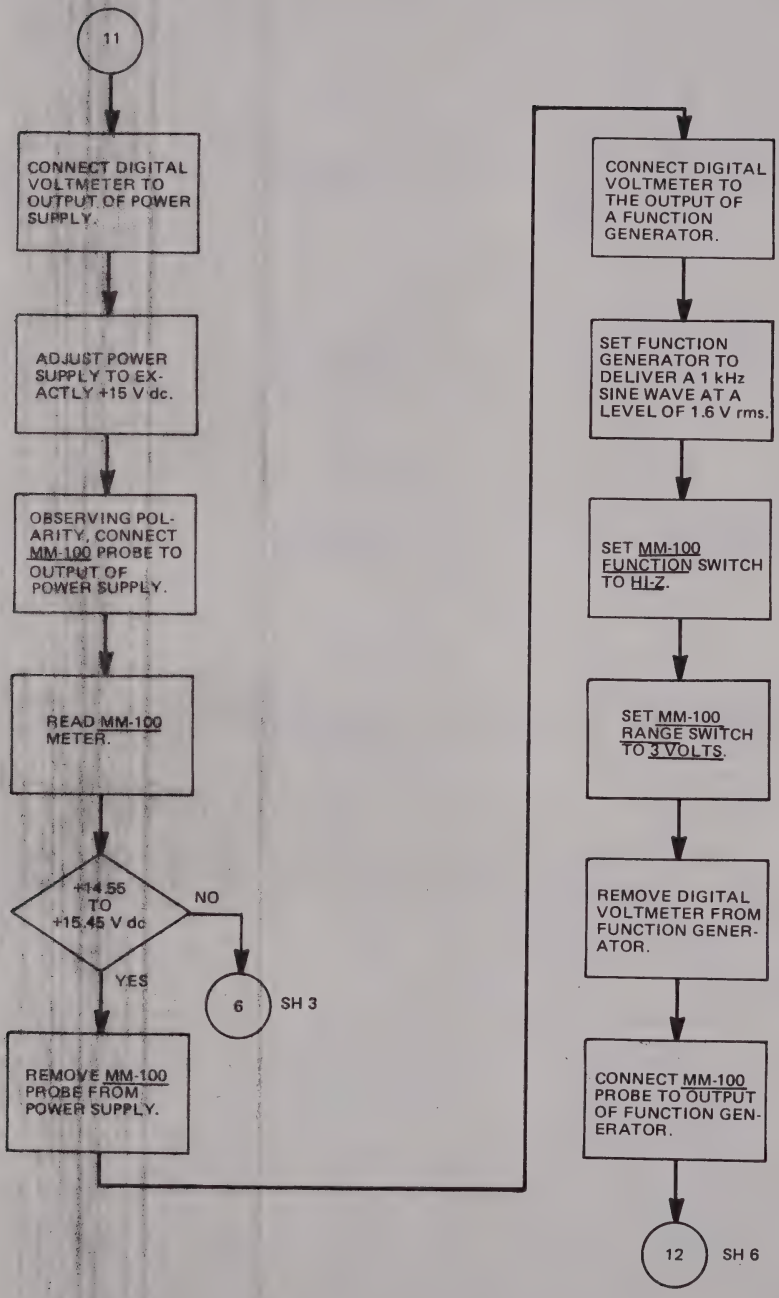
11
CONNECT DIGITAL VOLTMETER TO OUTPUT OF POWER SUPPLY.
ADJUST POWER SUPPLY TO EXACTLY +15 V dc.
OBSERVING POLARITY, CONNECT MM-100 PROBE TO OUTPUT OF POWER SUPPLY.
READ MM-100 METER.
+14.55 TO +15.45 V dc
NO
YES
6
SH 3
REMOVE MM-100 PROBE FROM POWER SUPPLY.
CONNECT DIGITAL VOLTMETER TO THE OUTPUT OF A FUNCTION GENERATOR.
SET FUNCTION GENERATOR TO DELIVER A 1 kHz SINE WAVE AT A LEVEL OF 1.6 V rms.
SET MM-100 FUNCTION SWITCH TO HI-Z.
SET MM-100 RANGE SWITCH TO 3 VOLTS.
REMOVE DIGITAL VOLTMETER FROM FUNCTION GENERATOR.
CONNECT MM-100 PROBE TO OUTPUT OF FUNCTION GENERATOR.
12
SH 6

Figure 5-12. MM-100 multimeter troubleshooting (sheet 5 of 10)

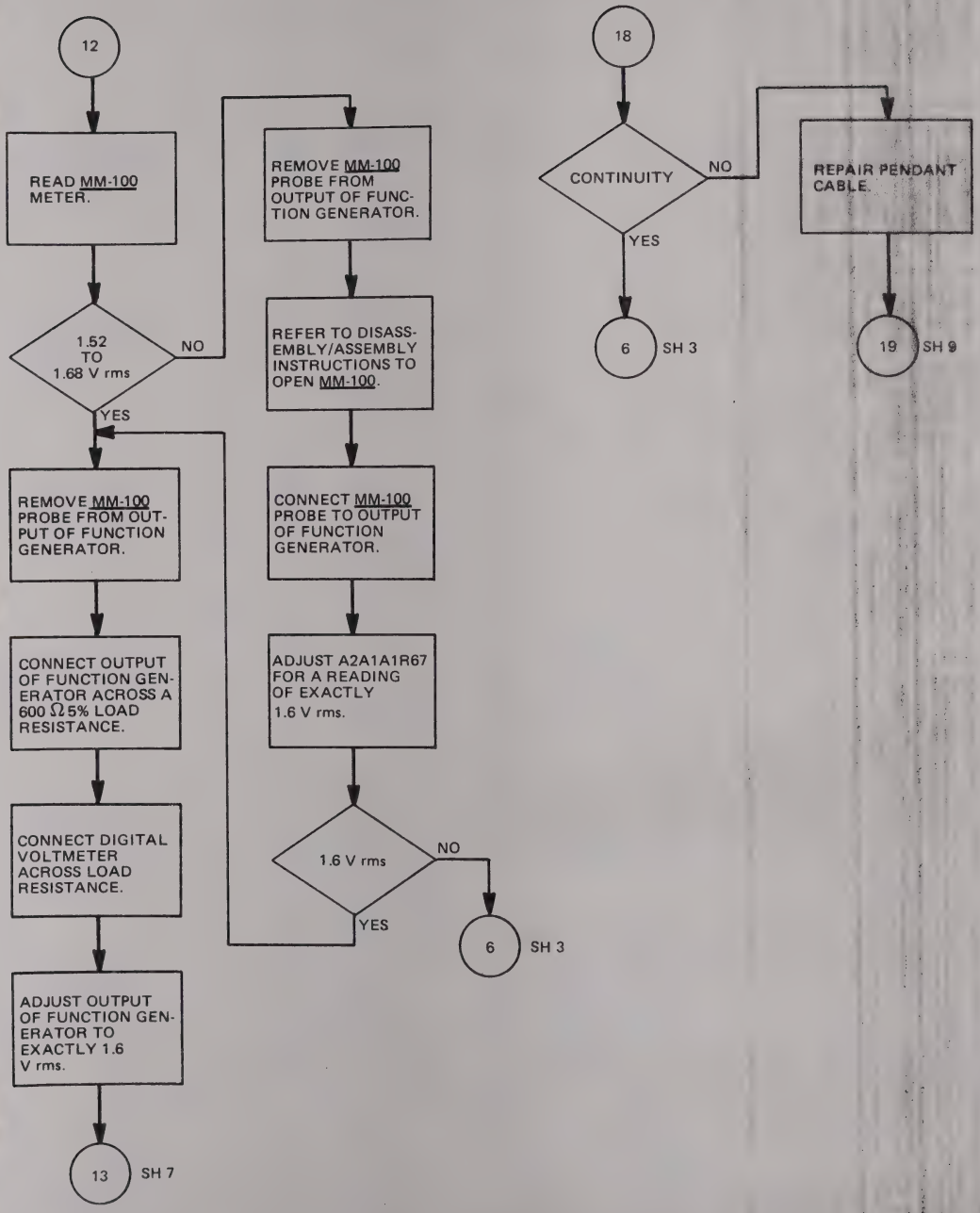

Figure 5-12. MM-100 multimeter troubleshooting (sheet 6 of 10)

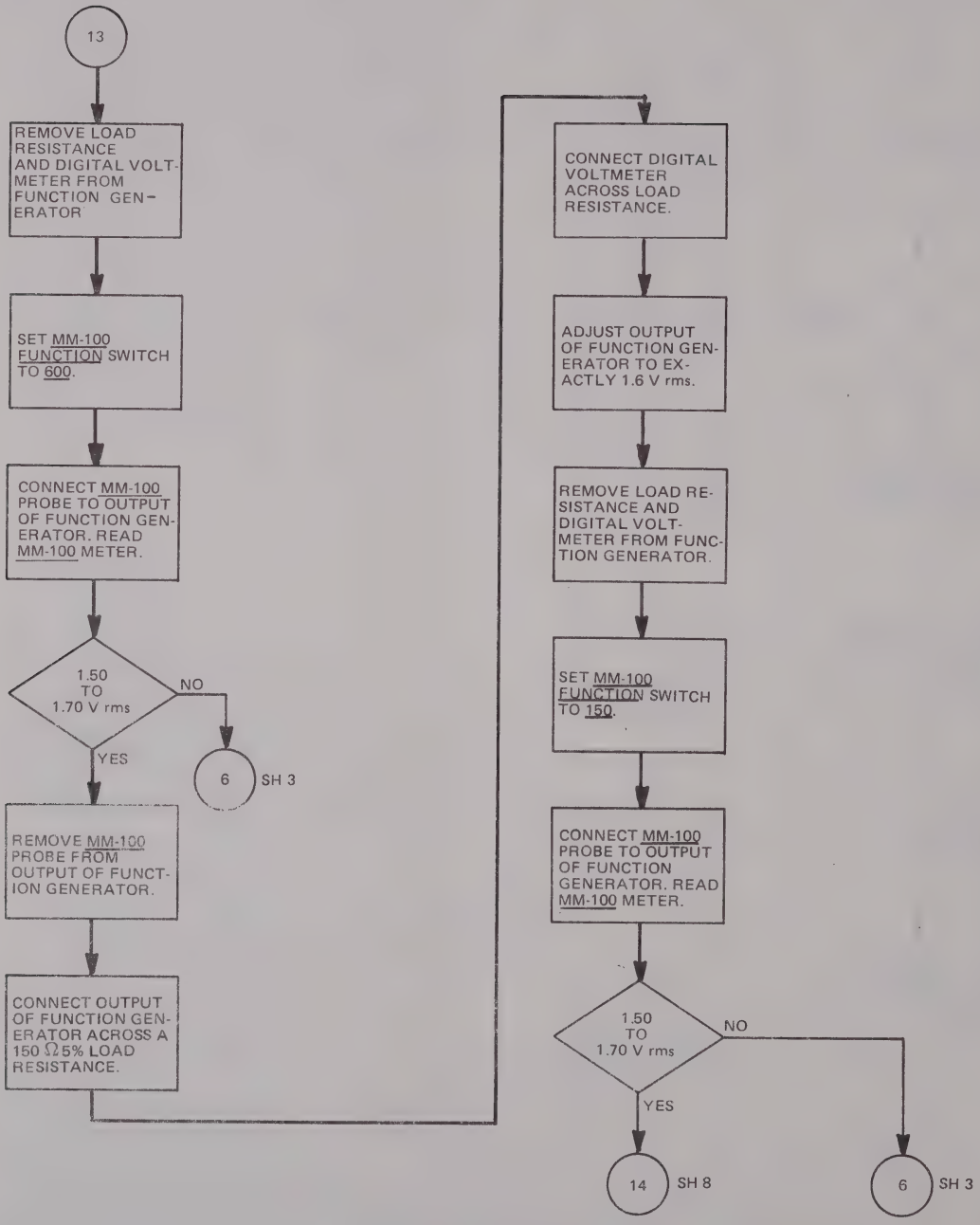
13
REMOVE LOAD RESISTANCE AND DIGITAL VOLTMETER FROM FUNCTION GENERATOR
SET MM-100 FUNCTION SWITCH TO 600.
CONNECT MM-100 PROBE TO OUTPUT OF FUNCTION GENERATOR. READ MM-100 METER.
1.50 TO 1.70 V rms
NO
YES
6
SH 3
REMOVE MM-100 PROBE FROM OUTPUT OF FUNCTION GENERATOR.
CONNECT OUTPUT OF FUNCTION GENERATOR ACROSS A 150 Ω 5% LOAD RESISTANCE.
CONNECT DIGITAL VOLTMETER ACROSS LOAD RESISTANCE.
ADJUST OUTPUT OF FUNCTION GENERATOR TO EXACTLY 1.6 V rms.
REMOVE LOAD RESISTANCE AND DIGITAL VOLTMETER FROM FUNCTION GENERATOR.
SET MM-100 FUNCTION SWITCH TO 150.
CONNECT MM-100 PROBE TO OUTPUT OF FUNCTION GENERATOR. READ MM-100 METER.
1.50 TO 1.70 V rms
NO
YES
14
SH 8
6
SH 3

Figure 5-12. MM-100 multimeter troubleshooting (sheet 7 of 10)

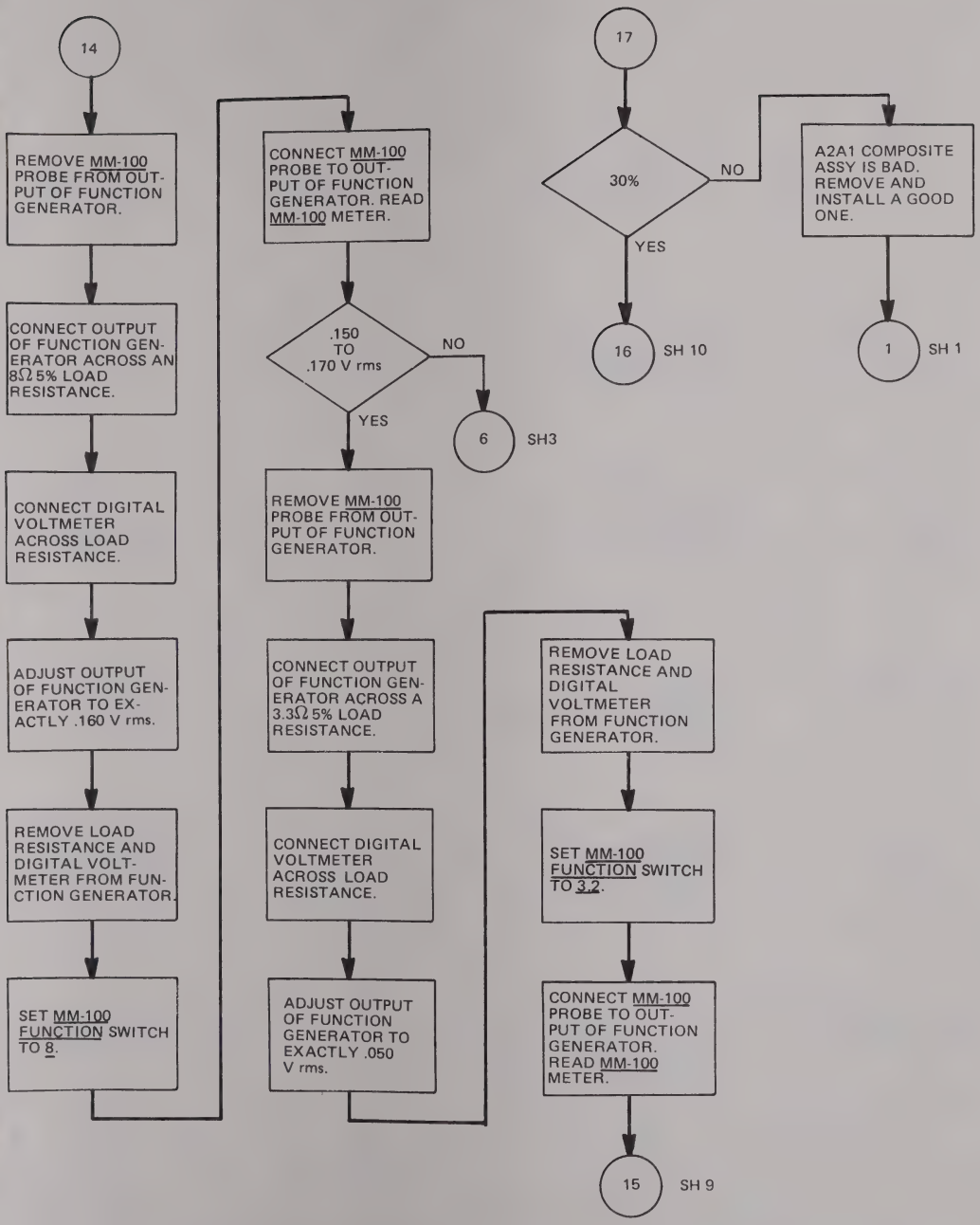
14
REMOVE MM-100 PROBE FROM OUTPUT OF FUNCTION GENERATOR.
CONNECT OUTPUT OF FUNCTION GENERATOR ACROSS AN 8Ω 5% LOAD RESISTANCE.
CONNECT DIGITAL VOLTMETER ACROSS LOAD RESISTANCE.
ADJUST OUTPUT OF FUNCTION GENERATOR TO EXACTLY .160 V rms.
REMOVE LOAD RESISTANCE AND DIGITAL VOLTMETER FROM FUNCTION GENERATOR.
SET MM-100 FUNCTION SWITCH TO 8.
CONNECT MM-100 PROBE TO OUTPUT OF FUNCTION GENERATOR. READ MM-100 METER.
.150 TO .170 V rms
NO
YES
6
SH3
REMOVE MM-100 PROBE FROM OUTPUT OF FUNCTION GENERATOR.
CONNECT OUTPUT OF FUNCTION GENERATOR ACROSS A 3.3Ω 5% LOAD RESISTANCE.
CONNECT DIGITAL VOLTMETER ACROSS LOAD RESISTANCE.
ADJUST OUTPUT OF FUNCTION GENERATOR TO EXACTLY .050 V rms.
REMOVE LOAD RESISTANCE AND DIGITAL VOLTMETER FROM FUNCTION GENERATOR.
SET MM-100 FUNCTION SWITCH TO 3.2.
CONNECT MM-100 PROBE TO OUTPUT OF FUNCTION GENERATOR. READ MM-100 METER.
15
SH 9
17
30%
NO
YES
16
SH 10
A2A1 COMPOSITE ASSY IS BAD. REMOVE AND INSTALL A GOOD ONE.
1
SH 1

Figure 5-12. MM-100 multimeter troubleshooting (sheet 8 of 10)

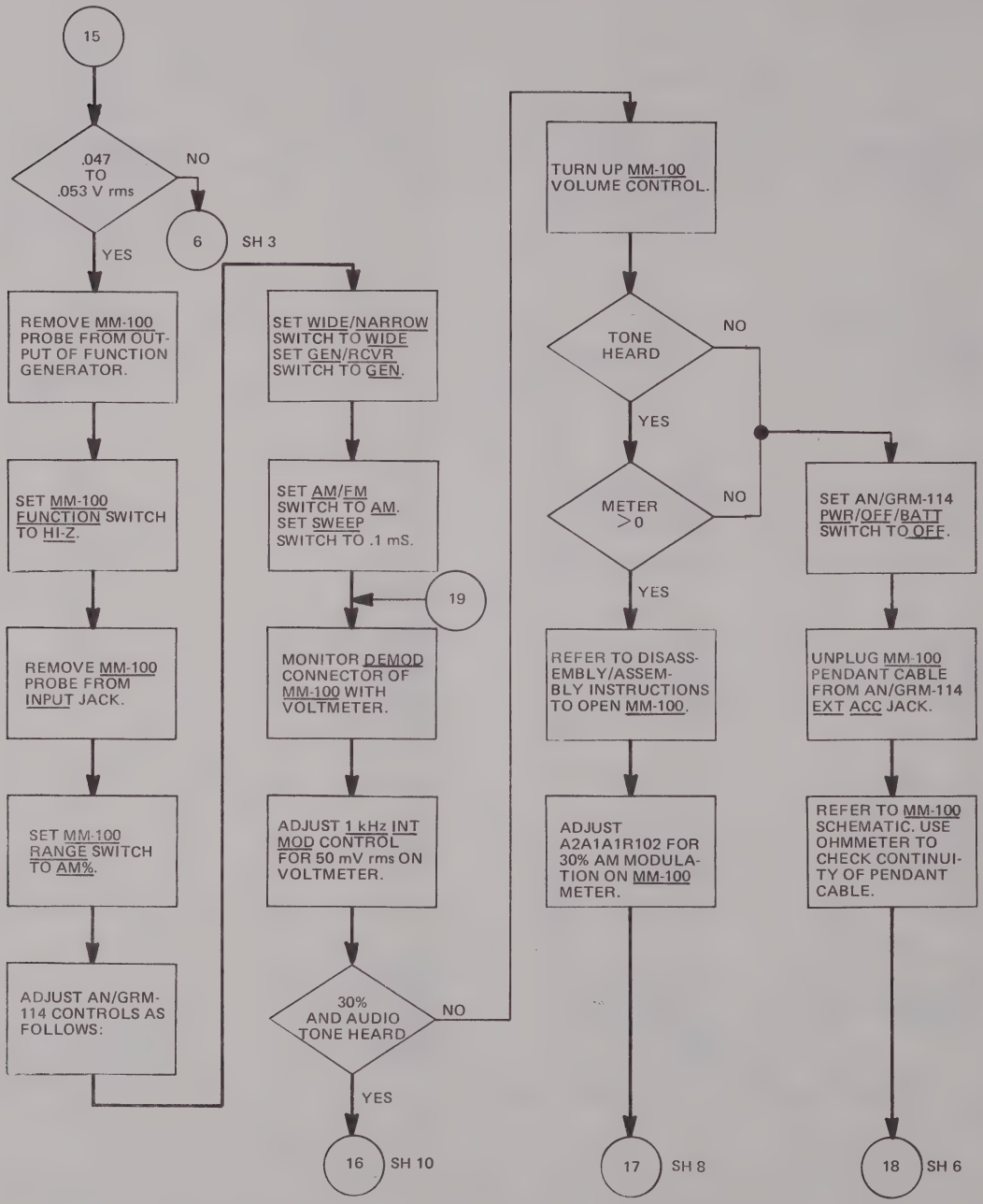
15
.047 TO .053 V rms
NO
YES
6
SH 3
REMOVE MM-100 PROBE FROM OUTPUT OF FUNCTION GENERATOR.
SET MM-100 FUNCTION SWITCH TO HI-Z.
REMOVE MM-100 PROBE FROM INPUT JACK.
SET MM-100 RANGE SWITCH TO AM%.
ADJUST AN/GRM-114 CONTROLS AS FOLLOWS:
SET WIDE/NARROW SWITCH TO WIDE SET GEN/RCVR SWITCH TO GEN.
SET AM/FM SWITCH TO AM. SET SWEEP SWITCH TO .1 mS.
19
MONITOR DEMOD CONNECTOR OF MM-100 WITH VOLTMETER.
ADJUST 1 kHz INT MOD CONTROL FOR 50 mV rms ON VOLTMETER.
30% AND AUDIO TONE HEARD
NO
YES
16
SH 10
TURN UP MM-100 VOLUME CONTROL.
TONE HEARD
NO
YES
METER >0
NO
YES
REFER TO DISASSEMBLY/ASSEMBLY INSTRUCTIONS TO OPEN MM-100.
ADJUST A2A1A1R102 FOR 30% AM MODULATION ON MM-100 METER.
17
SH 8
SET AN/GRM-114 PWR/OFF/BATT SWITCH TO OFF.
UNPLUG MM-100 PENDANT CABLE FROM AN/GRM-114 EXT ACC JACK.
REFER TO MM-100 SCHEMATIC. USE OHMMETER TO CHECK CONTINUITY OF PENDANT CABLE.
18
SH 6

Figure 5-12. MM-100 multimeter troubleshooting (sheet 9 of 10)

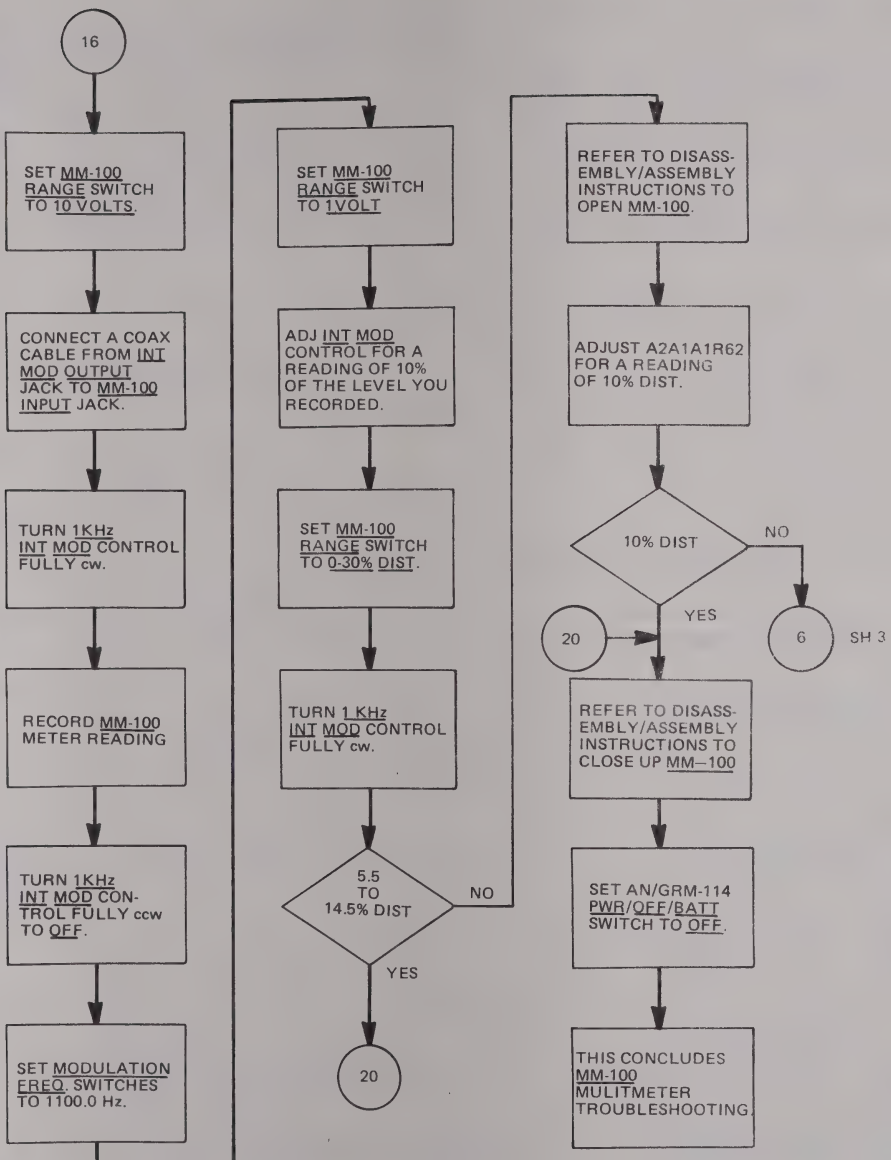
16
SET MM-100 RANGE SWITCH TO 10 VOLTS.
CONNECT A COAX CABLE FROM INT MOD OUTPUT JACK TO MM-100 INPUT JACK.
TURN 1KHz INT MOD CONTROL FULLY cw.
RECORD MM-100 METER READING
TURN 1KHz INT MOD CONTROL FULLY ccw TO OFF.
SET MODULATION FREQ. SWITCHES TO 1100.0 Hz.
SET MM-100 RANGE SWITCH TO 1VOLT
ADJ INT MOD CONTROL FOR A READING OF 10% OF THE LEVEL YOU RECORDED.
SET MM-100 RANGE SWITCH TO 0-30% DIST.
TURN 1 KHz INT MOD CONTROL FULLY cw.
5.5 TO 14.5% DIST
NO
YES
20
REFER TO DISASS-EMBLY/ASSEMBLY INSTRUCTIONS TO OPEN MM-100.
ADJUST A2A1A1R62 FOR A READING OF 10% DIST.
10% DIST
NO
YES
20
6
SH 3
REFER TO DISASS-EMBLY/ASSEMBLY INSTRUCTIONS TO CLOSE UP MM-100
SET AN/GRM-114 PWR/OFF/BATT SWITCH TO OFF.
THIS CONCLUDES MM-100 MULITMETER TROUBLESHOOTING.

Figure 5-12. MM-100 multimeter troubleshooting (sheet 10 of 10)

5-7. AN/GRM-114 Alignment and Adjustment.

a. *General.* The AN/GRM-114 contains numerous assemblies which are interactive with the functioning of other assemblies. When these assemblies are replaced as part of faults found while using the performance tests or troubleshooting tests, the interactive assembly or assemblies must be aligned or adjusted. Table 5-10 is a listing of assemblies which, when adjusted, aligned or replaced require that other assemblies also be aligned or adjusted. If in the performance of these alignment procedures adjustment does not achieve the required values, refer to the troubleshooting procedures of paragraph 5-6. When the required values have been achieved and the appropriate alignment procedures have been performed, return to the beginning of Figure 5-2, AN/GRM-114 Performance Test.

Table 5-10. AN/GRM-114 Assemblies and Interactive Assemblies

Assembly	Align or adjust assembly
Heterodyne Amplifier ÷2 Prescaler A1A3A1	VCO Tuner A1A11
1200-2200 MHz Oscillator A1A3A2	VCO Tuner A1A11
A.G.C. System A1A3A3	a. VCO Tuner A1A11 b. High Frequency Multiplier/Mixer A1A26
108 MHz Bandpass Filter A1A5	1080 MHz Multiplier Amplifier A1A15
1200 MHz Amplifier A1A6	a. 250 KHz I.F. Monitor Audio A1A13 b. FM/AM Generator A1A24A3
Static Discharge Protector A1A7	250 KHz I.F. Monitor Audio A1A13
Duty Cycle Regulator A1A8A1	Regulator and Power Supply A1A14
High Frequency Phase Lock A1A9	VCO Tuner A1A11
VCO Tuner A1A11	VCO Tuner A1A11
250 KHz I.F. Monitor Audio A1A13	250 KHz I.F. Monitor Audio A1A13
Regulator and Power Supply A1A14	Regulator and Power Supply A1A14
1080 MHz Multiplier Amplifier A1A15	1080 MHz Multiplier Amplifier A1A15
1200 MHz Diode Switch A1A16	a. 250 KHz I.F. Monitor Audio A1A13 b. FM/AM Generator A1A24A3

Table 5-10. AN/GRM-114 Assemblies and Interactive Assemblies - Continued

Assembly	Align or adjust assembly
Power Monitor A1A17	Power Monitor A1A17
Spectrum Analyzer A1A18	Spectrum Analyzer A1A18
First Mixer A1A19	a. 250 KHz I.F. Monitor Audio A1A13 b. FM/AM Generator A1A24A3
Second Mixer A1A20	a. 250 KHz I.F. Monitor Audio A1A13 b. FM/AM Generator A1A24A3
100 MHz Filter A1A21	a. High Frequency Multiplier/Mixer A1A26 b. VCO Tuner A1A11
100 MHz Amplifier/ 108 MHz Mixer A1A24A1	1080 MHz Multiplier Amplifier A1A15
120 MHz Receiver A1A24A2	250 KHz I.F. Monitor Audio A1A13
FM/AM Generator A1A24A3	FM/AM Generator A1A24A3
High Frequency Multiplier/ Mixer A1A26	a. High Frequency Multiplier/Mixer A1A26 b. VCO Tuner A1A11

b. *VCO Tuner A1A11 Alignment.* VCO Tuner A1A11 is aligned using the following procedure:

(1) Remove all power from the AN/GRM-114 and disassemble the unit to gain access to the VCO Tuner A1A11 module. Then apply power to the AN/GRM-114.

(2) Set the FREQUENCY MHz thumbwheels to 000 000 0.

(3) On 1200-2200 MHz Oscillator A1A3-A2, tag and remove plugs A1A3A2P4 and A1A3A3P1 from jack A1A3A2J4 and A1A3A3J1 respectively.

(4) Attach plug A1A3A3P1 (removed in step (3)) to jack A1A3A2J4.

(5) On High Frequency Phase Lock A1A9, tag and remove plug A1A9P3 from jack A1A9J3.

(6) Attach SMB tee adapter to jack A1A9J3 on High Frequency Phase Lock A1A9.

(7) Attach plug A1A9P3 (removed in step (5)) to the tee adapter.

(8) Connect coaxial cable between the SMB tee adapter at A1A9J3 and the SCOPE IN connector on AN/GRM-114 front panel.

(9) Set the oscilloscope controls for a display of 0 to 8 V dc.

(10) On VCO Tuner A1A11 set A1A11R3 fully cw. Measure and record the dc level displayed on the oscilloscope.

(11) Set A1A11R3 fully ccw. Measure and record the dc level displayed on the oscilloscope.

(12) Adjust A1A11R3 to a setting at midpoint of the dc levels recorded in steps (10) and (11).

NOTE

If the display measured in steps (10) and (11) is a stairstep, adjust A1A11R3 to midrange.

(13) Set the MM-100 meter for measuring dc voltage and connect the test leads between VCO Tuner A1A11TP1 and a AN/GRM-114 chassis ground.

(14) Set the FREQUENCY MHz thumbwheels to the settings and check for the readings listed for the particular frequency as listed in table 5-11.

NOTE

When performing step (14), if any voltage reading measured is not within the reading listed for the particular frequency, adjust the potentiometer listed in table 5-11 as 1) to achieve the reading. If this does not achieve the reading, set the 1) potentiometer to midrange and adjust the potentiometer listed as 2) to achieve the reading.

When performing step (14), if an adjustment is made in a set as listed, repeat the adjustments in the set listed in table 5-11 until the readings for the set are achieved without adjustment of any potentiometer.

Table 5-11. VCO Tuner Adjustment.

Set	Frequency MHz setting	Reading (volts dc)	Adjust
1	000 000 0	5 to 7	1) A1A11R9 2) A1A11R6
	199 999 0	−25 to −27	1) A1A11R6 2) A1A11R9
2	200 000 0	5 to 7	1) A1A11R15 2) A1A11R19
	399 000 0	−25 to −27	1) A1A11R19 2) A1A11R15
3	400 000 0	5 to 7	1) A1A11R26 2) A1A11R30
	599 000 0	−25 to −27	1) A1A11R30 2) A1A11R26
4	600 000 0	5 to 7	1) A1A11R32 2) A1A11R36
	799 000 0	−25 to −27	1) A1A11R36 2) A1A11R32
5	800 000 0	5 to 7	1) A1A11R38 2) A1A11R42
	999 000 0	−25 to −27	1) A1A11R42 2) A1A11R38

(15) On 1200-2200 MHz Oscillator A1A3-A2, set A1A3A2A1R1 fully cw.

(16) Observe the tune line on the oscilloscope while varying A1A11R3 fully through its entire range and check that the tune line does not oscillate and is centered on the center horizontal line.

NOTE

When performing step (16), if correct skip to step (19); if the tune line oscillates perform steps (17) and (18); if the tune line is not centered perform step (18).

(17) On 1200-2200 MHz Oscillator A1A3-A2, adjust A1A3A2A1R1 so that the tune line does not oscillate when varying A1A11R3 through the entire range of adjustment.

(18) Adjust A1A11R3 so that the tune line is centered on the center horizontal line.

(19) Disconnect the test leads from A1-A11TP1 and ground, the coaxial cable from the SMB adapter and SCOPE IN connector, plug A1A9A3 from the tee adapter, and the SMB tee adapter from A1A9J3.

(20) Connect plugs A1A9P3, A1A3A2P4, and A1A3A3P1 to jacks A1A9J3, A1A3A2J4, and A1A3A3J1 respectively.

(21) Remove all power from the AN/GRM-114 and reaasemble.

c. *High Frequency Multiplier/Mixer A1-A26 Alignment.* High Frequency Multiplier/Mixer A1A26 is aligned using the following procedure:

(1) Make sure the power cord is disconnected.

(2) Remove fuse A1A8F3 from AN/GRM-114.

(3) Disassemble the AN/GRM-114 to gain access to High Frequency Multiplier/Mixer A1A26 and remove the A1A26 assembly.

(4) Connect the extender cable between jack A1A26J4 and plug A1A26P4.

(5) Connect the AN/GRM-114 115 volt or power cord to a 115 volt ac source.

(6) Insert the high frequency sniffer to the center of the A1A26 assembly.

(7) Apply power to the AN/GRM-114.

(8) Set the spectrum analyzer controls for a center frequency of 1600 MHz and a 0-dB reference and connect coaxial cable between the high-frequency sniffer and the spectrum analyzer.

(9) Set FREQUENCY MHz thumbwheels to the frequencies listed in table 5-12 and check and record selected tune pulse frequency and amplitude as listed.

(10) When performing step (9), if the selected tune pulse is not within tolerance, make the adjustment as listed above in table 5-12 to achieve the tolerance. Record each selected tune pulse.

(11) Check that all selected tune pulses recorded in either step (9) or (10) are within 3 dB of one another.

(12) When performing step (11), if any selected tune pulse is not within tolerance, adjust all selected tune pulses to achieve the 3-dB tolerance.

(13) Turn power off, remove the power cord from its source of power, remove the high frequency sniffer from A1A26 assembly, and remove the extender from A1A26J4 and A1-A26P4.

(14) Reinstall the A1A26 assembly in the AN/GRM-114.

Table 5-12. Tune Pulse Frequency and Amplitude Tests.

	FREQUENCY				
Frequency MHz switch settings	1100	1300	1500	1700	1900
000 000 0	*—18 to —25 dB	Below —43 dB	Below —43 dB	Below —43 dB	Below —43 dB
200 000 0	Below —43 dB	*—18 to —25 dB	Below —43 dB	Below —43 dB	Below —43 dB
400 000 0	Below —43 dB	Below —43 dB	*—18 to —25 dB	Below —43 dB	Below —43 dB
600 000 0	Below —43 dB	Below —43 dB	Below —43 dB	*—18 to —25 dB	Below —43 dB
800 000 0	Below —43 dB	Below —43 dB	Below —43 dB	Below —43 dB	*—18 to —25 dB
ADJUSTMENT	TU5	TU4	TU3	TU2	TU1

*Selected tune pulse

(15) Reconnect the power cord to its power source and turn power on.

(16) Insert the high-frequency sniffer to the center of the A1A26 assembly and repeat steps (9) through (12).

(17) Remove the high-frequency sniffer and coaxial cable, turn power off, and remove power cord from its power source.

(18) Reassemble the AN/GRM-114 and install fuse A1A8F3.

d. *1080 MHz Multiplier Amplifier A1A15.* 1080 MHz Multiplier Amplifier A1A15 is aligned using the following procedure:

(1) Remove all power from the AN/GRM-114 and disassemble the unit to gain access to 1080 MHz Multiplier Amplifier A1A15 and Second Mixer A1A20.

(2) Tag and remove plug A1A20P5 from jack A1A20J5 on Second Mixer A1A20 and connect to SMB jack-to-jack adaptor.

(3) Connect coaxial cable from SMB jack-to-jack adaptor and the spectrum analyzer input.

(4) Apply power and set spectrum analyzer controls for a center frequency of 1080 MHz and a +10 dB reference level.

(5) Check that the spectrum analyzer displays 1080 MHz at +4 dB (or greater) and that all harmonics are at least 50 dB below the level of the 1080 MHz signal.

(6) If the check performed in step (5) is not correct, adjust A1A15 TU1 and A1A15 TU2 (tuning screws) on the 1080 MHz cavity filter to obtain maximum amplitude of the 1080 MHz signal.

(7) Set the PWR OFF BATT switch to OFF and then back to PWR and check that the display on the spectrum analyzer is stable with no oscillations.

(8) If the check performed in step (7) is not correct, adjust A1A15TU1 and A1A15TU2 until the display is stable.

(9) Turn power off, remove the coaxial cable and SMB jack-to-jack adaptor.

(10) Connect plug A1A20P5 to jack A1A20J5 on the Second Mixer.

(11) Reassemble the AN/GRM-114.

e. *250 KHz I.F. Monitor Audio A1A13.* 250 KHz I.F. Monitor Audio A1A13 is aligned using the following procedure:

(1) Remove all power from the AN/GRM-114 and disassemble the unit to gain access to the 250 KHz I.F. Monitor Audio A1A13 module.

(2) Connect AN/GRM-114 115 volt ac power cord to a 115-volt ac power source and set the front panel controls as listed.

Control	Setting
GEN/RCVR	RCVR
RCVR WIDE/MID/NARROW	NARROW
FREQUENCY MHz	120 200 0
SQUELCH/OFF	Fully ccw to detent (not off)
INT MOD/RCVR	RCVR
AM/FM	AM
VOL	Fully ccw
1.5/5/15 KHz	15 KHz
AUTO/ZERO BATT	AUTO
EXT V/DIV	15
EXT V/DIV (vernier)	CAL
SWEEP	0.1 mS
DEV/PWR	SIG
PWR/OFF/BATT	PWR

(3) Connect a coaxial cable between ANT INPUT jack and the ref signal generator output.

(4) Set the rf signal generator for an output frequency of 120.2 MHz with an output level of −110 dBm and a moddulation of 1 kHz at 30%.

(5) Check that the ANT INPUT LEVEL lamp lights. If the lamp does not light, adjust A1A13R8 until the lamp just lights.

(6) Set RCVR WIDE/MID/NARROW switch to WIDE.

(7) Check that the ANT INPUT LEVEL lamp lights. If the lamp does not light, adjust A1A13R7 until the lamp just lights.

(8) Set the rf signal generator for an output level of −25 dBm.

(9) Check that the DEVIATION meter deflects full scale to the right. If the meter does not indicate full scale deflection, adjust A1A13R91 for a full scale reading.

NOTE

In performing steps (5) through (9), if any adjustments were required, repeat these steps until no adjustments are required.

(10) Set RCVR WIDE/MID/NARROW switch to NARROW; set VERT control to center the trace; the EXT V/DIV switch to 1; the AC/DC switch to DC; and connect the scope X1 probe between the SCOPE IN jack and the tie point of A1A13R25 and A1A13R26.

(11) Check that the oscilloscope trace deflects +2 volts or less. If the trace deflection is not correct, adjust A1A13R27 for a deflection of +2 volts or less.

(12) Set the RCVR WIDE/MID/NARROW switch to WIDE and check that the oscilloscope trace deflects −2 volts or less. If the trace deflection is not correct, adjust A1A13R27.

NOTE

In performing steps (11) and (12), if any adjustments were required, repeat these steps until no adjustments are required.

(13) Remove the scope X1 probe.

(14) Set the RCVR WIDE/MID/NARROW switch to NARROW; the AM/FM switch to FM; the 1.5/5/15 KHz switch to 1.5; the SQUELCH control fully cw; and the FREQUENCY MHz thumbwheels to 000 100 0.

(15) Check that the FREQ. ERROR (KHz) meter indicates 0. If the meter is not correct, adjust A1A13R47 for the 0 indication.

(16) Set the SQUELCH control fully ccw (into detent-off); the EXT V/DIV switch to 15; the FREQUENCY MHz thumbwheels to 000 000 0; the VERT control to center the oscilloscope trace on the center horizontal line; and the 1.5/5/15 KHz switch to 15.

(17) Set the FREQUENCY MHz thumbwheels to 000 010 0.

(18) Check that the FREQ. ERROR (KHz) meter and the oscilloscope indicate −10 ±0.5 kHz. If the FREQ. ERROR (KHz) meter indication is not correct, adjust A1A13R39 for a reading of −10 ±0.5 kHz. If the oscilloscope indication is not correct, adjust A1A13R44 for a trace that is −10 ±0.5 kHz.

(19) Set 1.5/5/15 KHz switch to 5; set EXT V/DIV switch to 5; and adjust the VERT control to center the oscilloscope trace on the center horizontal line.

(20) Set FREQUENCY MHz thumbwheels to 000 005 0. Check that the FREQ. ERROR (KHz) meter and the oscilloscope indicate −5 ±0.2 kHz. If the FREQ. ERROR (KHz) meter indication is not correct, adjust A1A13R41 for a reading of −5 ±0.2 kHz. If the oscilloscope indication is not correct, adjust A1A13R44 for a trace that is −5 ±0.2 kHz.

(21) Set 1.5/5/15 KHz switch to 1.5; set EXT V/DIV switch to 1.5; and adjust the VERT control to center the oscilloscope trace on the center horizontal line.

(22) Set FREQUENCY MHz thumbwheels to 000 001 0. Check that the FREQ. ERROR (KHz) meter and oscilloscope indicate −1 ±0.1 kHz. If the FREQ. ERROR (KHz) meter indication is not correct, adjust A1A13R42 for a reading of −1 ±0.1 kHz. If the oscilloscope indication is not correct, adjust A1A13R44 for a trace that is −1 ±0 kHz.

(23) Set FREQUENCY MHz thumbwheels to 000 000 0 and set the GEN/RCVR switch to GEN.

(24) Check that the FREQ. ERROR (KHz) meter indicates 0. If the FREQ ERROR (KHz) meter indication is not correct, adjust the ZERO/RCVR screwdriver adjustment for 0.

(25) Set the GEN/RCVR switch to RCVR; set DEV/PWR switch to 2 KHz; and set the AUTO/ZERO BATT switch to AUTO.

(26) Check that the DEVIATION (KHz) meter indicates 0. If the DEVIATION (KHz) meter indication is not correct, adjust A1A13R71 for a reading of 0.

(27) Set the GEN/RCVR switch to GEN and check that the DEVIATION (KHz) meter indicates 0. If the DEVIATION (KHz) meter indication is not correct, adjust A1A13R81 for a reading of 0.

(28) Connect the coaxial cable between the TRANS/RCVR jack and an external modulation meter; set the FREQUENCY MHz thumbwheels to 120 000 0; set the EXT V/DIV switch to 15 KHz; set RCVR WIDE/MID/NARROW switch to WIDE; set the HI LVL/NORM switch to HI LVL; and set the DEV/PWR switch to 20 KHz.

NOTE

When performing step (29), if necessary to obtain an indication on the modulation meter, adjust the RF LEVEL/BFO INJECTION dial.

(29) Set 1 KHz INT MOD control for a 10 kHz indication on the external modulation meter.

(30) Check that the DEVIATION (KHz) meter indicates 10 ±0.1 kHz. If the DEVIATION (KHz) meter indication is not correct, adjust A1A13R79 for a reading of 10 ±0.1 kHz.

(31) Set the 1 KHz INT MOD control for a 4 kHz indication on the modulation meter; set the RCVR WIDE/MID/NARROW switch to NARROW; set the EXT V/DIV switch to 6 KHz; and set the DEV/PWR switch to 6 KHz.

(32) Check that the DEVIATION (KHz) meter indicates 4 ±1 kHz. If the DEVIATION (KHz) meter indication is not correct, adjust A1A13R83 for a reading of 4 ±1 kHz.

(33) Set 1 KHz INT MOD control for a 1 kHz indication on the modulation meter; set the EXT V/DIV switch to 1.5 KHz; and set the DEV/PWR switch to 2 KHz.

(34) Verify that the DEVIATION (KHz) meter indicates 1 ±0.05 kHz. If the DEVIATION (KHz) meter indication is not correct, adjust A1A13R85 for a reading of 1 ±0.05 kHz.

(35) Disconnect the external modulation meter and coaxial cable.

(36) Connect the coaxial cable between the MM-100 DE-MOD jack and the digital multimeter; connect the MM-100 cable to the EXT ACC jack on the AN/GRM-114; set the GEN/RCVR switch to RCVR; set AM/FM switch to AM; and connect a coaxial cable between the ANT INPUT jack and the rf signal generator output.

(37) Adjust the rf signal generator for a 120-MHz output with a level of —60 dBm and modulation of 1 kHz at 30%.

(38) Verify that the digital multimeter indicates 50 millivolts. If the digital multimeter indication is not correct, adjust A1A13R115 for a multimeter indication of 50 millivolts.

(39) Remove all cables and test equipment, turn off power, remove Power Cord from Power Source and reassemble the AN/GRM-114.

f. *FM/AM Generator A1A24A3.* FM/AM Generator A1A24A3 is aligned using the following procedure:

(1) Remove all power from the AN/GRM-114 and disassemble the unit to gain access to the FM/AM Generator A1A24A3 module.

(2) Remove the metal shield from the FM/AM Generator mechanical assembly A1A24A3, then connect the digital voltmeter between the tie point of R24 and R25 on circuit A1A24A3A1.

(3) Connect the AN/GRM-114 Power cord to power source and set the front panel controls as listed:

Control	Setting
GEN/RCVR	GEN
RCVR WIDE/MID/NARROW	NARROW
AC/DC	DC
AM/FM	AM
SWEEP	10 μS
INT MOD	OFF
1 KHz INT MOD	OFF
EXT V/DIV	15 KHz
DEV/PWR	SIG
BFO OFF	BFO
1.5/5/15 KHz	5 KHz

(4) Adjust A1A24A3L2 through its entire range cw and then fully ccw and check that the digital voltmeter indicates 1 to 10 volts dc.

(5) Adjust A1A24A3L2 for an indication of 5 ±0.5 volts dc on the digital voltmeter and check that the 250 kHz signal displayed on the oscilloscope is stable.

NOTE

If the indications measured in steps (4) and (5) are not correct, replace FM/AM Generator A1A24A3 and repeat steps (3) through (5) before proceeding.

(6) Remove the digital voltmeter; remove from AN/GRM-114; reassemble metal shield to FM/AM Generator A1A24A3; reapply power to AN/GRM-114; set the FREQUENCY MHz thumbwheels to 120 051 0; set the RF LEVEL/BFO INJECTION control to −100 dB; set the HI LVL/NORM switch to 100 μV; and connect the coaxial cable between the TRANS/RCVR jack and the spectrum analyzer input.

(7) Check that the spectrum analyzer displays a 120.051 MHz signal at 60 ±1 dB. If the spectrum analyzer display is not correct, adjust A1A24A3-R20 for a display of 120.051 MHz at 60 ±1 dB.

(8) Set the GEN/RCVR switch to RCVR; set the RF LEVEL/BFO INJECTION control to 1; set the SWEEP switch to 10 mS; and connect the coaxial cable between the ANT INPUT jack and the rf signal generator output jack.

(9) Adjust the rf signal generator for a 120.05 MHz output with an output level of 100 microvolts.

(10) Check that the oscilloscope display is as shown in figure 5-13, and the FREQ. ERROR indicates full scale deflection to the left. If the oscilloscope display and the FREQ. ERROR indication are not correct, adjust A1A24A3R21 for the proper indications.

Figure 5-13. Zero beat pattern

(11) Remove all cables and turn off power, unplug power cord and reassemble the AN/GRM-114.

g. *Regulator and Power Supply A1A14.* Regulator and Power Supply A1A14 is aligned using the following procedures:

(1) Remove all power from the AN/GRM-114 and disassemble the AN/GRM-114 to gain access to the Regulator and Power Supply A1A14 module.

(2) Connect the AN/GRM-114 power cord to power source.

(3) Set the PWR OFF BATT switch to PWR and connect the digital voltmeter between pin 5 of A1A14P1 and ground.

(4) Verify that the digital voltmeter indicates 10.95 to 11.05 volts dc. If the digital voltmeter indication is not correct, adjust A1A14R24 for a reading 11.00 volts dc.

(5) Connect the digital voltmeter between pin 9 of A1A14P1 and ground and check for an indication of −34.5 to −35.4 volts dc. If the digital voltmeter indication is not correct, replace Regulator and Power Supply A1A14.

(6) Connect the digital voltmeter between pin 15 of A1A14P1 and ground and check for an indication of −10.5 to −13.5 volts dc. If the digital voltmeter indication is not correct, replace Regulator and Power Supply A1A14.

(7) Set the PWR OFF BATT switch to OFF; remove the AN/GRM-114 power cord from power source, and disconnect the internal battery.

(8) Observe the polarity and connect the dc power supply to the AN/GRM-114 battery leads.

(9) Connect the digital voltmeter to the dc power supply output and adjust

the dc power supply for a 14 volt dc output as indicated on the digital voltmeter.

(10) Set the PWR OFF BATT switch to BATT.

(11) Observe the digital voltmeter and adjust the dc power supply to decrease the output voltage and check that the AN/GRM-114 power cuts off when the digital voltmeter indicates between 10.8 and 11.2 volts dc. If the AN/GRM-114 power does not cutoff correctly, adjust A1A14R14 until the proper cutoff voltage level is achieved.

(12) Repeat steps (9) through (11) until no adjustment is required to achieve proper cutoff voltage.

(13) Adjust the dc power supply for a 14 volt dc output as indicated on the digital voltmeter and set PWR OFF BATT to BATT and depress twice.

(14) Hold the AUTO/ZERO BATT switch in the ZERO BATT position and check that the DEVIATION (KHz) meter indicates 14 on the 0 to 20 scale. If the DEVIATION (KHz) meter indication is not correct, adjust A1A14R28 for an indication of 14.

(15) Disconnect DC Power Supply and reconnect internal battery.

(16) Turn off all power, remove all cables and test instruments, and reassemble the AN/GRM-114.

h. *Power Monitor A1A17.* Power Monitor A1A17 is aligned using the following procedure:

(1) Remove all power from the AN/GRM-114 and disassemble the AN/GRM-114 to gain access to the Regulator and Power Supply A1A14 module.

(2) Obtain an rf power source capable of providing 50 watts of power and record the type of modulation, the deviation, and frequency of the rf power source.

(3) Set the AN/GRM-114 controls as listed:

Control	Setting
DEV/PWR	X1 WATTS
GEN/RCVR	GEN
AM/FM	As recorded in step b.
RCVR WIDE/MID/NARROW	a) If deviation recorded in step b. is 0 to 9 kHz - NARROW b) If deviation recorded in step b. is <9 - WIDE
AUTO/ZERO BATT	AUTO
AC/DC	DC
FREQUENCY MHz	As recorded in step b.

CAUTION

Connect the OUTPUT of the 10 dB pad to ONLY the TRANS/RCVR jack. Connection to any other jack will cause severe damage to the AN/GRM-114.

(4) Connect a coaxial cable between the rf power source and the INPUT of the 10 dB pad and a coaxial cable between the OUTPUT of the 10 dB pad and the AN/GRM-114 TRANS/RCVR jack.

(5) Turn on or key the 50 watt rf power source and check for an indication of 5 watts or the DEVIATION (KHz) meter. If the indication on the DEVIATION (KHz) meter is not correct, adjust A1A14R36 for a 5 watt indication.

(6) Turn off or unkey the 50 watt rf power source; set the DEV/PWR switch to X10 WATTS; and remove the coaxial cables and the 10 dB pad.

(7) Connect the coaxial cable between the output of the 50 watt rf power source

and the TRANS/RCVR jack on the AN/GRM-114.

(8) Turn on or key the 50 watt rf power source and check that the DEVIATION (KHz) meter indicates 5. If the DEVIATION (KHz) indication is not correct, adjust A1A14R34 for 5 on the meter.

(9) Turn off all power, remove all cables and test instruments and reassemble the AN/GRM-114.

i. *Spectrum Analyzer A1A18.* Spectrum Analyzer A1A18 is aligned using the folllowing procedure.

(1) Remove all power from the AN/GRM-114 and disassemble the unit to gain access to the Spectrum Analyzer A1A18 module.

(2) Connect the AN/GRM-114 power cord to a power source and set the front panel controls as listed:

Control	Setting
MODULATION FREQ Hz	1000.0
INT MOD	Midrange
GEN/RCVR	GEN
ANALY DISPR	Fully ccw to off.
EXT V/DIV	15 KHz
SWEEP	1 mS
PWR/OFF/BATT	PWR
VERT and HORIZ	Center signal on CRT.
FOCUS and INTENSITY	Clean and sharp display on CRT
AM/FM	FM
SWEEP vernier	Fully cw to CAL

(3) Set HORIZ control so that the first cycle is aligned with the first major division on the left of the CRT.

(4) Verify that 9 cycles appear on the CRT. If 9 cycles are not displayed, adjust A1A18A4R40 for the correct display.

(5) Set HORIZ control so that the fifth cycle is on the center graticule of the CRT.

(6) Verify that each cycle is aligned with the major divisions ±1 minor division of the CRT graticule. If all cycles are not aligned, adjust A1A18A4R47 for the correct alignment.

(7) Set the EXT V/DIV switch to 1.5 KHz.

(8) Set the INT MOD control for 1 major division and verify that the displayed signal remains synchronized. If the signal is not synchronized, adjust A1A18A4R40 to synchronize the signal.

(9) Observe the amplitude of the displayed signal and set the EXT V/DIV vernier control fully ccw.

(10) Verify that the signal displayed decreases to approximately 1/10 of the observed amplitude and stays synchronized. If the displayed signal is not correct, adjust A1A18A4R40 to obtain the synchronized signal desired.

(11) Set the EXT V/DIV Vernier control fully cw to CAL, the AM/FM switch to AM, and vary the INT MOD/OFF control to produce an AM signal envelope with 0 to 10% modulation.

(12) Verify that the signal displayed stays synchronized. If the signal does not remain synchronized, adjust A1A18-A4R40 to obtain synchronization.

(13) Set the SWEEP switch to 0.1 mS.

(14) While adjusting the SWEEP vernier control ccw, verify that the signal displayed stays synchronized. If the signal does not stay synchronized, adjust A1A18A4R40 to keep the signal synchronized.

(15) Set SWEEP Vernier control fully cw to CAL.

(16) Repeat steps (3) through (15) until no adjustments are required.

(17) Attach a BNC tee adapter to the SCOPE IN connector on the front panel.

(18) Connect a coaxial cable between the INT MOD OUT connector and one side of the BNC tee.

(19) Connect a coaxial cable between the remaining side of the BNC tee and the vertical input of an external oscilloscope.

(20) Set the EXT V/DIV switch to .1 KHz and the SWEEP switch to 1 mS.

(21) Set the external oscilloscope for 0.1 volts per division, 1 millisecond per division horizontal sweep, and adjust the AN/GRM-114 INT MOD control for a four major division signal on the external oscilloscope.

(22) Verify that the AN/GRM-114 CRT indicates a 4 major division ±1 minor division signal display. If the signal displayed is not correct, adjust A1A18A4R7 for the correct indication.

(23) Set the external oscilloscope for 0.01 volt per division, the AN/GRM-114 EXT V/DIV switch to .01, and the INT MOD control for a four major division signal on the external oscilloscope.

(24) Verify that the AN/GRM-114 CRT indicates a 4 major division ±1 minor division signal display. If the signal displayed is not correct, adjust A1-A18A4R7 for the correct indication.

(25) Set the external oscilloscope for 1 volt per division, the AN/GRM-114 EXT V/DIV switch to 1, and the INT MOD control for a four major division signal on the external oscilloscope.

(26) Check that the AN/GRM-114 CRT indicates a 4 major division ±1 minor division signal display. If the signal displayed is not correct, adjust A1-A18A4R7 for the correct indication.

(27) Set the external oscilloscope for 10 volts per division, the AN/GRM-114 EXT V/DIV switch to 10, and the INT MOD control for a 1 major division signal on the external oscilloscope.

(28) Check that the AN/GRM-114 CRT indicates a 1 major division ±1 minor division signal display. If the signal displayed is not correct, adjust A1-A18A4R7 for the correct indication.

(29) Repeat steps (20) through (28) until no adjustments are required.

(30) Disconnect and remove the external oscilloscope, coaxial cables, and the BNC tee adapter.

(31) Set the ANALY DISP control cw just out of detent and the FREQUENCY MHz thumbwheels to 125 500 0.

(32) On the Dual Tone Generator A1A12 module disconnect A1A12J1 from A1A12P1.

(33) Remove all power from the AN/GRM-114, then remove the Spectrum Analyzer Assembly A1A18 from the Front Panel to gain access to Spectrum Analyzer Module No. 2 A1A18-A3. Then reapply power to the AN/GRM-114.

(34) Obtain an rf signal generator and set for a frequency of 125.500 with an rf output level of —90 dBm and connect a coaxial cable from the ANT INPUT connector to the signal generator output.

(35) Verify that the baseline on the CRT display is —109 dBm ±1 dB. If the baseline is not correct, adjust A1A1-A3R30 for the correct baseline display.

(36) Verify that the signal displayed on the CRT is —90 dBm ±1 dB. If the signal displayed is not correct, adjust A1-A18A3R4 for the correct signal display.

(37) Set the signal generator for an rf output of —60 dBm.

(38) Check that the signal displayed on the CRT is —60 dBm ±1 dB. If the signal displayed is not correct, adjust A1-A18A3R29 for the correct signal display.

(39) Repeat steps (34) through (38) until no adjustments are required.

(40) Set the signal generator for an rf output of —30 dBm.

(41) Verify that the signal displayed on the CRT is —30 dBm ±1 dB. If the signal displayed is not correct, adjust A1A18-A3R5 for the correct signal display.

(42) Remove all power from the signal generator; remove all power from the AN/GRM-114; then reinstall the Spectrum Analyzer Assembly A1A18 to the Front Panel. Apply power to the AN/GRM-114, then to the signal generator.

(43) Reduce the signal generator output in 10 dB steps from —30 dBm to —100 dBm and check that the signal displayed on the CRT decreases in 10 dB ±2 dB steps.

(44) Set the signal generator for an output of —70 dBm and set the AN/GRM-114 FREQUENCY MHz thumbwheels to 126 000 0.

(45) Verify that the signal displayed on the CRT is at the fifth major division left of the center graticule ±2 minor divisions. If the signal displayed is not correct, adjust A1A18A1R37 for the correct signal display.

(46) Set the FREQUENCY MHz thumbwheels to 125 000 0 and check that the signal displayed on the CRT is at the fifth major division right of the center graticule ±2 minor divisions. If the signal displayed is not correct, adjust A1A18A1R37 for the correct signal display.

(47) Repeat steps (44) through (46) until the adjustments to A1A18A1R37 are balanced.

(48) Set the ANALY DISPR control fully cw and the FREQUENCY MHz thumbwheels to 130 500 0.

(49) Verify that the signal displayed on the CRT is at the fifth major division right of the center graticule ±2 minor divisions. If the signal displayed is not correct, adjust A1A18A1R39 for the correct signal display.

(50) Set the FREQUENCY MHz thumbwheels to 120 500 0 and verify that the signal displayed on the CRT is at the fifth major division left of the center graticule ±2 minor divisions. If the signal displayed is not correct, adjust A1A18A1R39 for the correct signal display.

(51) Repeat steps (46) through (48) until the adjustments to A1A18A1R39 are balanced.

(52) Set the FREQUENCY MHz thumbwheels in 1 MHz steps from 120 500 0 to 130 500 0 and verify that the signal displayed on the CRT moves one major division ±2 minor divisions for each 1 MHz step.

(53) On the Dual Tone Generator A1A12 reconnect A1A12J1 to A1A12P1.

(54) Remove all cables and test equipment, turn off power, remove power cord from power source, and reassemble the AN/GRM-114.

5-8. Component Location Diagrams. Figures 5-14 through 5-45 contain the component location diagrams referred to within the troubleshooting and alignment procedures of paragraphs 5-6 and 5-7.

5-9. Inspection. This paragraph provides a checklist useful in determining the physical condition of the AN/GRM-114 through visual inspection. Defects resulting from wear, physical damage or deterioration can be detected using this checklist.

WARNING

Power to the AN/GRM-114 must be disconnected while completing entire checklist.

a. Inspect AN/GRM-114 exterior for visible damage (repair or replace damaged components as required):

(1) Check for scratches, dents, punctures, badly worn areas, broken covers or other evidence reflective of possible internal damage.

(2) Check for burned or scorched paint on AN/GRM-114 covers indicating possible AN/GRM-114 overheating.

(3) Check for evidence of corrosion.

b. Inspect AN/GRM-114 controls and indicators for defective or damaged hardware (repair or replace damaged components as required):

(1) Check for loose control knobs.

(2) Check for cracked or broken lamps.

(3) Check for burned out indicator lamps.

(4) Check for defective control knob or switch detents.

c. Inspect AN/GRM-114 connectors for visible damage (repair or replace damaged components as required):

(1) Check for corroded contacts, pins etc.

(2) Check for loose, bent or broken pins.

(3) Check for damaged connector housings or insulation.

(4) Check for improperly soldered or broken connections.

5-10. Performance Verification. Successful completion of the Performance Test (para. 5-5) and Troubleshooting (para. 5-6) flowcharts assure proper performance of the AN/GRM-114.

5-11. Disassembly Instructions.

a. *General.* The following procedures provide a complete breakdown of the AN/GRM-114 including all assemblies therein. Disassemble only as far as is necessary to reach the desired assembly and/or to effect any repair.

b. *Precautions and General Techniques.* Mark, or otherwise identify, all disconnected electrical wiring or cables.

WARNING

Disconnect power cable from power source and the BATT fuse (A1A8F3) from rear of AN/GRM-114 before disassembling any portion of the equipment.

Table 5-13 provides disassembly sequences for any module to be removed from the AN/GRM-114. Use this table before proceeding to the actual disassembly procedure for the module to be removed. This allows removal of a module using a minimum number of disassembly steps. Find the desired module to be removed in the first column of table 5-13, then, in column three, locate modules which must be removed before removing the desired module. The module removal paragraphs are listed in column four. When necessary, refer to component location diagrams located at the end of the alignment procedures to find referenced connectors, jacks, and potentiometers.

CAUTION

Use extreme care when unsoldering wires from feed-thru capacitors. Carefully lift wires straight out rather than pulling them to side.

Do not bend semi-rigid coax cables.

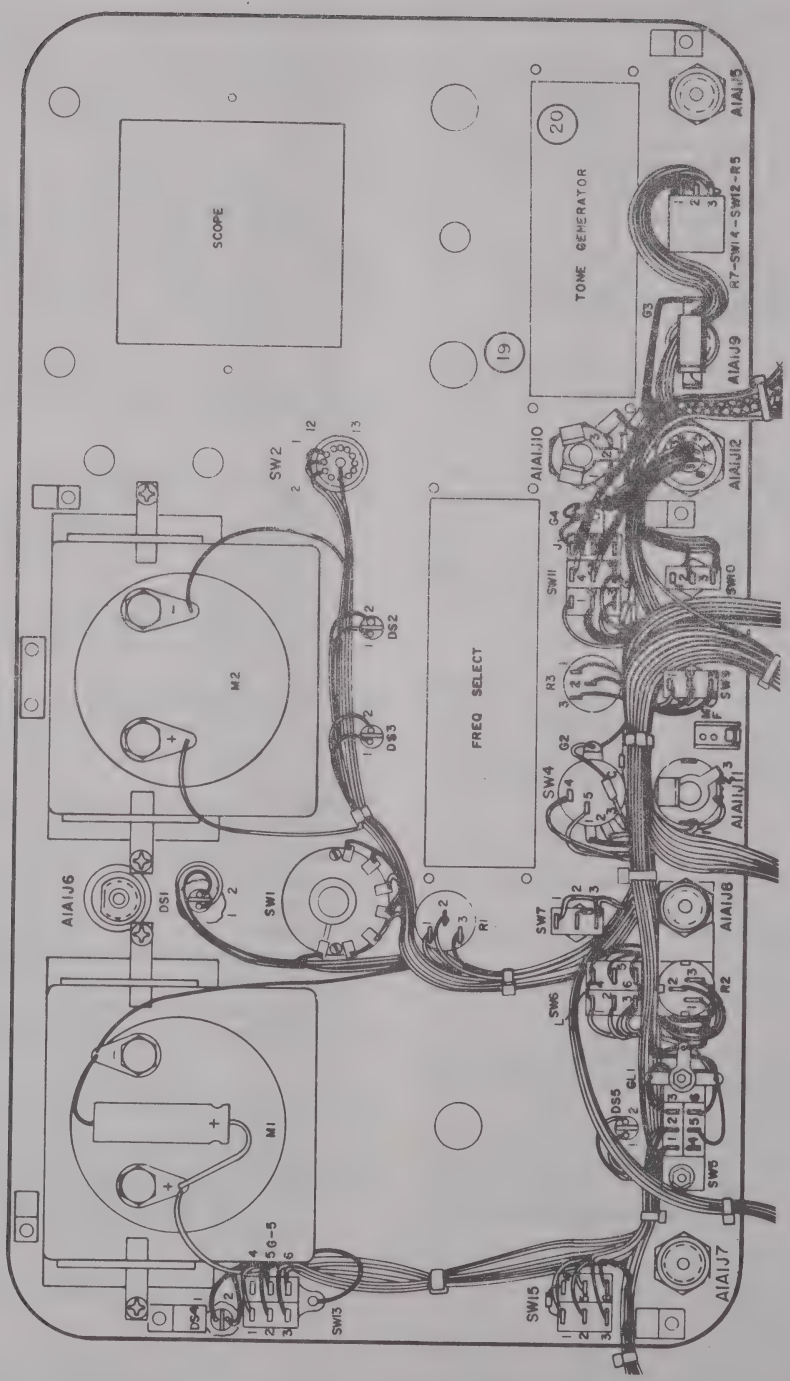

Figure 5-14. Front panel A1A1 (rear view) component location diagram

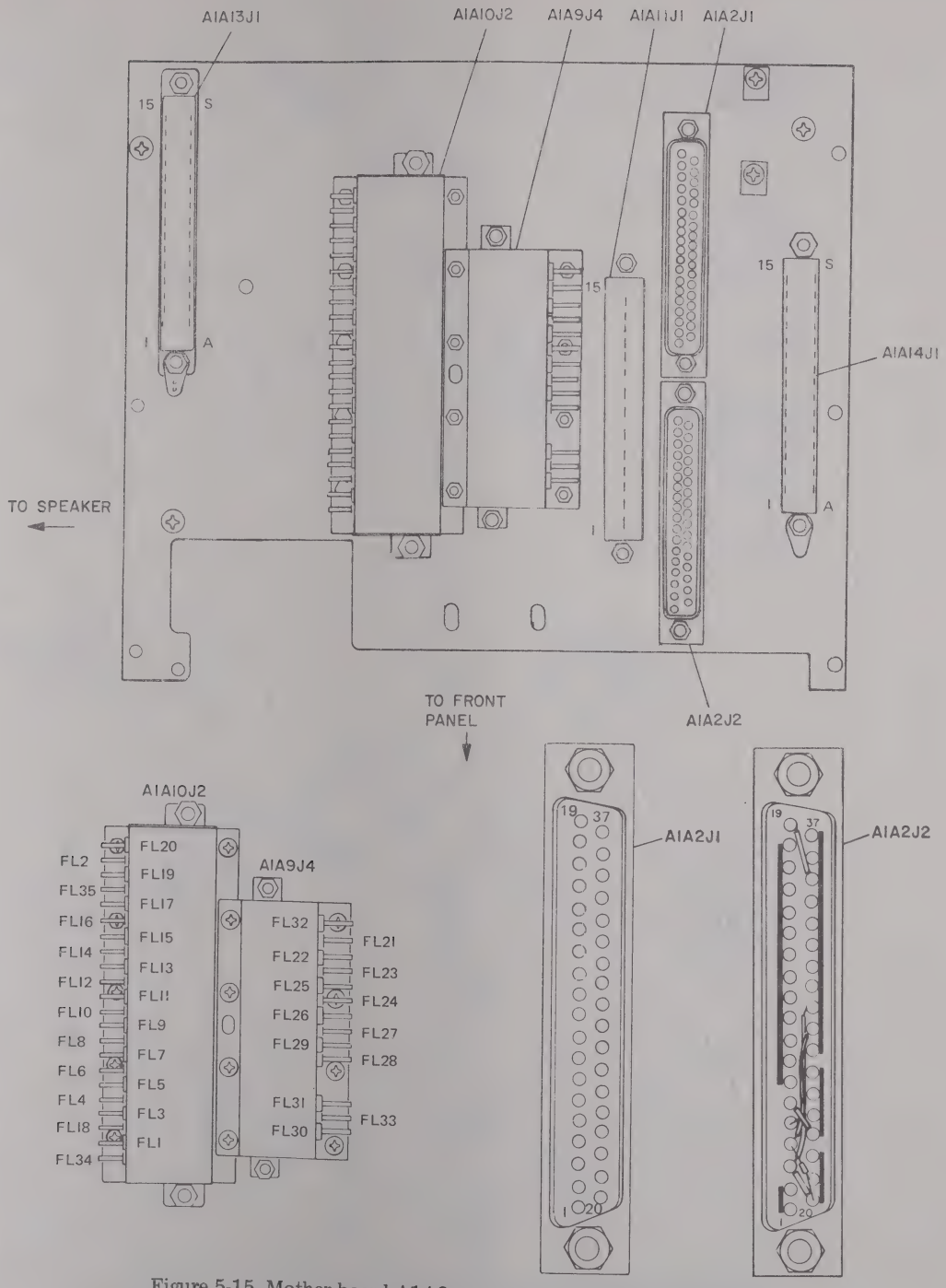

Figure 5-15 Mother board A1A2 component location diagram

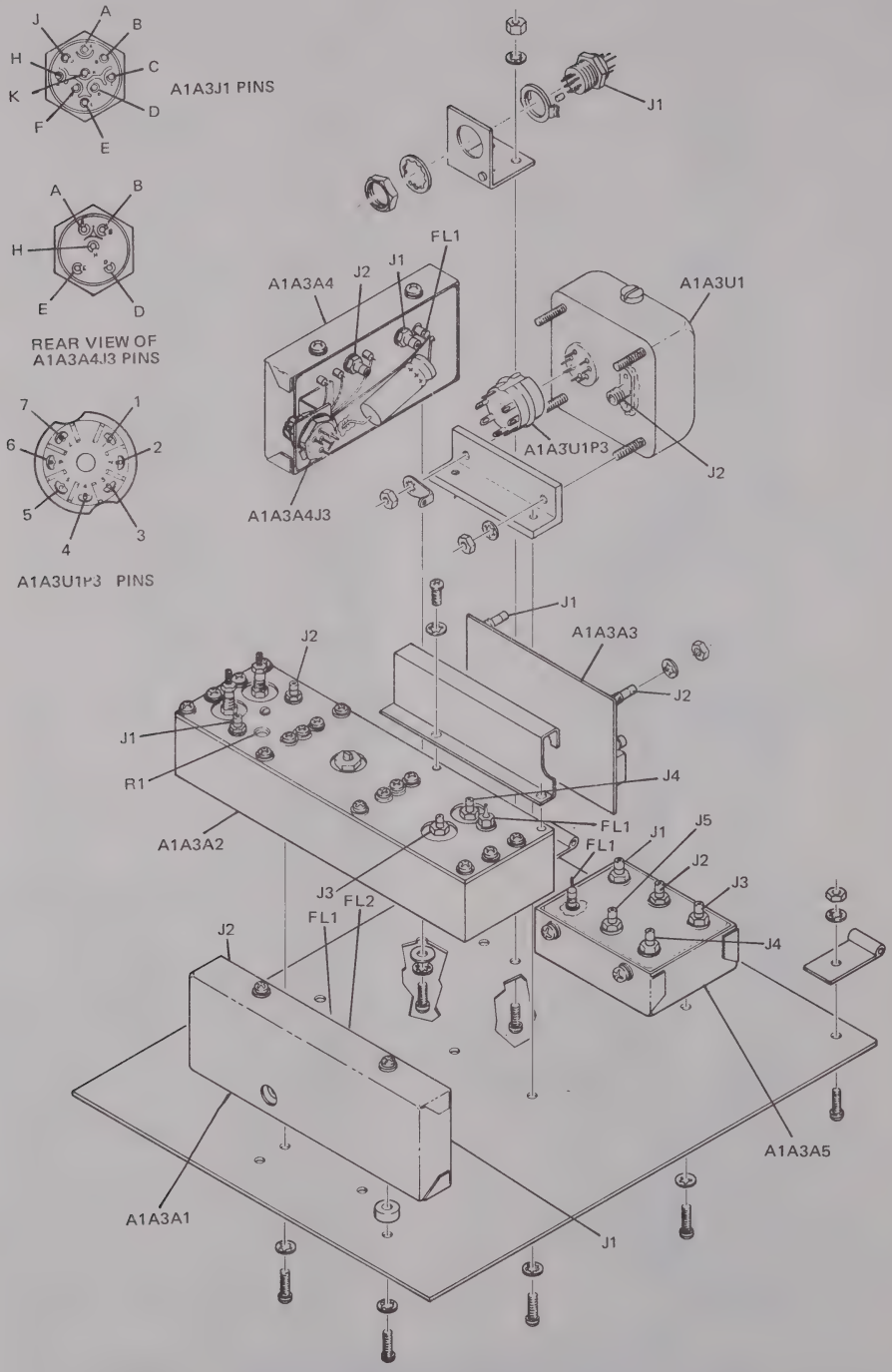

Figure 5-16. Upper floor assembly A1A3 component location diagram

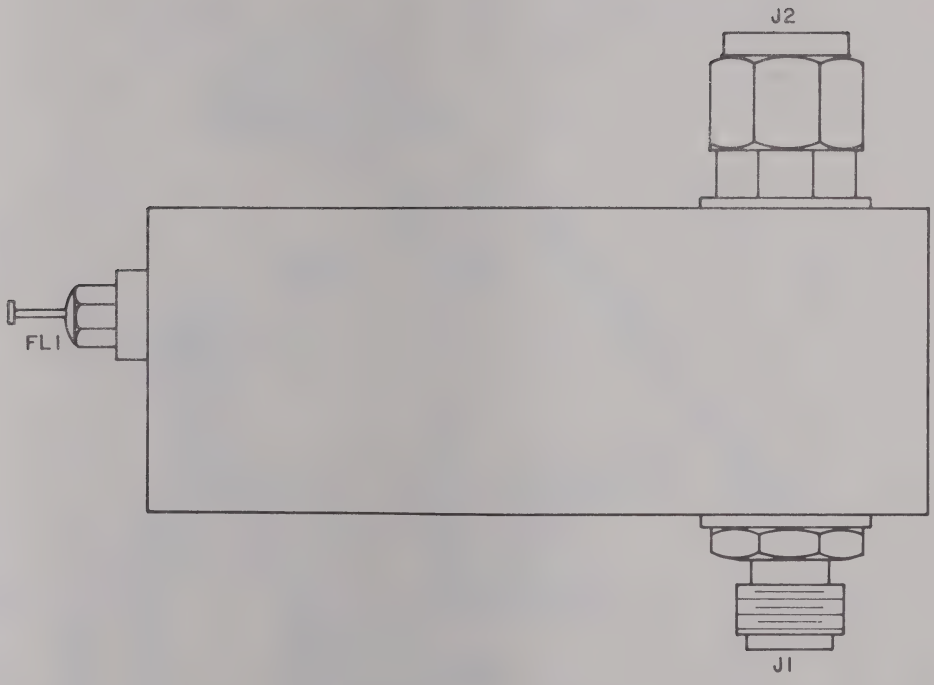

Figure 5-17. Transmitter sensor A1A4 component location diagram

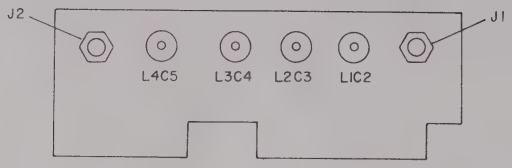

Figure 5-18. 108 MHz bandpass filter A1A5 component location diagram

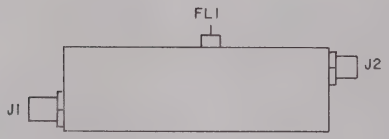

Figure 5-19. 1200 MHz amplifier A1A6 component location diagram

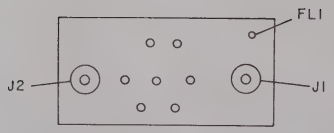

Figure 5-20. Static discharge protector A1A7 component location diagram

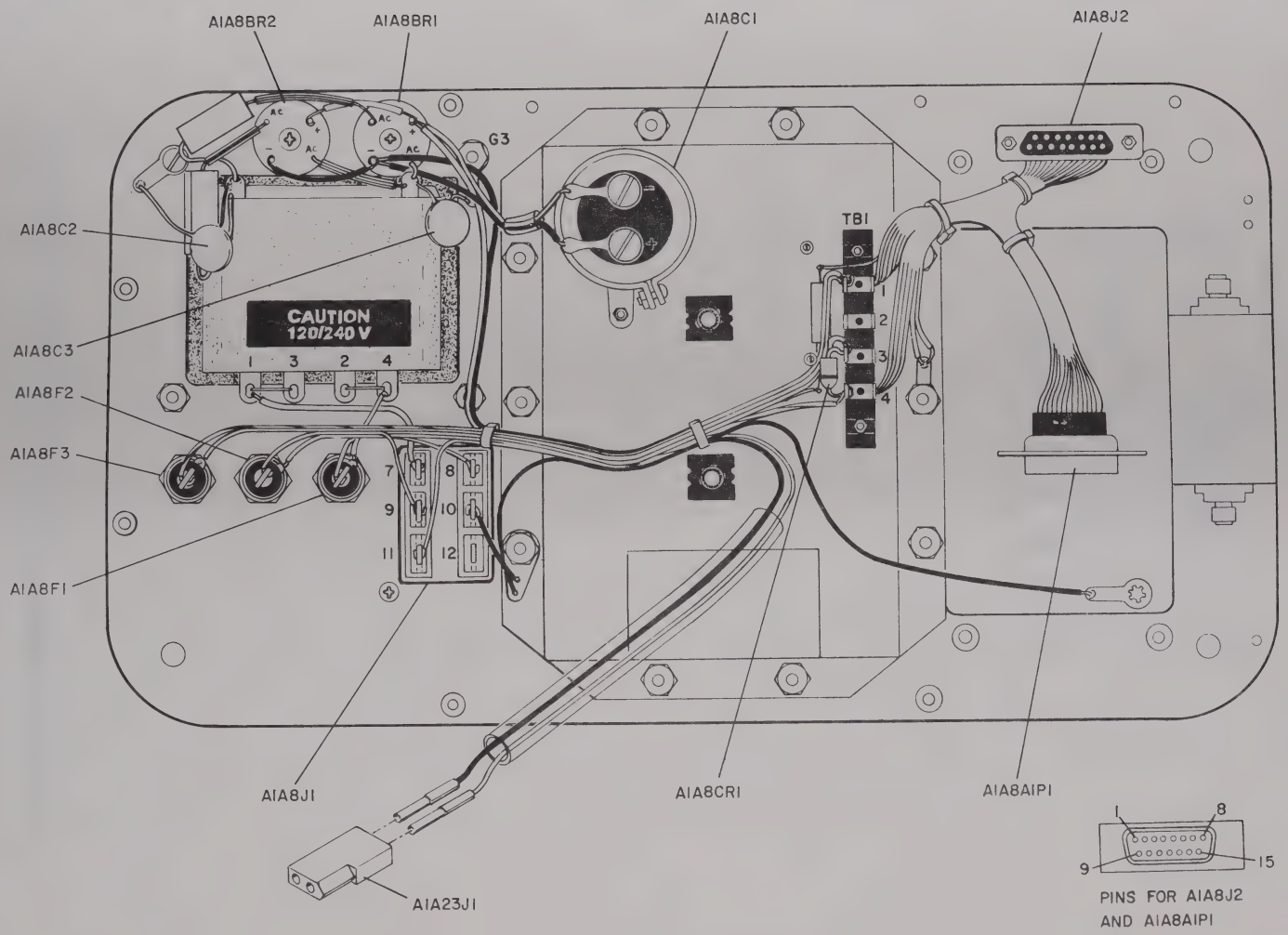

Figure 5-21. Rear panel A1A8 component location diagram

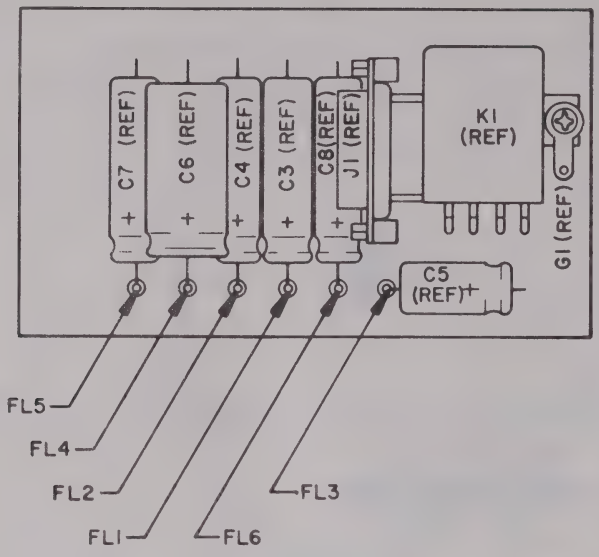

Figure 5-22. Duty cycle regulator A1A8A1 component location diagram

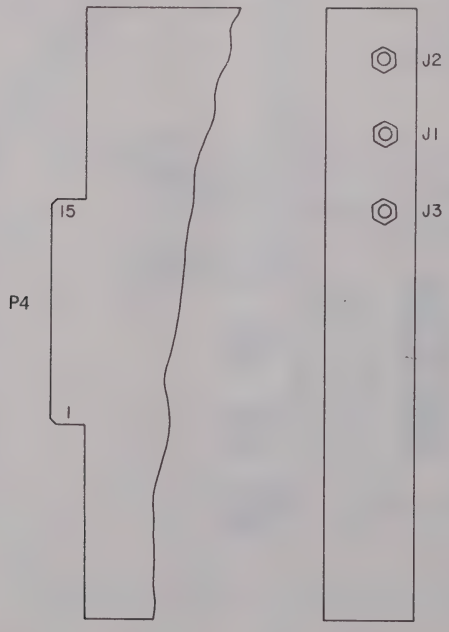

Figure 5-23. High frequency phase lock loop A1A9 component location diagram

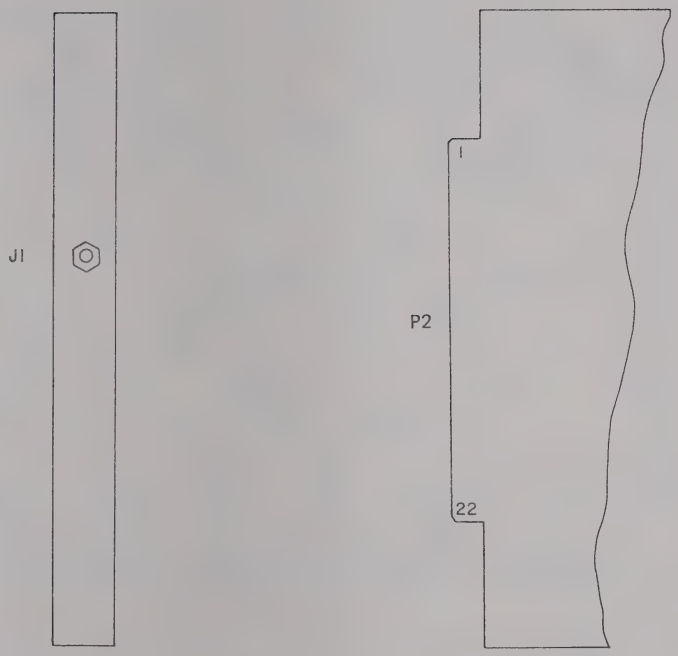

Figure 5-24. 79-80 MHz loop A1A10 component location diagram

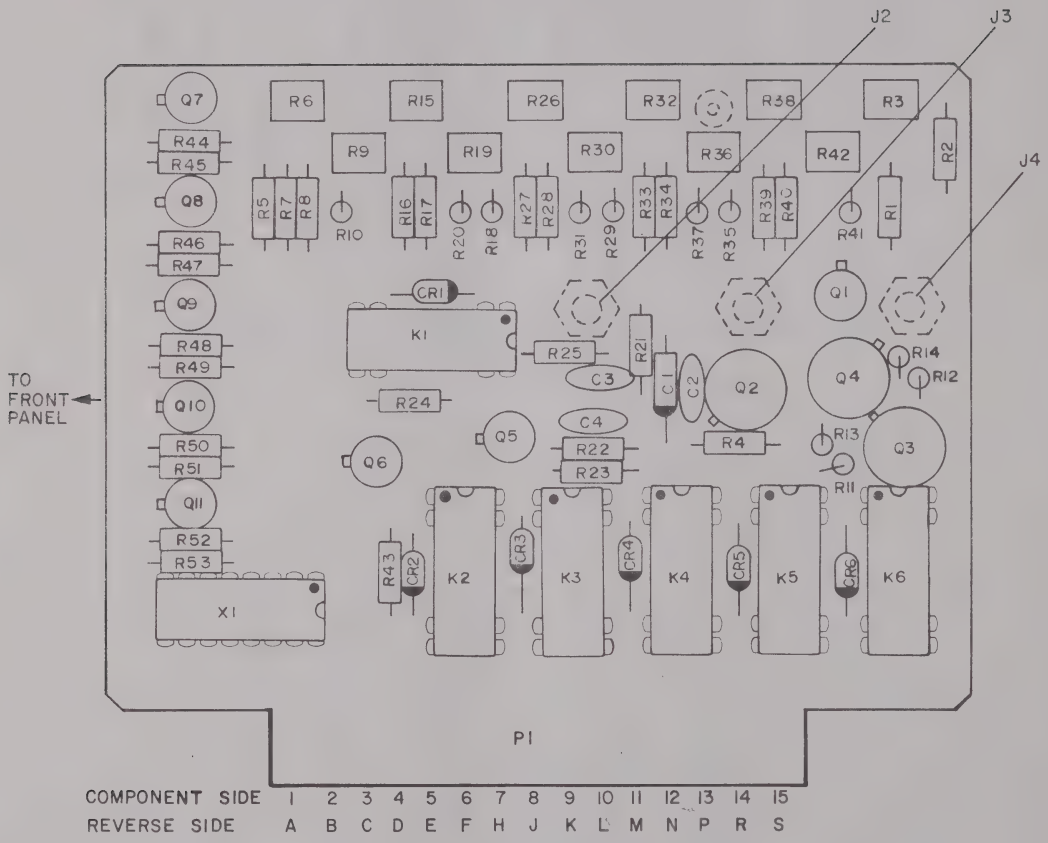

Figure 5-25. VCO tumer A1A11 component location diagram

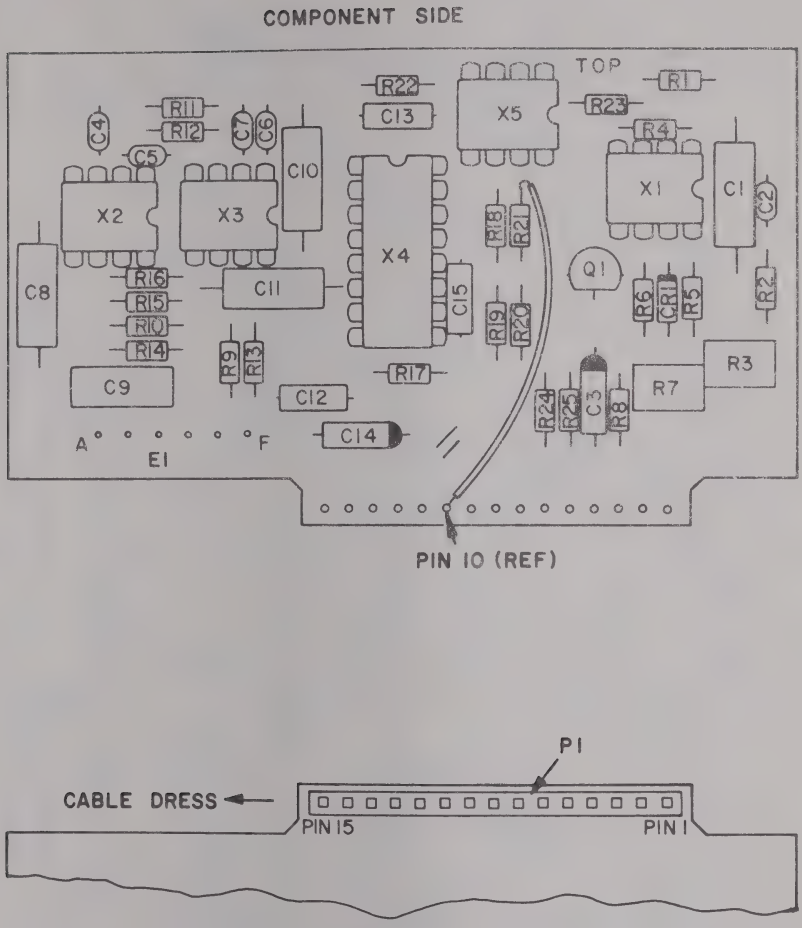

Figure 5-26. Dual tone generator A1A12 component location diagram

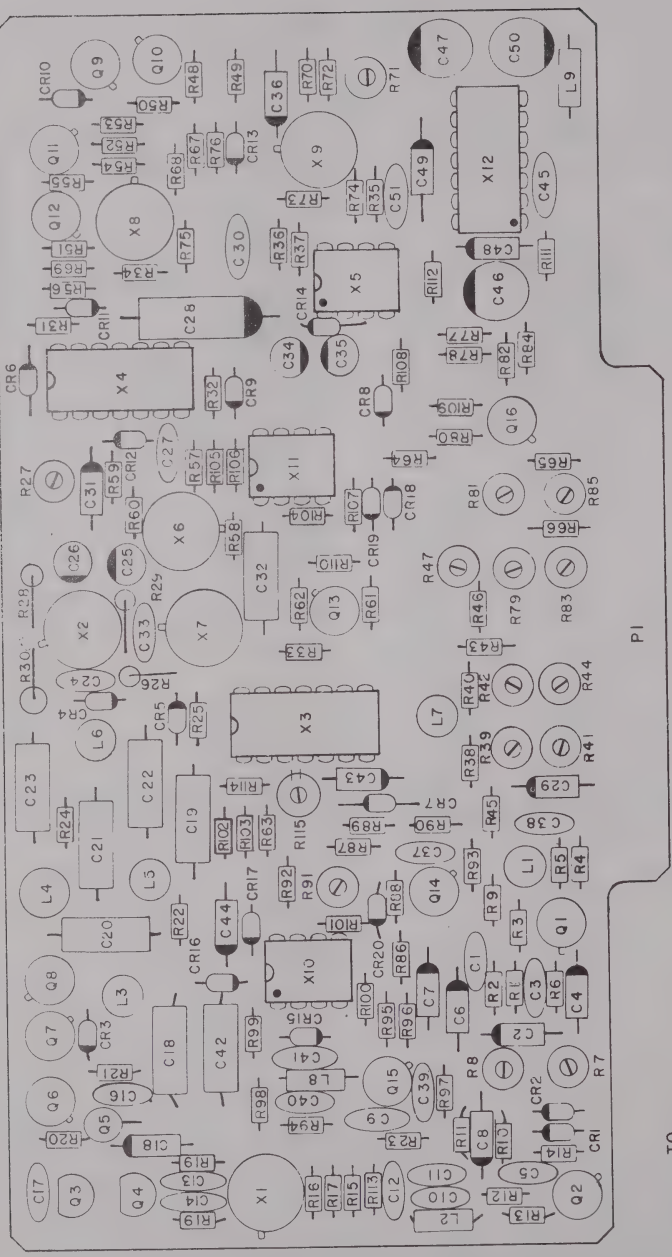

Figure 5-27. 250 kHz I.F. monitor audio circuit board A1A13 component location diagram

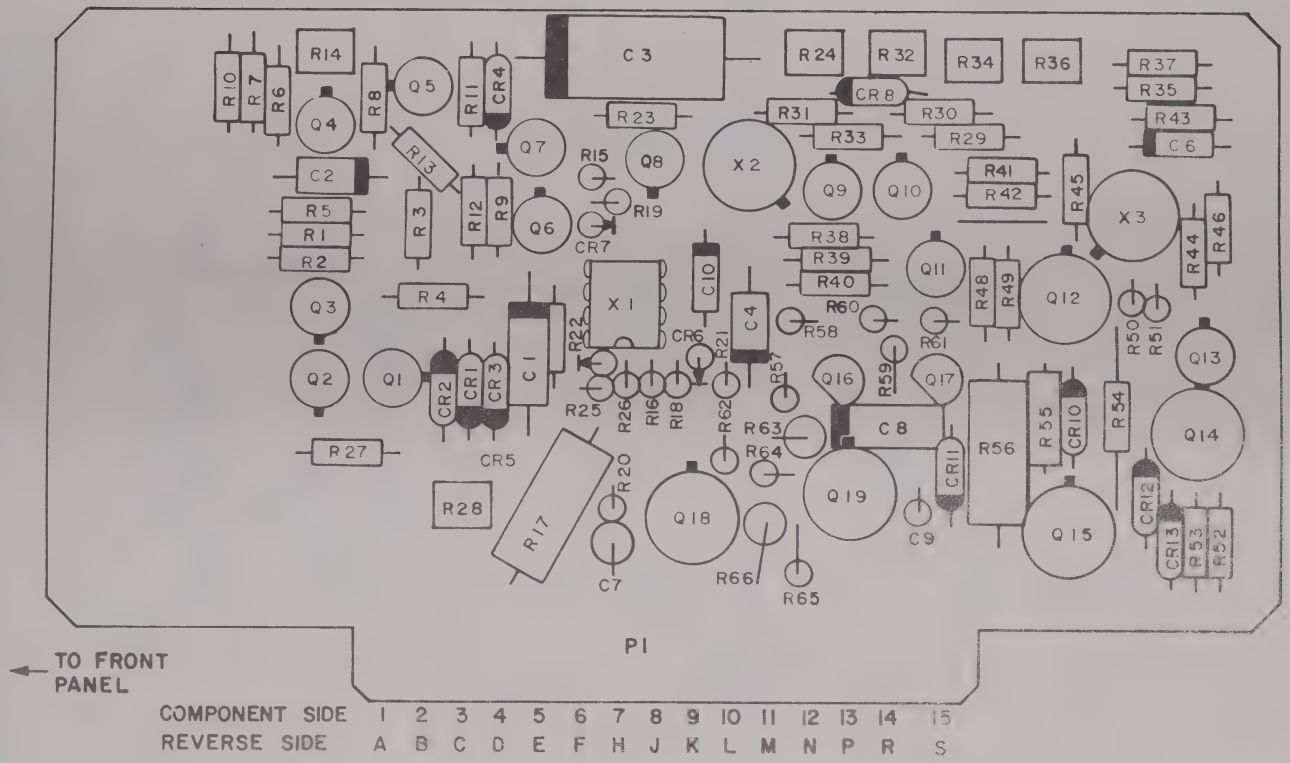

Figure 5-28. Regulator and power supply A1A14 component location diagram

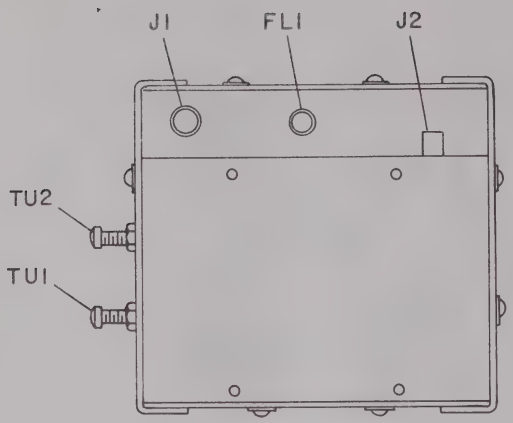

Figure 5-29. 1080 MHz multiplier amplifier A1A15 component location diagram

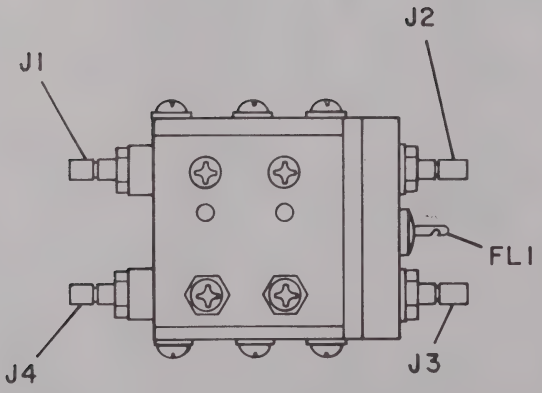

Figure 5-30. 1200 MHz diode switch A1A16 component location diagram

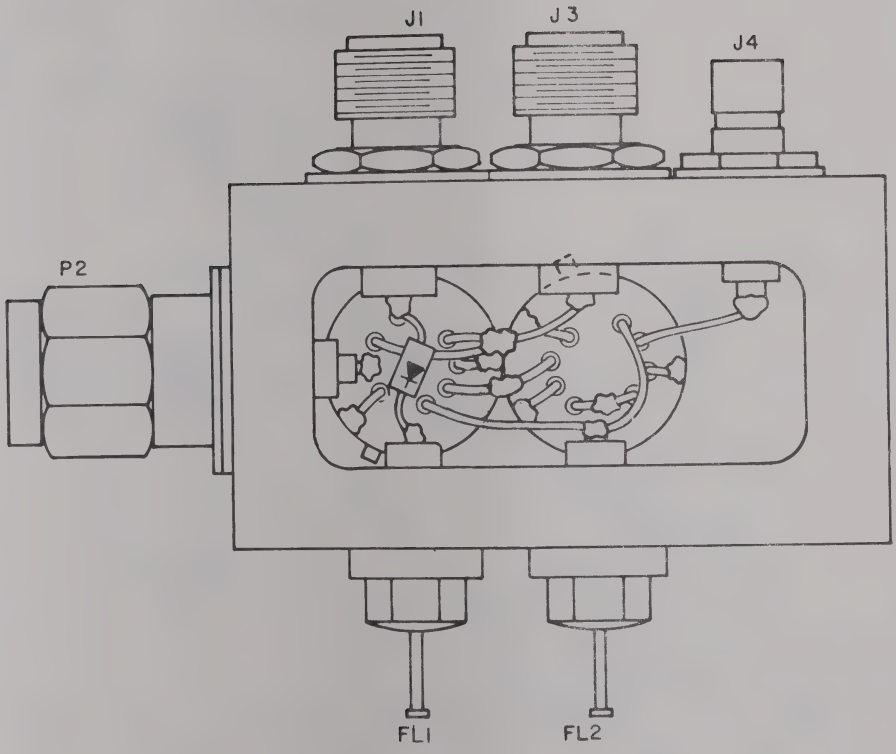

Figure 5-31. Power monitor A1A17 component location diagram

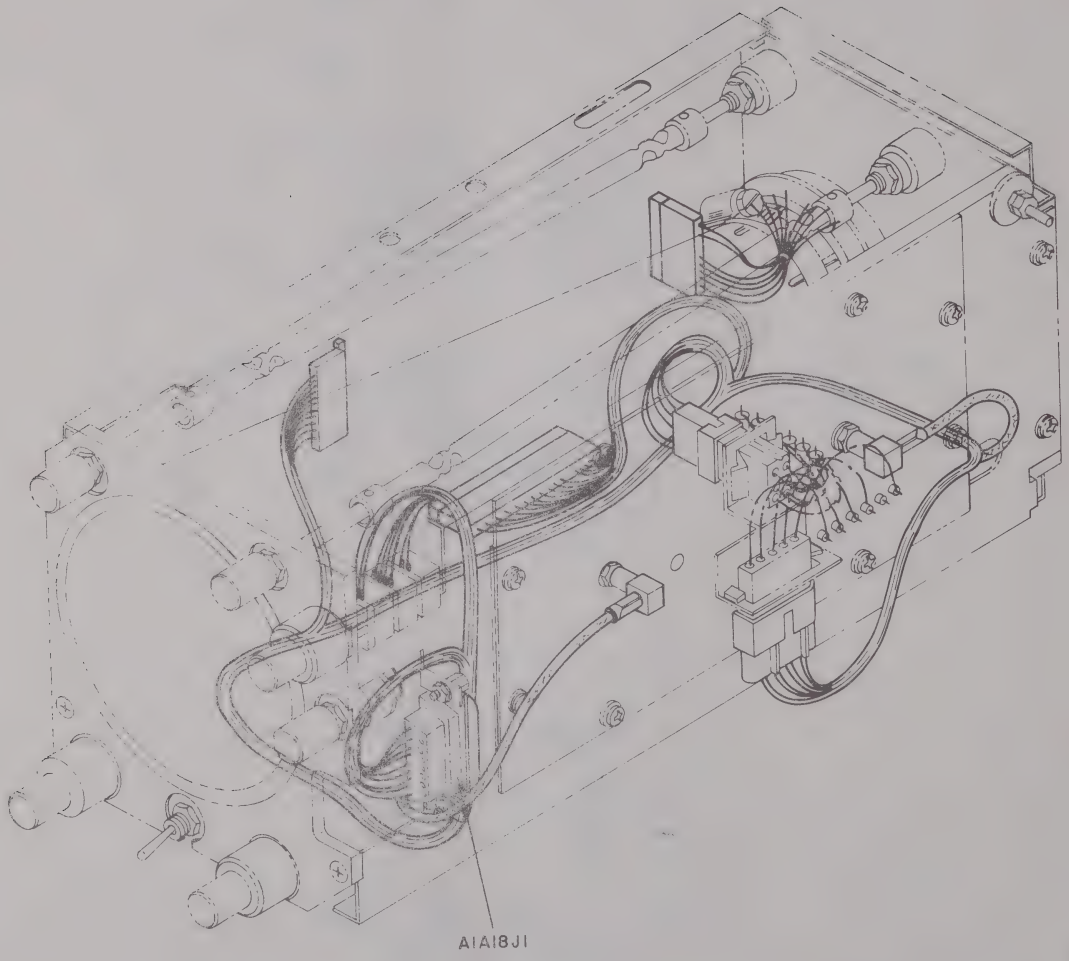

Figure 5-32. Spectrum analyzer A1A18 component location diagram

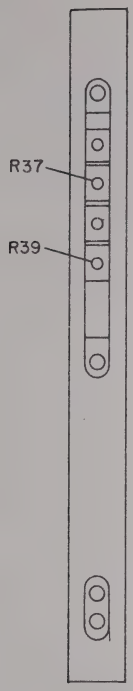

Figure 5-33. Spectrum analyzer module no. 1 A1A18A1 component location diagram

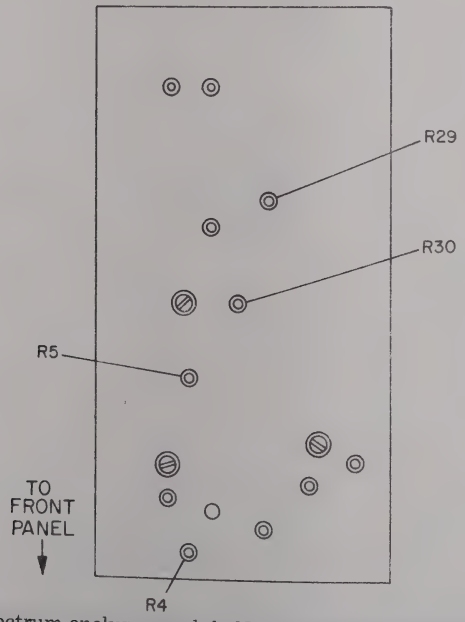

Figure 5-34. Spectrum analyzer module No. 2 A1A18A3 component location diagram

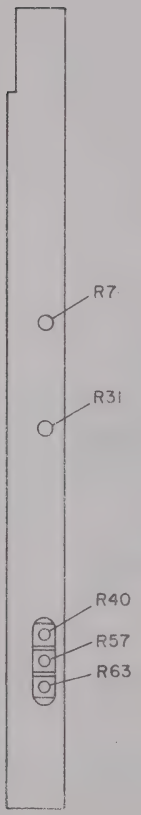

Figure 5-35. Oscilloscope main circuit board A1A18A4 component location diagram

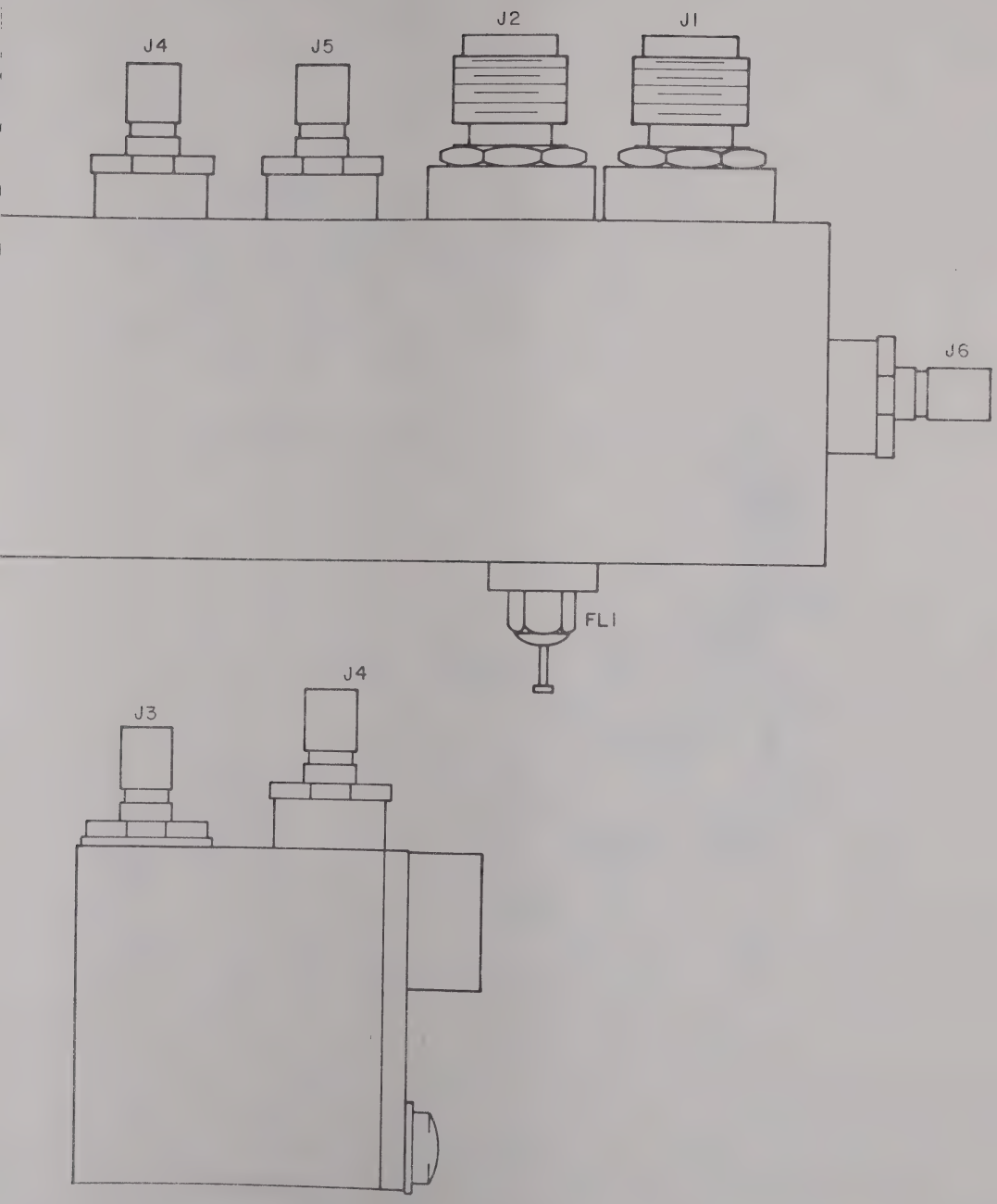

Figure 5-36. 1st mixer A1A19 component location diagram

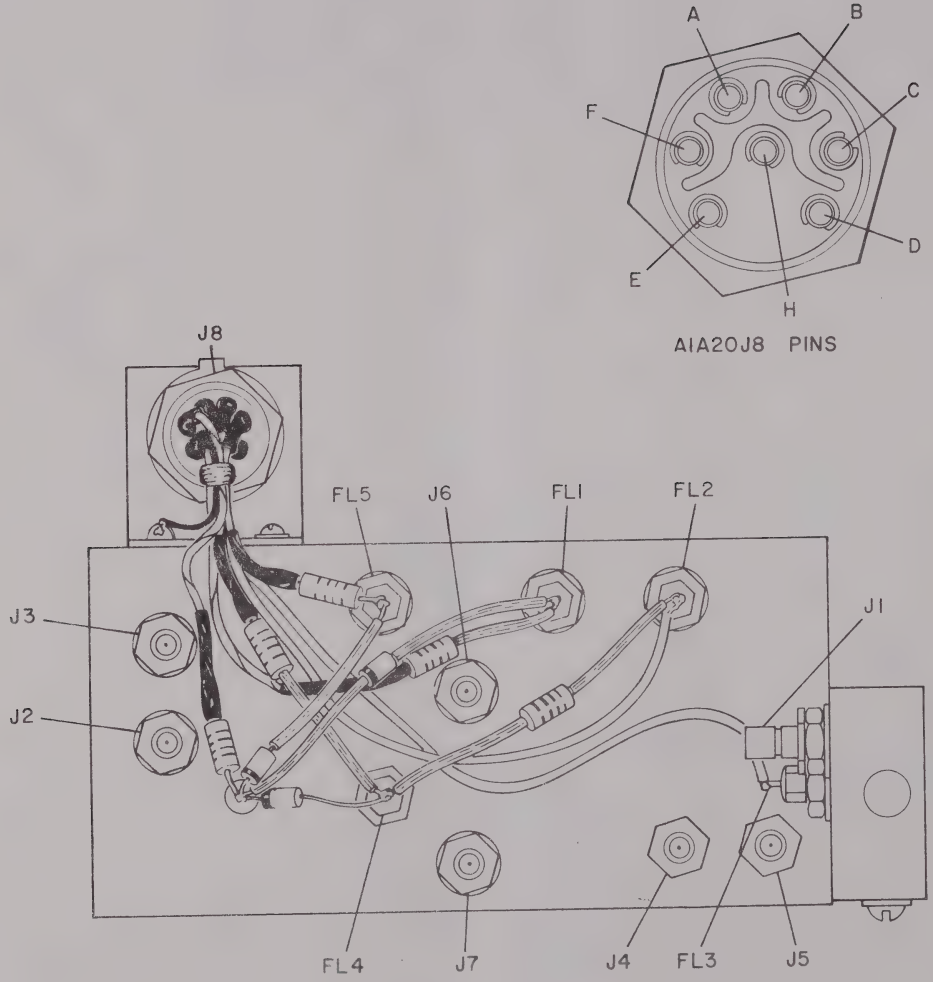

Figure 5-37. 2nd mixer A1A20 component location diagram

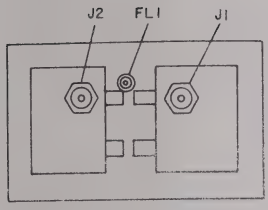

Figure 5-38. 100 MHz filter A1A21 component location diagram

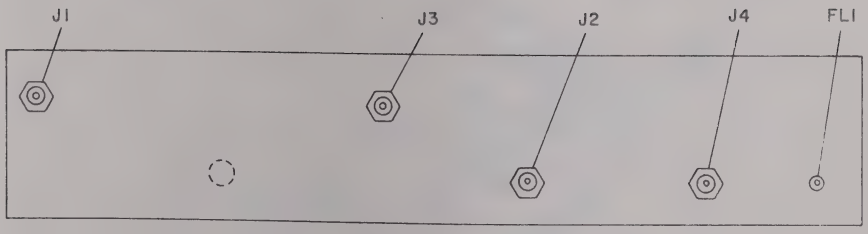

Figure 5-39. 100 MHz amplifier/108 MHz mixer A1A24A1 component location diagram

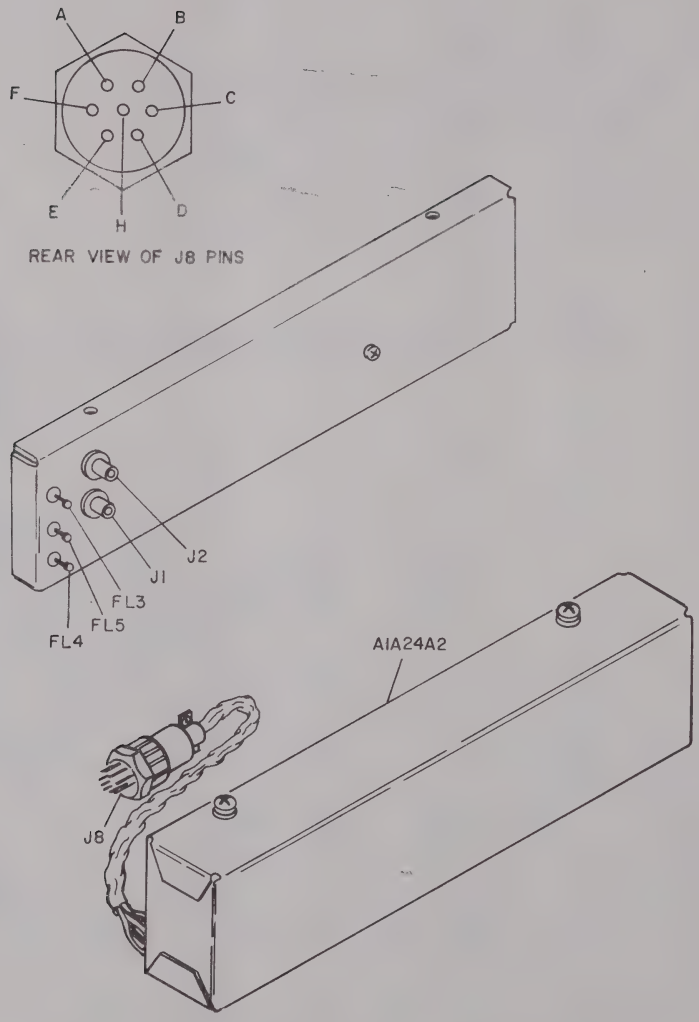

Figure 5-40. 120 MHz receiver A1A24A2 component location diagram

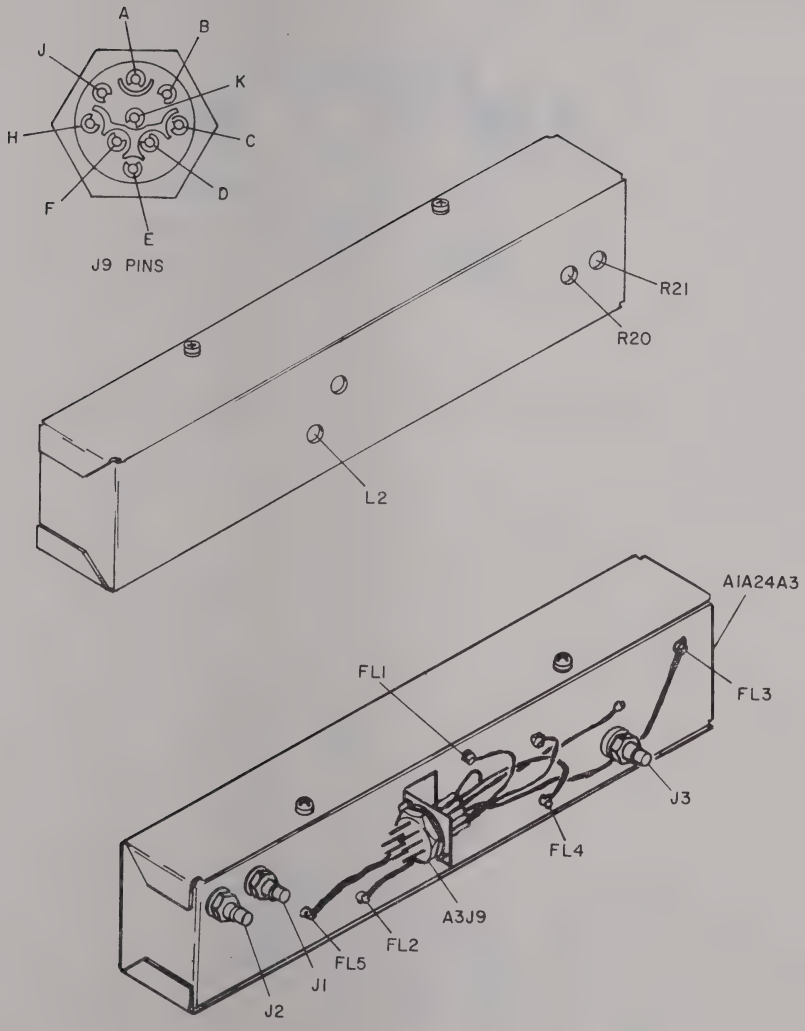

Figure 5-41. FM/AM generator A1A24A3 component location diagram

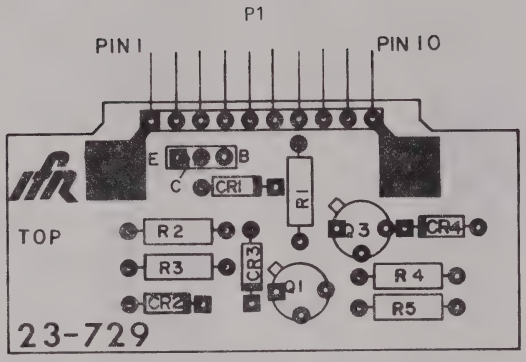

Figure 5-42. Relay driver A1A25 component location diagram

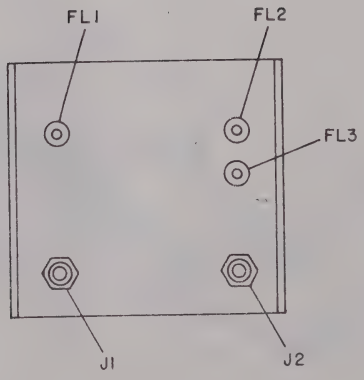

Figure 5-43. High level amplifier A1A28 component location diagram

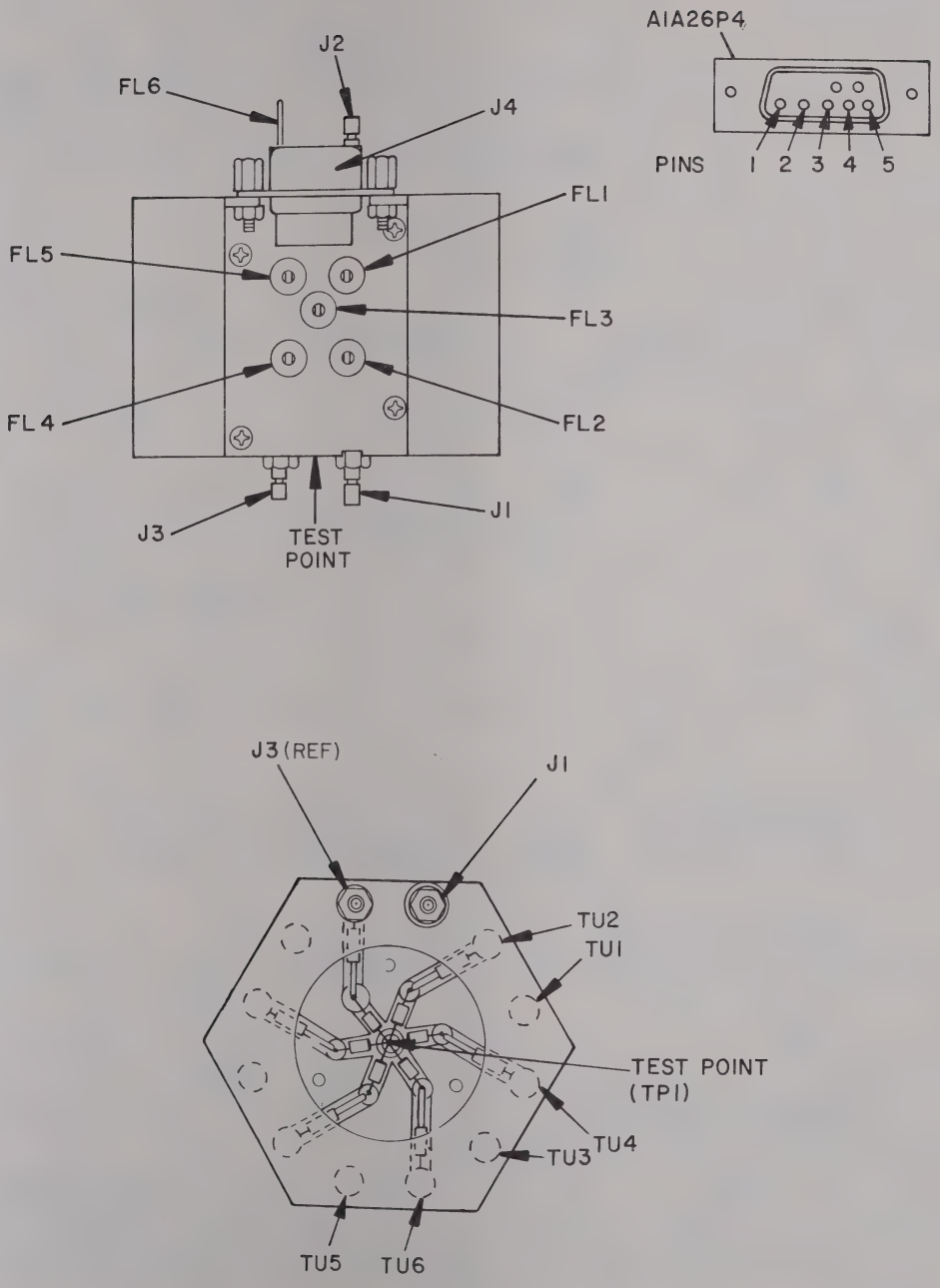

Figure 5-44. High frequency multiplier/mixer A1A26 component location diagram

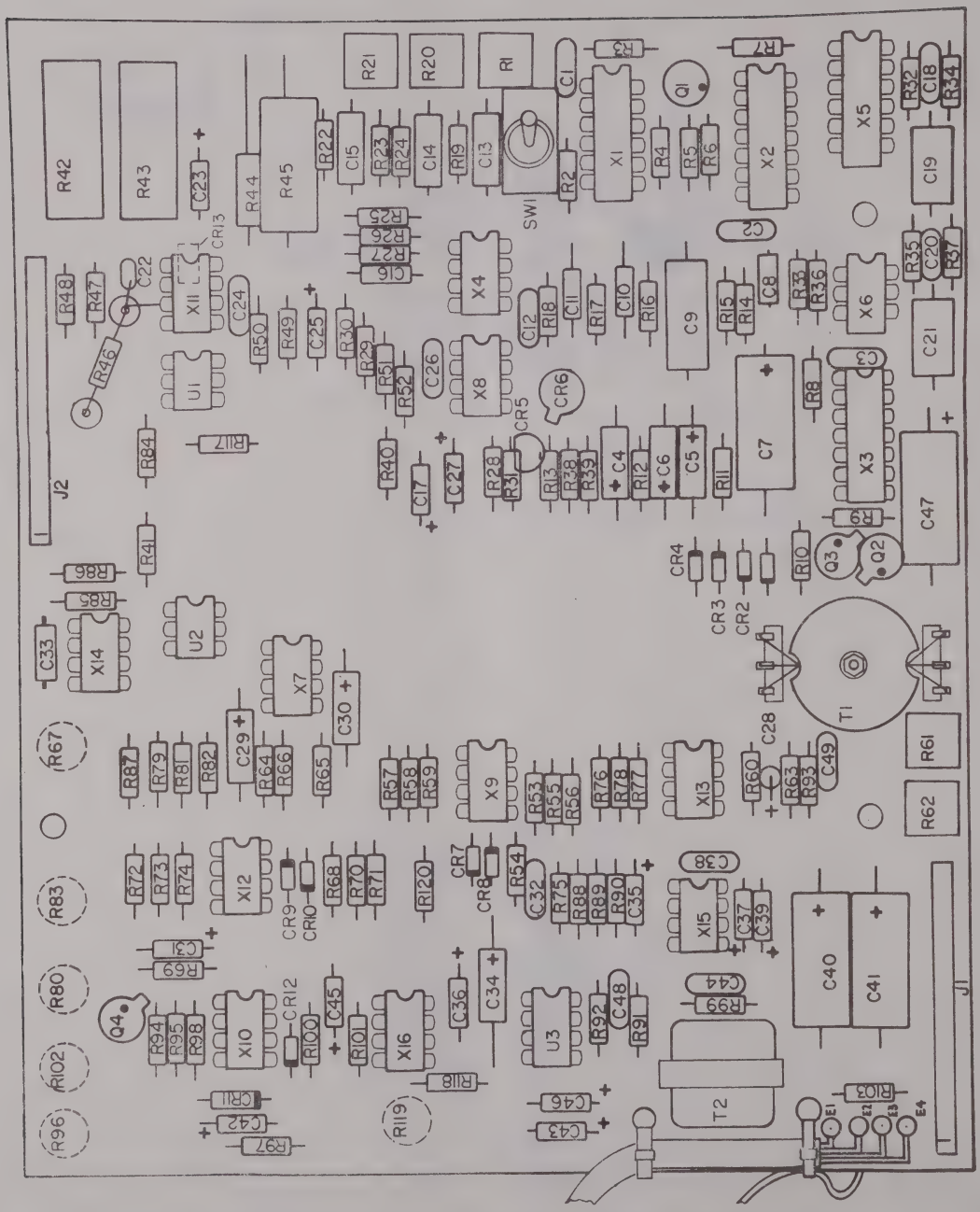

Figure 5-45. MM-100 assembly A2A1A1

Table 5-13. Disassembly Sequence

Module to be removed	Module disassembly steps	Modules which must be removed first	Module removal steps
Heterodyne Amplifier ÷2 Prescaler (A1A3A1)	d. (2)-(5)	Case Swing Upper Floor out	c. (1)-(6) d. (1)
1200-2200 MHz Oscillator (A1A3A2)	d. (6)-(10)	Case Swing Upper Floor out AGC Circuit Board	c. (1)-(6) d. (1) d. (8)-(9)
AGC Circuit Board (A1A3A3)	d. (8)-(9)	Case Swing Upper Floor out	c. (1)-(6) d. (1)
TCXO Master Oscillator (A1A3U1)	d. (11)-(14)	Case Swing Upper Floor out	c. (1)-(6) d. (1)
TCXO Master Oscillator Output Distribution Amplifier (A1A3A5)	d. (15)-(17)	Case Swing Upper Floor out	c. (1)-(6) d. (1)
Clock Divider (A1A3A4)	d. (18)-(20)	Case Swing Upper Floor out	c. (1)-(6) d. (1)
2nd Mixer (A1A20)	e. (1)-(4)	Case Swing Upper Floor out	c. (1)-(6) d. (1)
100 MHz Filter (A1A21)	e. (5)-(9)	Case	c. (1)-(6)
Speaker	e. (10)-(13)	Case	c. (1)-(6)
1st Mixer (A1A19)	e. (14)-(17)	Case Swing Upper Floor out	c. (1)-(6) d. (1)
1200 MHz Diode Switch (A1A16)	e. (18)-(23)	Case 100 MHz Filter	c. (1)-(6) e. (5)-(9)
High Frequency Multiplier/ Mixer (A1A26)	e. (25)-(29)	Case Capacitor A1A8C1	c. (1)-(6) e. (24)
Regulator and Power Supply Circuit Board (A1A14)	f. (1)-(3)	Case Swing Upper Floor out Capacitor A1A8C1	c. (1)-(6) d. (1) e. (24)
VCO Tuner Circuit Board (A1A11)	f. (4)-(7)	Case Swing Upper Floor out	c. (1)-(6) d. (1)
High Frequency Phase Lock Assembly (A1A9)	f. (8)-(10)	Case Swing Upper Floor out	c. (1)-(6) d. (1)

Table 5-13. Disassembly Sequence — Continued

Module to be removed	Module disassembly steps	Modules which must be removed first	Module removal steps
79-80 MHz Loop Assembly (A1A10)	f. (11)-(13)	Case	c. (1)-(6)
		Swing Upper Floor out	d. (1)
250 kHz I.F. Monitor Audio Circuit Board (A1A13)	f. (14)-(16)	Case	c. (1)-(6)
		Swing Upper Floor out	d. (1)
		1st Mixer	e. (14)-(17)
1080 MHz Multiplier Amplifier (A1A15)	f. (17)-(20)	Case	c. (1)-(6)
		Swing Upper Floor out	d. (1)
		2nd Mixer	e. (1)-(4)
		1st Mixer	e. (14)-(17)
		250 kHz I.F. Monitor Audio Circuit Board	f. (14)-(16)
1200 MHz Amplifier (A1A6)	f. (21)-(24)	Case	c. (1)-(6)
		Swing Upper Floor out	d. (1)
		2nd Mixer	e. (1)-(4)
		1st Mixer	e. (14)-(17)
		250 kHz I.F. Monitor Audio Circuit Board	f. (14)-(16)
		1080 MHz Multiplier Amplifier	f. (17)-(20)
High Level Amplifier (A1A28)	f. (25)-(28)	Case	c. (1)-(6)
		Swing Upper Floor out	d. (1)
		1st Mixer	e. (14)-(17)
		Semi-rigid coax cables from 1200 MHz Diode Switch	e. (19)
Static Discharge Protector (A1A7)	f. (29)-(32)	Case	c. (1)-(6)
		Speaker	e. (10)-(13)
108 MHz Bandpass Filter (A1A5)	f. (33)-(35)	Case	c. (1)-(6)
Relay Driver (A1A25)	f. (36)-(37)	Case	c. (1)-(6)
		108 MHz Bandpass Filter	f. (33)-(35)
FM/AM Generator (A1A24A3)	g. (3)-(6)	Case	c. (1)-(6)
		Swing Lower Floor out	g. (1)-(2)
100 MHz Amplifier/ 108 MHz Mixer (A1A24A1)	g. (7)-(10)	Case	c. (1)-(6)
		Swing Lower Floor out	g. (1)-(2)
		FM/AM Generator	g. (3)-(6)

Table 5-13. Disassembly Sequence — Continued

Module to be removed	Module disassembly steps	Modules which must be removed first	Module removal steps
120 MHz Receiver (A1A24A2)	g. (11)-(14)	Case	c. (1)-(6)
		Swing Lower Floor out	g. (1)-(2)
		FM/AM Generator	g. (3)-(6)
		100 MHz Amplifier/108 MHz Mixer	g. (7)-(10)
Duty Cycle Regulator (A1A8A1)	h. (1)-(4)	Case	c. (1)-(6)
		Swing Upper Floor out	d. (1)
Transmitter Sensor (A1A4)	h. (5)-(8)	Case	c. (1)-(6)
20 dB Pad (A1A8AT1)	h. (9)-(12)	Case	c. (1)-(6)
		Swing Upper Floor out	d. (1)
		Duty Cycle Regulator	h. (1)-(4)
		Transmitter Sensor	h. (5)-(8)
Power Monitor (A1A17)	h. (13)	Case	c. (1)-(6)
		Swing Upper Floor out	d. (1)
		Duty Cycle Regulator	h. (1)-(4)
		Transmitter Sensor	h. (5)-(8)
		20 dB Pad	h. (9)-(12)
Battery Modified Mechanical Assembly (A1A23)	h. (14)-(16)	Case	c. (1)-(6)
		Swing Upper Floor out	d. (1)
Transformer	h. (17)-(19)	Case	c. (1)-(6)
Spectrum Analyzer Assembly (A1A18)	i. (4)-(11)	Case	c. (1)-(6)
		Swing Upper Floor out	d. (1)
		Tilt Front Panel forward	i. (1)-(3)
Dual Tone Generator (A1A12)	i. (12)-(14)	Case	c. (1)-(6)
		Swing Upper Floor out	d. (1)
		Tilt Front Panel forward	i. (1)-(3)
		Spectrum Analyzer Assembly	i. (4)-(11)
FREQ. ERROR (KHz) meter	i. (15)-(17)	Case	c. (1)-(6)
		Swing Upper Floor out	d. (1)
Frequency Select Switch Assembly (FREQUENCY MHz Thumbwheels) (A1A27)	i. (18)-(20)	Case	c. (1)-(6)
		Swing Upper Floor out	d. (1)
		FREQ. ERROR (KHz) Meter	i. (15)-(17)
		Tilt Front Panel forward	i. (1)-(3)
DEVIATION (KHz)/ WATTS meter	i. (21)-(23)	Case	c. (1)-(6)
		Swing Upper Floor out	d. (1)
		2nd Mixer	e. (1)-(4)

Table 5-13. Disassembly Sequence — Continued

Module to be removed	Module disassembly steps	Modules which must be removed first	Module removal steps
ANT INPUT connector	i. (24)-(25)	Case	c. (1)-(6)
		Swing Upper Floor out	d. (1)
		Tilt Front Panel forward	i. (1)-(3)
DEV/PWR control	i. (26)-(29)	Case	c. (1)-(3)
		Swing Upper Floor out	d. (1)
		Tilt Front Panel forward	i. (1)-(3)
		FREQ. ERROR (KHz) Meter	i. (15)-(17)
HI LVL/μV x 100/NORM switch	i. (30)-(32)	Case	c. (1)-(3)
		Speaker	e. (10)-(13)
AUTO/OFF/ZERO, BATT switch	i. (33)-(35)	Case	c. (1)-(3)
		Speaker	e. (10)-(13)
RF LEVEL/BFO INJECTION Dial Assembly	i. (36)-(41)	Case	c. (1)-(3)
		Swing Upper Floor out	d. (1)
		Tilt Front Panel forward	i. (1)-(3)
		Speaker	e. (10)-(13)
TRANS/RCVR connector	i. (42)-(43)	Case	c. (1)-(3)
		Disconnect semi-rigid coax cable from TRANS/RCVR connector	i. (2)
PWR/OFF/BATT switch	i. (44)-(47)	Case	c. (1)-(3)
ZERO/RCVR switch	i. (48)-(50)	Case	c. (1)-(3)
		Swing Upper Floor out	d. (1)
		Tilt Front Panel forward	i. (1)-(3)
		FREQ. ERROR (KHz) meter	i. (15)-(17)
		DEV/PWR Control	i. (26)-(29)
GEN/RCVR switch	i. (51)-(53)	Case	c. (1)-(3)
		Swing Upper Floor out	d. (1)
		Tilt Front Panel forward	i. (1)-(3)
		FREQ. ERROR (KHz) Meter	i. (15)-(17)
		DEV/PWR Control	i. (26)-(29)
		ZERO/RCVR Switch	i. (48)-(50)
RCVR WIDE/MID/NARROW switch	i. (54)-(56)	Case	c. (1)-(3)
		Swing Upper Floor out	d. (1)
		Tilt Front Panel forward	i. (1)-(3)
		FREQ. ERROR (KHz) Meter	i. (15)-(17)
		DEV/PWR Control	i. (26)-(29)
		ZERO/RCVR Switch	i. (48)-(50)
		GEN/RCVR Switch	i. (51)-(53)

Table 5-13. Disassembly Sequence — Continued

Module to be removed	Module disassembly steps	Modules which must be removed first	Module removal steps
10 MHz REF OUT connector	i. (57)-(58)	Case	c. (1)-(3)
		Disconnect coax cable from 10 MHz REF OUT connector	i. (2)
SQUELCH control	i. (59)-(62)	Case	c. (1)-(3)
		Swing Upper Floor out	d. (1)
		Tilt Front Panel forward	i. (1)-(3)
		FREQ. ERROR (KHz) Meter	i. (15)-(17)
		Frequency Select Switch Assembly (FREQUENCY MHz Thumbwheels)	i. (18)-(20)
EXT SPKR connector	i. (63)-(65)	Case	c. (1)-(3)
VOL control	i. (66)-(69)	Case	c. (1)-(3)
		Swing Upper Floor out	d. (1)
		Tilt Front Panel forward	i. (1)-(3)
		FREQ. ERROR (KHz) Meter	i. (15)-(17)
		Frequency Select Switch Assembly (FREQUENCY MHz Thumbwheels)	i. (18)-(20)
INT MOD/RCVR switch	i. (70)-(72)	Case	c. (1)-(3)
AM/FM switch	i. (73)-(75)	Case	c. (1)-(3)
		Swing Upper Floor out	d. (1)
		Tilt Front Panel forward	i. (1)-(3)
		FREQ. ERROR (KHz) Meter	i. (15)-(17)
		Frequency Select Switch Assembly (FREQUENCY MHz Thumbwheels)	i. (18)-(20)
BFO/OFF switch	i. (76)-(78)	Case	c. (1)-(3)
EXT MOD connector	i. (79)-(81)	Case	c. (1)-(3)
		Swing Upper Floor out	d. (1)
		Tilt Front Panel forward	i. (1)-(3)
		FREQ. ERROR (KHz) Meter	i. (15)-(17)
		Frequency Select Switch Assembly (FREQUENCY MHz Thumbwheels)	i. (18)-(20)
EXT ACC connector	i. (82)-(84)	Case	c. (1)-(3)
INT MOD OUT connector	i. (85)-(87)	Case	c. (1)-(3)
1 KHz INT MOD and INT MOD controls	i. (88)-(92)	Case	c. (1)-(3)
		Swing Upper Floor out	d. (1)
		Tilt Front Panel forward	i. (1)-(3)
		Spectrum Analyzer Assembly	i. (4)-(11)
		Dual Tone Generator	i. (12)-(14)

Table 5-13. Disassembly Sequence — Continued

Module to be removed	Module disassembly steps	Modules which must be removed first	Module removal steps
SCOPE IN connector	i. (93)-(94)	Case	c. (1)-(3)
		Disconnect coax cable from SCOPE IN connector	i. (2)
1.5/5/15 KHz control	i. (95)-(99)	Case	c. (1)-(3)
		Swing Upper Floor out	d. (1)
		Tilt Front Panel forward	i. (1)-(3)
		Spectrum Analyzer Assembly	i. (4)-(11)
CAL adjustment	i. (100)-(101)	Case	c. (1)-(3)
Phase Lock Lamps	i. (102)-(109)	Case	c. (1)-(3)
		Swing Upper Floor out	d. (1)
		Tilt Front Panel forward	i. (1)-(3)
		FREQ. ERROR (KHz) Meter	i. (15)-(17)
INPUT LEVEL lamp	i. (110)-(113)	Case	c. (1)
		Swing Upper Floor out	d. (1)
		ANT INPUT connector	i. (2), (24)-(25)
ON lamp	i. (114)-(117)	Case	c. (1)-(3)
		PWR/OFF/BATT Switch	i. (44)-(47)
0 dBm lamp	i. (118)-(121)	Case	c. (1)-(3)
		Speaker	e. (10)-(13)
MM-100 (Multimeter) Circuit Board	j. (5)-(10)	Remove MM-100 case from AN/GRM-114 case	c. (1)
		MM-100 Composite Assembly	j. (1)-(4)

c. *Case Removal.*

(1) Unlock two latches which lock multimeter case to AN/GRM-114 case. Slide multimeter case off AN/GRM-114 case.

(2) Remove four Phillips screws and four washers which secure black rectangular frame to four standoffs on rear panel. Remove frame from standoffs.

(3) Remove eight Phillips screws and eight flat washers which secure case to rear panel.

(4) Remove one Phillips screw which secures case to top of front panel.

(5) Remove one Phillips screw which secures case to bottom of front panel.

(6) Slide case away from front panel, off AN/GRM-114.

d. *Removal of Assemblies from Upper Floor.*

(1) Remove two Phillips screws (1) and two washers (2) which secure Upper Floor Assembly (3) to frame support members (4) and (129) (figure 5-46). Swing out Upper Floor Assembly.

(2) Tag and unsolder wires from feed-thru capacitors of Heterodyne Amplifier ÷2 Prescaler (5) (figure 5-48).

(3) Tag and disconnect coax cables from assembly (5) (figure 5-48).

(4) Remove two Phillips screws (2), two lockwashers (3), and two spacers (4) which secure assembly (5) to Upper Floor (6) (figure 5-48).

(5) Remove assembly (5) from Upper Floor (6) (figure 5-48).

(6) Tag and unsolder wires from feed-thru capacitor of 1200-2200 MHz Oscillator (11) (figure 5-48).

(7) Tag and disconnect coax cables from assembly (11) (figure 5-48).

(8) Remove two 5/16" Phillips screws (7) and two lockwashers (8) from AGC PCB mounting bracket (9) (figure 5-48).

(9) Remove bracket (9) with AGC PCB (10) from 1200-2200 MHz Oscillator Assembly (11) (figure 5-48).

(10) Remove four Phillips screws (1), four lockwashers (36) which secure assembly (11) to Upper Floor (6) (figure 5-48).

(11) Remove two hex nuts (16), one lockwasher (17), and one ground lug (18) which secure TCXO mounting bracket (15) to TCXO Master Oscillator (13) (figure 5-48).

(12) Remove TCXO (13) from mounting bracket (15) (figure 5-48).

(13) Disconnect Connector (14) from TCXO (13).

(14) Tag and disconnect coax cable from TCXO (13) (figure 5-48).

(15) Tag and unsolder wire from feed-thru capacitor of TCXO Output Distribution Amplifier (21) (figure 5-48).

(16) Tag and disconnect coax cables from assembly (21) (figure 5-48).

(17) Remove two 1/4" Phillips screws (19), and two lockwashers (20) which secure assembly (21) to Upper Floor (6) (figure 5-48).

(18) Disconnect mating connector from connector (23) on clock divider (22) (figure 5-48).

(19) Tag and disconnect coax cables from assembly (22).

(20) Remove two 1/4" Phillips screws (24), two lockwashers (25), and two flatwashers (26) which secure assembly (22) to Upper Floor (6) (figure 5-48).

e. *Removal of Assemblies from Frame Support Members.*

(1) Remove two 3/8" Phillips screws (23) which secure Second Mixer Assembly (24) to frame support member (25) (figure 5-46).

(2) Remove assembly (24) from frame support member (25) (figure 5-46).

(3) Unplug mating connector from connector (26) on assembly (24) (figure 5-46).

(4) Tag and disconnect coax cables from assembly (24) (figure 5-46).

(5) Remove two Phillips screws (75) and two washers (76) which secure mounting angle (77) to 1200 MHz Diode Switch/High Frequency Multiplier Mixer mounting bracket (30) (figure 5-46).

(6) Tag and disconnect coax cables from 100 MHz Filter assembly (37) (figure 5-46).

(7) Tag and unsolder wire from feed-thru capacitor on assembly (37) (figure 5-46).

(8) Remove two screws (78) and two washers (79) which secure 100 MHz Filter (37) to mounting angle (77).

(9) Remove assembly (37) from AN/GRM-114.

(10) Remove one 1/2" Phillips screw (42) and one lockwasher (43) to disconnect frame support member (25) from front panel (44) (figure 5-46).

(11) Remove one 1/4" Phillips screw (38) and one lockwasher (39), and one 1/2" Phillips screw (40) and one lockwasher (39) which secure Speaker Assembly/Plate Retainer (41) to frame support member (25) (figure 5-46).

(12) Unsolder wires from speaker.

(13) Remove Speaker Assembly/Plate Retainer (41) from frame support member (25) (figure 5-46).

(14) Tag and disconnect coax cables from First Mixer Assembly (45) (figure 5-46).

(15) Tag and unsolder wire from feed-thru capacitor on assembly (45) (figure 5-46).

(16) Remove three 7/16" Phillips screws (46) which secure assembly (45) to frame support member (25) (figure 5-46).

(17) Remove assembly (45) from frame support member (25) (figure 5-46).

(18) Use an Allen wrench to remove two 5/8" socket head screws (47) and two spacers (48) which hold 1200 MHz Filter/Diode Switch Assembly (49) to mounting bracket (30) (figure 5-46).

(19) Tag and disconnect two semi-rigid coax cables from assembly (49) (figure 5-46).

NOTE

Use extreme care so as not to kink cables.

(20) Tag and unsolder wire from feed-thru capacitor on assembly (49) (figure 5-46).

(21) Remove two Phillips screws (50) which hold straps for two remaining coax cables.

(22) Tag and disconnect two remaining coax cables from assembly (49) (figure 5-46).

(23) Remove assembly from AN/GRM-114.

(24) Discharge capacitor A1A8C1 (7). Then loosen one slotted screw in capacitor mounting clamp (5). Remove

capacitor from mounting clamp (figure 5-46).

(25) Remove 7½ A BATT fuse from fuseholder on rear panel of AN/GRM-114.

(26) Tag and disconnect coax cables from High Frequency Multiplier/Mixer Assembly (51) (figure 5-46).

(27) Unplug mating connector from connector on assembly (51) (figure 5-46).

(28) Use an Allen wrench to remove four socket head screws which hold assembly (51) to mounting bracket (30) (figure 5-46).

(29) Remove assembly (51) from mounting bracket (30) (figure 5-46).

f. *Removal of Assemblies from Mother Board.*

(1) Remove two 1/4" Phillips screws (151) and two lockwashers (152) which secure Regulator Power Supply Circuit Board retainer (8) to frame support member (129) (figure 5-46).

(2) Remove Circuit board retainer (8) from frame support member (129) (figure 5-46).

(3) Remove Regulator Power Supply PCB (10) from Mother Board (12) (figure 5-46).

(4) Loosen one Phillips screw (13) on top of standoff (14) which secures VCO PCB retainer (15) to standoff (14) (figure 5-46).

(5) Move retainer (15) out of the way to allow removal of VCO PCB (16) (figure 5-46).

(6) Tag and disconnect coax cables from PCB (16) (figure 5-46).

(7) Remove PCB (16) from Mother Board (12) (figure 5-46).

(8) Tag and disconnect coax cables from High Frequency Phase Lock PCB enclosure (18) (figure 5-46).

(9) Remove five slotted nuts (153) and lockwashers (17) from underside of Mother Board (12), which secure PCB enclosure (18) to Mother Board (12). Remove hex nut from three coax connectors which secure PCB (19) to enclosure (18) (figure 5-46).

(10) Remove PCB enclosure (18) from Mother Board (12). Remove PCB (19) from Mother Board (12) (figure 5-46).

(11) Tag and disconnect coax cable from 79-80 MHz Loop PCB enclosure (20) (figure 5-46).

(12) Remove four slotted nuts (154) and four lockwashers (157) from underside of Mother Board (12), which secure PCB enclosure (20) to Mother Board (12) (figure 5-46). Remove hex nut from coax connector which secures PCB (21) to enclosure (20) (figure 5-46).

(13) Remove PCB enclosure (20) from Mother Board (12). Remove PCB (21) from Mother Board (12) (figure 5-46).

(14) Remove two Phillips screws (72) and two lockwashers (73) which secure 250 kHz I.F. Monitor Audio Circuit Board retainer (74) to Frame Support Member (25).

(15) Remove two 3/8" Phillips screws (27) and two lockwashers (28) which secure 250 kHz I.F. Monitor Audio Circuit Board guide mounting plate (29) to 1200 MHz Diode Switch/ High Frequency Multiplier Mixer mounting bracket (30) (figure 5-46).

(16) Remove 250 kHz I.F. Monitor Audio PCB (32) from Mother Board (12) (figure 5-46).

(17) Tag and disconnect coax cables from 1080 MHz Multiplier Amplifier Assembly (33) (figure 5-46).

(18) Tag and unsolder wire from feed-thru capacitor on assembly.

(19) Remove one 1/8" Phillips screw, one 5/32" Phillips screw, and one lockwasher which secure assembly (33) to mounting bracket (34) (figure 5-46).

(20) Remove assembly (33) from mounting bracket (34) (figure 5-46).

(21) Tag and disconnect coax cables from 1200 MHz Amplifier Assembly (36) (figure 5-46).

(22) Tag and unsolder wire from feed-thru capacitor on assembly (36) (figure 5-46).

(23) Remove four Phillips screws and four lockwashers from underside of Mother Board (12) which secure assembly (36) to Mother Board (figure 5-46).

(24) Remove assembly (36) and mounting bracket (34) from Mother Board (12) (figure 5-46).

(25) Tag and disconnect coax cables from High Level Amplifier Assembly (63) (figure 5-46).

(26) Tag and unsolder wires from feed-thru capacitors.

(27) Remove two 3/8" Phillips screws and two lockwashers from underside of Mother Board (12) which secure High Level Amplifier (63) to Mother Board (figure 5-46).

(28) Remove High Level Amplifier (63) from Mother Board (12) (figure 5-46).

(29) Remove two 1/4" Phillips screws and two lockwashers from underside of Mother Board (12) which secure static Discharge Protector (35) to Mother Board (figure 5-46).

(30) Tag and disconnect coax cables from assembly (35) (figure 5-46).

(31) Tag and unsolder wire from feed-thru capacitor.

(32) Remove assembly (35) from Mother Board (12) (figure 5-46).

(33) Tag and remove coax cables from 108 MHz Bandpass Filter Assembly (71) (figure 5-46).

(34) Remove four 7/16" Phillips screws, four lockwashers, and four spacers which secure 108 MHz Bandpass Filter (71) to underside of mounting bracket (30) (figure 5-46).

(35) Remove 108 MHz Bandpass Filter (71) (figure 5-46).

(36) Remove two 5/16" Phillips screws (68) and two lockwashers (69) which secure Relay Driver Circuit Board (70) to underside of Mother Board (12) (figure 5-46).

(37) Unplug Relay Driver Circuit Board (70) from connector and remove circuit board (figure 5-46).

g. *Removal of Assemblies from Lower Floor.*

(1) Remove two screws (155) and two washers (156) which secure frame support member (53) to Front Panel (44) and Rear Panel (58) (figure (5-46).

(2) Swing Lower Floor (52) open (figure 5-46).

(3) Tag and disconnect coax cables from FM/AM Generator (54) (figure 5-46).

(4) Unplug mating connector from bracket mounted connector (141) (figure 5-46).

(5) Remove two 1/4" Phillips screws, two lockwashers and two flatwashers from FM/AM Generator (54) (figure 5-46).

(6) Remove assembly (54) from Lower Floor (52) (figure 5-46).

(7) Remove two 1/4" Phillips screws, two lockwashers, and two flat washers which hold 100 MHz Amplifier/108 MHz Mixer Assembly (55) to Lower Floor (52) (figure 5-46).

(8) Tag and disconnect coax cables from assembly (55) (figure 5-46).

(9) Tag and unsolder wire from feed-thru capacitor.

(10) Remove assembly (55) from Lower Floor (52) (figure 5-46).

(11) Tag and disconnect coax cables from 120 MHz Receiver Assembly (56) (figure 5-46).

(12) Tag and unsolder wires from feed-thru capacitors on assembly (56) (figure 5-46).

(13) Remove two 1/4" Phillips screws, four lockwashers and two flat washers which hold assembly (56) to Lower Floor (52) (figure 5-46).

(14) Remove assembly (56) from Lower Floor (52) (figure 5-46).

h. *Removal of Assemblies from Rear Panel.*

(1) Loosen two captive screws which secure A1A8A1P1 to A1A8A1J1 (140) on Duty Cycle Regulator Assembly (59) (figure 5-46).

(2) Remove four Phillips screws which hold Duty Cycle Regulator (59) to Rear Panel (58) (figure 5-46).

(3) Remove Phillips screw and terminal lug at inside bottom of Regulator (59).

(4) Remove Duty Cycle Regulator (59) from Rear Panel (58) (figure 5-46).

(5) Unscrew semirigid coax hex nut connection from Transmitter Sensor (62) (figure 5-46).

(6) Tag and unsolder wire from feed-thru capacitor.

(7) Unscrew hex nut connection between 20 dB Pad (61) and Transmitter Sensor Assembly (62) (figure 5-46).

(8) Remove Transmitter Sensor (62) (figure 5-46).

(9) Remove four 3/8" Phillips screws which secure 20 dB Pad (61) to Rear Panel (58) (figure 5-46).

(10) Unscrew hex nut connection between Power Monitor (60) and 20 dB Pad Assembly (61) (figure 5-46).

(11) Tag and disconnect coax cables from Power Monitor Assembly (60) (figure 5-46).

(12) Remove 20 dB Pad (61) (figure 5-46).

(13) Remove Power Monitor (60) from 20 dB Pad (61) (figure 5-46).

(14) Remove two 3 3/4" Phillips screws (64) and two flat washers (65) which hold Modified Battery Assembly (66) to Rear Panel (58) (figure 5-46).

(15) Unplug 2-pin Molex connector (139) (figure 5-46).

(16) Remove Modified Battery Assembly (66) (figure 5-46).

(17) Remove four screws, two lockwashers and two ground lugs from Rear Panel (58) which secure transformer mounting bracket and transformer (67) to Rear Panel (58) (figure 5-46).

(18) Tag and unsolder wires from transformer (67) (figure 5-46).

(19) Remove transformer mounting brackets, transformer (67) and one standoff (figure 5-46).

i. *Removal of Assemblies from Front Panel.*

(1) Remove Phillips screws and lockwashers which hold frame support members to Front Panel (44) (figure 5-46).

(2) Disconnect coax connectors from rear of TRANS/RCVR, 10 MHz REF OUT, SCOPE IN, and ANT INPUT coaxial jacks.

(3) Tilt top of Front Panel forward to provide better access to rear of Front Panel (44) (figure 5-46).

(4) Use an Allen wrench to loosen the two socket head screws located in control knobs (108, 109, 112, 115, 116, 117, 118, 121 and 124) (figure 5-46).

(5) Remove knobs from control shafts.

(6) Disconnect plug from jack (145) attached to Spectrum Analyzer Assembly (125) (figure 5-46).

(7) Disconnect coax connector (144) (figure 5-46).

(8) Remove hex nuts (110, 113, 119, 132, and 134) which secure Spectrum Analyzer Assembly (125) to Front Panel (44) (figure 5-46).

(9) Remove flatwashers (111, 114, 120, 133, and 135) from control bushings (figure 5-46).

(10) Remove two hex nuts (143) from screw (126), which secure Spectrum Analyzer Assembly (125) to frame support member (129) (figure 5-46). Let screw (126) washer (127) and spacer (128) remain in Spectrum Analyzer (125).

(11) Lift Spectrum Analyzer Assembly (125) from AN/GRM-114 (figure 5-46).

(12) Disconnect fifteen-pin connector A1-A12P1 from Dual Tone Generator PCB (109) (figure 5-47).

(13) Remove four hex nuts (72) and four lockwashers (73) which secure Dual Tone Generator Assembly (74) to Front Panel (44) (figure 5-47).

(14) Remove Dual Tone Generator Assembly (74) from Front Panel (44) (figure 5-47).

(15) Remove two hex nuts and solder lugs from Frequency Error Meter (81) terminals (figure 5-47).

(16) Remove two screws which hold meter to rear of Front Panel (44) (figure 5-47).

(17) Remove meter from Front Panel.

(18) Tag and disconnect two multi-pin plugs from Frequency (MHz) Select Switch Assembly PCB (79) (figure 5-47).

(19) Remove four hex nuts (75), four lockwashers (76), and four flatwashers (77) which hold Frequency (MHz) Select Switch Assembly (78) to Front Panel (44) (figure 5-47).

(20) Remove assembly from Front Panel.

(21) Remove two hex nuts and solder lugs from Deviation (KHz)/WATTS meter (80) terminals (figure 5-47).

(22) Remove two screws which secure meter to Front Panel (44) (figure 5-47).

(23) Remove meter from Front Panel.

(24) Remove hex nut and lockwasher which secure ANT INPUT jack (82) to Front Panel (44) (figure 5-47).

(25) Remove ANT INPUT jack from Front Panel.

(26) Use an Allen wrench to loosen socket head screws (83) which secure knob (84) to shaft of DEV/PWR switch shaft (figure 5-47).

(27) Tag and unsolder wires from DEV/PWR switch wafer terminals.

(28) Remove hex nut (110) and flat washer which secure DEV/PWR switch to Front Panel (44) (figure 5-47).

(29) Remove switch and lockwasher from Front Panel.

(30) Tag and unsolder wires from HI LVL/ μV x 100/NORM switch.

(31) Remove hex nut (113) and flat washer which secure switch to Front Panel (44) (figure 5-47).

(32) Remove switch and lockwasher from Front Panel.

(33) Tag and unsolder wires from AUTO/ OFF/ZERO, BATT switch.

(34) Remove hex nut (86) and flat washer which secure switch to Front Panel (44) (figure 5-47).

(35) Remove switch and lockwasher from Front Panel.

(36) Use an Allen wrench to loosen two socket head screws (87) in RF LEVEL/ BFO INJECTION control knob (88) (figure 5-47).

(37) Remove knob (88) (figure 5-47).

(38) Remove two 1/4" Phillips screws from dial/attenuator stop (89) (figure 5-47).

(39) Remove hex nut (127) and dBm Dial (128) from shaft of Dial Attenuator Assembly (91). Then remove one 1/4" Phillips screw which holds dial index/ attenuator ring (90) to Front Panel (44) (figure 5-47).

(40) Remove dial index/attenuator ring (90) from Front Panel (44) (figure 5-47).

(41) Disconnect coax connectors from attenuator Assembly (91) (figure 5-47).

(42) Remove hex nut and lockwasher which secure TRANS/RCVR jack (92) to Front Panel (44) (figure 5-47).

(43) Remove TRANS/RCVR jack (92) from Front Panel (44) (figure 5-47).

(44) Make sure two-pin Molex battery connector (139) has been disconnected (figure 5-47).

(45) Unsolder wires from PWR/OFF/BATT switch (93) at rear of Front Panel (44) (figure 5-47).

(46) Remove two hex nuts, one washer and three solder lugs which secure switch (93) to Front Panel (44) (figure 5-47).

(47) Remove switch and spacer from Front Panel.

(48) Tag and unsolder wires from ZERO/ RCVR potentiometer at rear of Front Panel.

(49) Remove hex nut (94) and flat washer which secure ZERO/RCVR potentiometer to Front Panel (44) (figure 5-47).

(50) Remove potentiometer and lockwasher from Front Panel.

(51) Tag and unsolder wires from GEN/ RCVR switch at rear of Front Panel (44) (figure 5-47).

(52) Remove hex nut (95) and flat washer which secure GEN/RCVR switch to Front Panel (44) (figure 5-47).

(53) Remove switch and lockwasher from Front Panel.

(54) Tag and unsolder wires from RCVR WIDE/MID/NARROW switch at rear of Front Panel (44) (figure 5-47).

(55) Remove hex nut (125) and flat washer which secure switch to Front Panel (44) (figure 5-47).

(56) Remove switch and lockwasher from Front Panel (44) (figure 5-47).

(57) Remove hex nut from rear of mounting block. Remove hex nut and lockwasher which secure REF OUT jack (96) to Front Panel (44) (figure 5-47).

(58) Remove REF OUT jack (96) from Front Panel.

(59) Use an Allen wrench to loosen two socket head screws in SQUELCH control knob (97) and remove knob (97) from control shaft (figure 5-47).

(60) Tag and unsolder wires from SQUELCH control at rear of Front Panel (44) (figure 5-47).

(61) Remove hex nut and flat washer which secure control to Front Panel (44) (figure 5-47).

(62) Remove SQUELCH control and terminal lug from Front Panel.

(63) Tag and unsolder wires from EXT SPKR jack (98) at rear of Front Panel (44) (figure 5-47).

(64) Remove hex nut and flat washer which secure EXT SPKR jack (98) to Front Panel (44) (figure 5-47).

(65) Remove jack and lockwasher from Front Panel.

(66) Use an Allen wrench to loosen two socket head screws which hold VOL control knob (99) to VOL control shaft. Remove knob (99) (figure 5-47).

(67) Tag and unsolder wires from VOL control at rear of Front Panel (44) (figure 5-47).

(68) Remove hex nut and flat washer which secure VOL control to Front Panel (44) (figure 5-47).

(69) Remove VOL control and lockwasher from Front Panel.

(70) Tag and unsolder wires from INT MOD/RCVR switch (100) at rear of Front Panel (44) (figure 5-47).

(71) Remove hex nut and flat washer which secure INT MOD/RCVR switch (100) to Front Panel (44) (figure 5-47).

(72) Remove switch and lockwasher from Front Panel.

(73) Tag and unsolder wires from AM/FM switch (101) at rear of Front Panel (44) (figure 5-47).

(74) Remove hex nut and flat washer which secure AM/FM switch (101) to Front Panel (44) (figure 5-47).

(75) Remove AM/FM switch and terminal lug from Front Panel.

(76) Tag and unsolder wires from BFO switch (102) (figure 5-47).

(77) Remove hex nut and flat washer which secure BFO switch to Front Panel (44) (figure 5-47).

(78) Remove BFO switch and lockwasher from Front Panel.

(79) Tag and unsolder wires from EXT MOD jack (103) (figure 5-47).

(80) Remove hex nut and flat washer which secure EXT MOD jack (103) to Front Panel (44) (figure 5-47).

(81) Remove jack and lockwasher from Front Panel.

(82) Tag and unsolder wires from EXT ACC jack (104) at rear of Front Panel (44) (figure 5-47).

(83) Remove hex nut and lockwasher at rear of Front Panel (44) which secure jack to Front Panel (44) (figure 5-47).

(84) Remove EXT ACC jack from Front Panel.

(85) Tag and unsolder wires from INT MOD OUT jack (105) at rear of Front Panel (44) (figure 5-47).

(86) Remove hex nut and lockwasher at rear of Front Panel (44) which secure jack (105) to Front Panel (44) (figure 5-47).

(87) Remove INT MOD OUT jack from Front Panel.

(88) Use an Allen wrench to loosen socket head screws which secure INT MOD knob (106) and 1 KHz INT MOD knob (108) to control shafts (figure 5-47).

(89) Remove knobs (106 and 108) from control shafts.

(90) Tag and unsolder wires from INT MOD and 1 KHz INT MOD controls at rear of Front Panel (44) (figure 5-47).

(91) Remove hex nut and flat washer which secure INT MOD controls to Front Panel (44) (figure 5-47).

(92) Remove INT MOD controls from Front Panel.

(93) Remove hex nut and lockwasher which secure SCOPE IN jack (107) to Front Panel (44) (figure 5-47).

(94) Remove SCOPE IN jack (107) from Front Panel.

(95) Use an Allen wrench to loosen socket head screws in 1.5/5/15 KHz control knob (122) (figure 5-47).

(96) Remove knob from control shaft.

(97) Tag and unsolder wires from 1.5/5/15 KHz control at rear of Front Panel (44) (figure 5-47).

(98) Remove hex nut (112) and flat washer which secure switch to Front Panel (44) (figure 5-47).

(99) Remove 1.5/5/15 KHz control and lockwasher from Front Panel (44) (figure 5-47).

(100) Tag and unsolder wires from 10 MHz CAL control (126) (figure 5-47).

(101) Unscrew control from mounting block at rear of Front Panel (44) (figure 5-47).

(102) Pull off green lamp cover (146) from left-hand Phase Lock lamp on Front Panel (44) (figure 5-46).

(103) Use a piece of tape to remove lamp from lamp socket.

(104) Tag and unsolder wires from lamp socket at rear of Front Panel (44) (figure 5-46).

(105) Remove lamp socket from rear of Front Panel (44) (figure 5-46).

(106) Pull off green lamp cover (147) from right-hand Phase Lock lamp on Front Panel (44) (figure 5-46).

(107) Use a piece of tape to remove lamp from lamp socket.

(108) Tag and unsolder wires from lamp socket at rear of Front Panel (44) (figure 5-46).

(109) Remove lamp socket from rear of Front Panel (44) (figure 5-46).

(110) Pull off green lamp cover (148) from INPUT LEVEL lamp on Front Panel (44) (figure 5-46).

(111) Use a piece of tape to remove lamp from lamp socket.

(112) Tag and unsolder wires from lamp socket at rear of Front Panel (44) (figure 5-46).

(113) Remove lamp socket from rear of Front Panel (44) (figure 5-46).

(114) Pull off green lamp cover (149) from Power ON lamp on Front Panel (44) (figure 5-46).

(115) Use a piece of tape to remove lamp from lamp socket.

(116) Tag and unsolder wires from lamp socket at rear of Front Panel (44) (figure 5-46).

(117) Remove lamp socket from rear of Front Panel (44) (figure 5-46).

(118) Pull off amber lamp cover (150) from 0 dBm lamp on Front Panel (44) (figure 5-46).

(119) Use a piece of tape to remove lamp from lamp socket.

(120) Tag and unsolder wires from lamp socket at rear of Front Panel.

(121) Remove lamp socket from rear of Front Panel (44) (figure 5-46).

j. *MM-100 (Multimeter) Disassembly.*

(1) Loosen left-hand 1/4-turn fastener which secures metal cover plate to MM-100 accessory compartment. Remove cover plate.

(2) Remove one 1/4" Phillips screw (1) and one washer (2) which secure bracket (3) to MM-100 case (figure 5-49).

(3) Loosen 1/4-turn fastener which holds right-hand side of MM-100 Composite Assembly to MM-100 case.

(4) Separate MM-100 Composite Assembly from MM-100 Case.

(5) Remove three 1/2" screws (8) which secure Circuit Board (10) to standoffs (9) on Structural Front Panel (11) (figure 5-49).

(6) Remove two Phillips screws (47) which secure cable retaining plate (48) to bracket (3) (figure 5-49).

(7) Remove two 7/16" Phillips screws (4), two flat washers (5), and two spacers (6) which secure bracket (3) to Front Panel (7) (figure 5-49).

(8) Disconnect two connectors (46) from Circuit Board (10) (figure 5-49).

(9) Tag and unsolder four wires of Cable Assembly (49) from Circuit Board (10) (figure 5-49).

(10) Remove Cable Assembly (49) from Circuit Board (10) (figure 5-49).

5-12. Reassembly Instructions.

a. *General.* The following procedures provide a guide for assembling the AN/GRM-114, including all the assemblies herein.

b. *Precautions and General Techniques.* Reconnect all electrical wiring or cables as identified. Be careful not to damage connector pins when installing mating connectors. When necessary refer to component location diagrams located at the end of the alignment procedures to find referenced connectors, jacks, and potentiometers.

c. *Rear Panel Reassembly.*

(1) Install transformer mounting bracket, transformer (67), and two spacers (figure 5-46).

(2) Attach four screws and two ground lugs to Rear Panel (58) which hold transformer mounting bracket and transformer (67) to Rear Panel. Solder wires to transformer (figure 5-46).

(3) Install Battery Cover (6) (figure 5-46).

(4) Install Modified Battery mechanical assembly (66) (figure 5-46).

(5) Plug in battery connector (figure 5-46).

(6) Attach two 3-3/4" Phillips screws (64) and two flat washers (65) which hold Modified Battery mechanical assembly (66) to Rear Panel (58) (figure 5-46).

(7) Install 20 dB pad (61) (figure 5-46).

(8) Attach four 3/8" Phillips screws which hold 20 dB pad (61) to Rear Panel (58) (figure 5-46).

(9) Attach hex nut connection between 20 dB pad (61) and Transmitter Sensor (62) (figure 5-46).

(10) Install Duty Cycle Regulator (59) to Rear Panel (58) (figure 5-46).

(11) Attach four 3/8" Phillips screws which hold Duty Cycle Regulator (59) to Rear Panel (58). Then plug A1A8A1P1 into A1A8A1J1 (140) and tighten two captive screws. Install Phillips screw and terminal lug at inside bottom of regulator (figure 5-46).

(12) Install Transmitter Sensor (62) (figure 5-46).

(13) Solder wire to feed-through capacitor.

(14) Attach semi-rigid coax to Transmitter Sensor (62) (figure 5-46).

(15) Install Power Monitor (60) to 20 dB pad (61) (figure 5-46).

(16) Attach hex nut connection between Power Monitor (60) to 20 dB pad (61) (figure 5-46).

(17) Attach tagged coax cables to Power Monitor (60) (figure 5-46).

d. *Mother Board Reassembly.*

(1) Install 79-80 MHz Loop Circuit Board (21) to Mother Board (12) (figure 5-46).

(2) Install 79-80 MHz Loop Circuit Board enclosure (20) to Mother Board (12) (figure 5-46).

(3) Install hex nut to coax connector which holds PCB (21) to enclosure (20).

(4) Install tagged coax cable to 79-80 MHz Loop Circuit Board enclosure (20) (figure 5-46).

(5) Attach four slotted nuts (154) and four lockwashers (157) to underside of Mother Board (12), which secure 79-80 MHz Loop Circuit Board enclosure (20) to Mother Board (figure 5-46).

(6) Install High Frequency Phase Lock Circuit Board (19) to Mother Board (12) (figure 5-46).

(7) Install High Frequency Phase Lock Circuit Board enclosure (18) to Mother Board (12) (figure 5-46).

(8) Install three hex nuts and lockwashers to coax connectors which secure PCB (19) to enclosure (18) (figure 5-46).

(9) Attach five slotted nuts (153) and lockwashers (17) to underside of Mother Board (12), which secure enclosure (18) to Mother Board (figure 5-46).

(10) Install tagged coax cables to enclosure (18) (figure 5-46).

(11) Install tagged coax cables to VCO Tuner Circuit Board (16) (figure 5-46).

(12) Install VCO Tuner Circuit Board (16) to Mother Board (12) (figure 5-46).

(13) Secure VCO PCB retainer (15) to standoff (14) with one Phillips screw (13) (figure 5-46).

(14) Install Regulator and Power Supply Circuit Board (10) to Mother Board (12) (figure 5-46).

(15) Install Circuit Board retainer (8) to frame support member (129) (figure 5-46).

(16) Attach two 1/4" Phillips screws and two lockwashers which secure Regulator and Power Supply Circuit Board retainer (8) to frame support member (129) (figure 5-46).

(17) Install Static Discharge Protector (35) to Mother Board (12) (figure 5-46).

(18) Install tagged coax cables to Static Discharge Protector (35) (figure 5-46).

(19) Attach two 1/4" Phillips screws and two lockwashers to underside of Mother Board (12) which secure Static Discharge Protector (35) to Mother Board (figure 5-46).

(20) Install mounting bracket (34) to Mother Board (12) (figure 5-46).

(21) Install 1200 MHz Amplifier (36) to Mother Board (12) (figure 5-46).

(22) Attach four Phillips screws and four lockwashers to underside of Mother Board (12) which secure 1200 MHz Amplifier (36) to Mother Board. Solder wire to feed-through capacitor on assembly (figure 5-46).

(23) Attach RF cables to 1200 MHz Amplifier (36) (figure 5-46).

(24) Solder wire to 1080 MHz Multiplier Amplifier (33) feed-through capacitor (figure 5-46).

(25) Install 1080 MHz Multiplier Ampl. (33) to mounting bracket (34) (figure 5-46).

(26) Attach one 1/8" Phillips screw, and one 5/32" Phillips screw and one lockwasher which secure 1080 MHz Multiplier Amplifier (33) to mounting bracket (34) (figure 5-46).

(27) Attach tagged coax cables to 1080 MHz Multiplier Amplifier (33) (figure 5-46).

(28) Install High Level Amplifier (63) to Mother Board (12) (figure 5-46).

(29) Attach two 3/8" Phillips screws and two lockwashers to underside of Mother Board (12) which secure High Level Amplifier (63) to Mother Board (figure 5-46).

(30) Solder wires to feed-through capacitors.

(31) Install tagged coax cables to High Level Amplifier (63) (figure 5-46).

(32) Install 250 kHz I.F. Monitor Audio Circuit Board (32) (figure 5-46).

(33) Attach two 3/8" Phillips screws (27) and two lockwashers (28) which secure 250 kHz I.F. Monitor Audio Circuit Board guide mounting plate (29) through 1200 MHz Diode Switch/High Frequency Multiplier/ Mixer mounting bracket (30) to lower frame support member (136) (figure 5-46).

(34) Attach 250 kHz I.F. Monitor Audio Circuit Board retainer (74) with two Phillips screws (72) and lockwashers (73) to upper frame support member (25) (figure 5-46).

(35) Plug in Relay Driver Circuit Board (70) to connector and install Circuit Board (figure 5-46).

(36) Attach two 5/16" Phillips screws (68) and two lockwashers (69) which hold Relay Driver Circuit Board (70) to underside of Mother Board (12) (figure 5-46).

(37) Install 108 MHz Bandpass Filter (71) (figure 5-46).

(38) Attach four 7/16" Phillips screws, four lockwashers, and four spacers which hold 108 MHz Bandpass Filter (71) to underside of 1200 MHz Diode Switch/High Frequency Multiplier/Mixer mounting bracket (30) (figure 5-46).

(39) Attach tagged coax cables to 108 MHz Bandpass Filter (71) (figure 5-46).

e. *Frame Support Member Reassembly.*

(1) Install High Frequency Multiplier/Mixer (51) to mounting bracket (30) (figure 5-46).

(2) Use an Allen wrench to attach four socket head screws which hold the High Frequency Multiplier/Mixer (51) to 1200 MHz Diode Switch/High Frequency Multiplier/Mixer mounting bracket (30) (figure 5-46).

NOTE

Install Battery Fuse on back of Rear Panel.

(3) Plug mating connector into connector on assembly (51) (figure 5-46).

(4) Solder wires to assembly (51) (figure 5-46).

(5) Install tagged coax cables to assembly (51) (figure 5-46).

(6) Insert capacitor (7) through mounting clamp (5). Tighten slotted screw in mounting clamp (figure 5-46).

(7) Install 1200 MHz Diode Switch (49) to mounting bracket (30) (figure 5-46).

(8) Solder wire to feed-through capacitor.

(9) Install tagged coax cables.

(10) Attach two Phillips screws (50) which hold straps for tagged coax cables (figure 5-46).

(11) Install tagged coax cables to 1200 MHz Diode Switch (49) (figure 5-46).

(12) Use an Allen wrench to attach two 5/8" socket head screws (47) and two spacers (48) which hold 1200 MHz Diode Switch (49) to 1200 MHz Diode Switch/High Frequency Multiplier/Mixer mounting bracket (30) (figure 5-46).

(13) Install First Mixer (45) to frame support member (25) (figure 5-46).

(14) Attach three 7/16" Phillips screws (46) which secure First Mixer (45) to frame support member (25) (figure 5-46).

(15) Solder wire to feed-through capacitor.

(16) Install tagged coax cables to First Mixer (45) (figure 5-46).

(17) Install speaker assembly/plate retainer (41) to frame support member (25) (figure 5-46).

(18) Solder wires to speaker assembly.

(19) Attach one 1/4" Phillips screw (38) and one lockwasher (39), and one 1/2" Phillips screw (40) and one lockwasher (39) which secure speaker assembly/plate retainer (41) to frame support member (25) (figure 5-46).

(20) Attach 100 MHz Filter (37) to mounting angle (77) with two screws (78) and two washers (79) (figure 5-46).

(21) Solder wire to feed-through capacitor on assembly (37) (figure 5-46).

(22) Install tagged coax cables to assembly (37) (figure 5-46).

(23) Attach mounting angle (77) to 1200 MHz Diode Switch/High Frequency Multiplier/Mixer mounting bracket (30) with two screws (75) and lockwashers (76) (figure 5-46).

(24) Install tagged coax cables to Second Mixer Assembly (24) (figure 5-46).

(25) Plug in circular mating connector (26).

(26) Install Second Mixer Assembly (24) to frame support member (25) (figure 5-46).

(27) Attach two 3/8" Phillips screws (23) which secure Second Mixer Assembly (24) to frame support member (25) (figure 5-46).

f. *Front Panel Reassembly.*

(1) Attach socket head screws with Allen wrench to KHz control (122). Attach control (122) (figure 5-47).

(2) Use an Allen wrench to attach socket head screws to EXT V/DIV Control (118). Attach control (118), hex nut (119), and washer (120) (figure 5-46).

(3) Use an Allen wrench to attach socket head screws to EXT V/DIV Vernier Control (117). Attach control (117) (figure 5-46).

(4) Attach hex nut, washer and SCOPE IN connector (107) (figure 5-47).

(5) Tighten hex nut.

(6) Attach tagged coax cable to SCOPE IN connector (107) at rear of Front Panel (44) (figure 5-47).

(7) Install assembly and washer to rear of Front Panel (44) (figure 5-47).

(8) Solder tagged wires to assembly at rear of Front Panel (44) (figure 5-47).

(9) Attach hex nut and washer to Front Panel (44) (figure 5-47).

(10) Use an Allen wrench to attach two socket head screws to each of two knobs (106), (108) at INT MOD/OFF control (111) (figure 5-47).

(11) Install INT MOD OFF connector (105) (figure 5-47).

(12) Attach hex nut to rear of Front Panel (44) which holds INT MOD OUT connector (105) to Front Panel (figure 5-47).

(13) Install assembly and hex nut.

(14) Tighten hex nut at rear of Front Panel (44) (figure 5-47).

(15) Install EXT ACC connector (104) through front of Front Panel (44) (figure 5-47).

(16) Attach hex nut to rear of Front Panel (44) (figure 5-47).

(17) Solder tagged wires to assembly for EXT ACC connector (104) at rear of Front Panel (44) (figure 5-47).

(18) Attach flat washer and hex nut to Front Panel (44) at EXT MOD connector (103) (figure 5-47).

(19) Install assembly and lockwasher to rear of Front Panel.

(20) Solder tagged wires to assembly at rear of Front Panel (44) (figure 5-47).

(21) Install BFO/OFF switch assembly (102), hex nut, and washer to Front Panel (44) (figure 5-47).

(22) Attach hex nut to rear of Front Panel (44).

(23) Solder tagged wires to switch assembly at rear of Front Panel (44) (figure 5-47).

(24) Attach hex nut and flat washer.

(25) Attach hex nut to Front Panel (44) at BFO/OFF switch (102) (figure 5-47).

(26) Install AM/FM switch assembly (101), hex nut, and washer to Front Panel (44) (figure 5-47).

(27) Attach hex nut to rear of Front Panel (44) (figure 5-47).

(28) Solder tagged wires to switch assembly at rear of Front Panel (44) (figure 5-47).

(29) Attach hex nut and flat washer.

(30) Attach hex nut to Front Panel (44) at AM/FM switch (101) (figure 5-47).

(31) Install INT MOD/RCVR switch assembly (100), hex nut, and washer to Front Panel (44) (figure 5-47).

(32) Attach hex nut to rear of Front Panel (44) (figure 5-47).

(33) Solder tagged wires to switch assembly at rear of Front Panel (44) (figure 5-47).

(34) Attach hex nut and flat washer.

(35) Attach hex nut to Front Panel (44) at INT MOD/RCVR switch (100) (figure 5-47).

(36) Install VOL control assembly (99) to Front Panel (44) (figure 5-47).

(37) Solder tagged wires to assembly at rear of Front Panel (44) (figure 5-47).

(38) Attach hex nut and flat washer.

(39) Attach knob (99) (figure 5-47).

(40) Use an Allen wrench to attach two 1/8" socket head screws which hold VOL control knob (99) to Front Panel (44) (figure 5-47).

(41) Install EXT SPKR connector assembly (98) with lockwasher to rear of Front Panel (44) (figure 5-47).

(42) Solder tagged wires to assembly at rear of Front Panel (44) (figure 5-47).

(43) Attach hex nut and washer to Front Panel (44) at EXT SPKR connector (98) (figure 5-47).

(44) Install SQUELCH control assembly and lug to Front Panel (44) (figure 5-47).

(45) Solder tagged wires to rear of Front Panel (44) (figure 5-47).

(46) Attach hex nut and flat washer.

(47) Attach knob (97) (figure 5-47).

(48) Use an Allen wrench to attach two 1/8" socket head screws which hold SQUELCH knob (97) to Front Panel (44) (figure 5-47).

(49) Install REF OUT connector (96) (figure 5-47).

(50) Attach CAL mounting block and hex nut to rear of Front Panel (44) (figure 5-47).

(51) Attach tagged coax cable to rear of Front Panel (44) at REF OUT connector (96) (figure 5-47).

(52) Attach CAL control (126) to thick portion of threaded mounting block and solder tagged wires to rear of control (figure 5-47).

(53) Attach RCVR WIDE/MID/NARROW switch (125), hex nut, and washer to Front Panel (44) (figure 5-47).

(54) Solder tagged wires to rear of switch.

(55) Solder wire to ground lug on back of Front Panel (44) (figure 5-47).

(56) Attach hex nut and flat washer to RCVR WIDE/MID/NARROW switch (125) on Front Panel (44) (figure 5-47).

(57) Attach GEN/RCVR switch (95) lockwasher, hex nut, and flat washer to Front Panel (44) (figure 5-47).

(58) Solder wires to rear of switch.

(59) Solder wire to ground lug on back of Front Panel (44) (figure 5-47).

(60) Attach hex nut, flat washer and lockwasher to GEN/RCVR switch (95) on Front Panel (44) (figure 5-47).

(61) Install ZERO/RCVR control (94) to rear of Front Panel (44) (figure 5-47).

(62) Solder wires to control at rear of Front Panel (44) (figure 5-47).

(63) Attach hex nut, flat washer, and lockwasher to ZERO/RCVR adjustment (94) on Front Panel (44) (figure 5-47).

(64) Install PWR/OFF/BATT switch assembly (93) to mounting screws on rear of Front Panel (44) (figure 5-47).

(65) Attach hex nut and washer to one mounting screw; hex nut, lockwasher, three terminal lugs, washer and spacer on other screw.

(66) Solder wires to PWR/OFF/BATT switch (93) at rear of Front Panel (44) (figure 5-47).

(67) Install TRANS/RCVR connector (92) to Front Panel (44) (figure 5-47).

(68) Attach hex nut to rear of Front Panel (44) which holds TRANS/RCVR connector (92) to Front Panel (figure 5-47).

(69) Connect coax connectors to Dial Attenuator Assembly (91), then install Assembly to Front Panel (44) (figure 5-47).

(70) Install dial index/attenuator ring (90) to Front Panel (44) (figure 5-47).

(71) Attach one 1/4" Phillips screw which holds dial index/attenuator ring (90) to Front Panel (44) (figure 5-47).

(72) Secure dBm Dial (128) to shaft of Dial Attenuator Assembly (91) with hex nut (127) (figure 5-47).

(73) Secure dial/attenuator stop (89) to dBm Dial (128) with two 1/4" Phillips screws (figure 5-47).

(74) Attach knob (88) (figure 5-47).

(75) Use an Allen wrench to attach two 1/4" socket head screws (87) to BFO INJECTION knob (88) (figure 5-47).

(76) Attach AUTO/OFF/ZERO, BATT switch (86), hex nut, and washer (figure 5-47).

(77) Solder wires to rear of switch.

(78) Attach hex nut and flat washer to AUTO/OFF/ZERO, BATT switch (86) on Front Panel (44) (figure 5-47).

(79) Attach HI LVL/μV x 100/NORM switch (85), lockwasher, hex nut, and flat washer (figure 5-47).

(80) Solder tagged wires to rear of switch.

(81) Solder wire to ground lug on back of Front Panel (44) (figure 5-47).

(82) Install terminal lug to shaft of HI LVL/μV x 100/NORM switch (85). Insert shaft through rear of Front Panel (figure 5-47).

(83) Attach hex nut and flat washer to HI LVL/μV x 100/NORM switch (85) on Front Panel (44) (figure 5-47).

(84) Attach hex nut, flat washer and lockwasher to DEV/PWR control on Front Panel (44) (figure 5-47).

(85) Attach DEV/PWR knob (84) (figure 5-47). Use an Allen wrench to tighten two 1/8" socket head screws which hold DEV/PWR knob (84) to Front Panel (44).

(86) Install ANT INPUT connector (82) to Front Panel (44) (figure 5-47).

(87) Attach tagged coax cable to rear of connector.

(88) Attach hex nut to rear of Front Panel (44) which holds ANT INPUT connector (82) to Front Panel (figure 5-47).

(89) Install Frequency Select Switch (78) to Front Panel (44) (figure 5-47).

(90) Attach four hex nuts (75), four lockwashers (76), and four flat washers (77) which hold switch mechanical assembly (78) to Front Panel (44). Connect two multi-pin plugs to PCB (79) (figure 5-47).

(91) Install DEVIATION (KHz)/WATTS meter (80) to Front Panel (44) (figure 5-47).

(92) Attach two screws which hold DEVIATION (KHz)/WATTS meter (80) to rear of Front Panel (44). Install terminal lugs on rear of meter with two hex nuts (figure 5-47).

(93) Install FREQ ERROR (KHz) meter (81) to Front Panel (44) (figure 5-47).

(94) Attach two screws which hold FREQ ERROR (KHz) meter (81) to rear of Front Panel (44) (figure 5-47).

(95) Install terminal lugs on rear of meter with two hex nuts.

(96) Install Modulation Freq. Hz (Dual Tone Generator) switch assembly (74) to Front Panel (44). Install connector to bottom rear of PCB (109) (figure 5-47).

(97) Attach four hex nuts (72) and four lockwashers (73) which hold switch mechanical assembly (74) to Front Panel (44) (figure 5-47).

(98) Secure left-hand phase-lock lamp socket (146) to rear of Front Panel (44) (figure 5-46).

(99) Solder tagged wires to lamp socket.

(100) Secure lamp cover to Front Panel (44) (figure 5-46).

(101) Secure right-hand phase-lock lamp socket (147) to rear of Front Panel (44) (figure 5-46).

(102) Solder tagged wires to lamp socket.

(103) Secure lamp cover to Front Panel (44) (figure 5-46).

(104) Secure INPUT LEVEL lamp socket (148) to rear of Front Panel (44) (figure 5-46).

(105) Solder tagged wires to lamp socket.

(106) Secure lamp cover to Front Panel (44) (figure 5-46).

(107) Secure Power ON lamp socket (149) to rear of Front Panel (44) (figure 5-46).

(108) Solder tagged wires to lamp socket.

(109) Secure lamp cover to Front Panel (44) (figure 5-46).

(110) Secure 0 dBm lamp socket (150) to rear of Front Panel (44) (figure 5-46).

(111) Solder tagged wires to lamp socket.

(112) Secure lamp cover to Front Panel (44) (figure 5-46).

(113) Attach coax cables to TRANS/RCVR connector (92), 10 MHz REF OUT connector (96), ANT INPUT connector (82), and SCOPE IN connector (107) (figure 5-47).

(114) Attach one 1/2" Phillips screw (42) and one lockwasher (43) to secure frame support member (25) to Front Panel (44) (figure 5-46).

(115) Attach Phillips screws and lockwashers which hold frame support members to Front Panel (44) (figure 5-46).

g. *Spectrum Analyzer Reassembly.*

(1) Install Spectrum Analyzer Assembly (125) to top left frame support member (129) and Front Panel (44) (figure 5-46).

(2) Attach Spectrum Analyzer Assembly (125) to frame support member (129) with two hex nuts (143) and one lockwasher on one screw (126). Install connectors at (144) and (145) (figure 5-47).

(3) Attach two screws (130), two lockwashers (131) that hold top left frame support member (129) to Front Panel (44). Tighten frame support member (129) to Front Panel (44) (figure 5-46).

(4) Attach socket head screws with Allen wrench to INTENSITY control (124). Attach control (124), one hex nut (134), and one washer (135) (figure 5-46).

(5) Attach socket head screws with Allen wrench to FOCUS control (121). Attach control (121) one hex nut (132) and one washer (133) (figure 5-46).

(6) Attach socket head screws with Allen wrench to VERT control (115). Attach control (figure 5-46).

(7) Attach socket head screws with Allen wrench to ANALY DISPR/OFF control (116). Attach control (116) (figure 5-46).

(8) Install control (112) (figure 5-46).

(9) Attach socket head screws with Allen wrench to HORIZ control (112) (figure 5-46).

(10) Attach socket head screws to SWEEP control (109). Attach control (109), hex nut (110) and washer (111) (figure 5-46).

(11) Attach socket head screws with Allen wrench to SWEEP Vernier control (108). Attach control (108) (figure 5-46).

(12) Attach hex nut (113) and washer (114) (figure 5-46) to AC/DC/OFF switch on Front Panel (44) (figure 5-47).

h. *Lower Floor Reassembly.*

(1) Install 120 MHz Receiver (56) to Lower Floor (52) (figure 5-46).

(2) Attach two 1/4" Phillips screws, four lockwashers, and two flat washers which hold 120 MHz Receiver (56) to Lower Floor (52) (figure 5-46).

(3) Install tagged coax cables to 120 MHz Receiver (56). Install circular connector (142) to mating connector (figure 5-46).

(4) Install tagged coax cables to 100 MHz Amplifier/108 MHz Mixer (55) (figure 5-46).

(5) Install 100 MHz Amplifier/108 MHz Mixer (55) to Lower Floor (52) (figure 5-46).

(6) Attach two 1/4" Phillips screws, two lockwashers, and two flat washers which hold 100 MHz Amplifier/108 MHz Mixer (55) to Lower Floor (52) (figure 5-46).

(7) Install tagged coax cables to FM/AM Generator (54). Install circular connector to mating connector (141) (figure 5-46).

(8) Attach two 1/4" Phillips screws, two lockwashers and two flat washers which hold FM/AM Generator (54) to Lower Floor (52) (figure 5-46).

(9) Close Lower Floor (52) (figure 5-46).

(10) Attach two screws (155) and two washers (156) which secure frame support member (53) to Front Panel (44) and Rear Panel (58) (figure 5-46).

i. *Upper Floor Reassembly.*

(1) Attach two 1/4" Phillips screws (24), two lockwashers (25), and two flat washers (26) which secure Clock Divider mechanical assembly (22) to Upper Floor (6) (figure 5-48).

(2) Install tagged coax cables. Install mating connector to connector (23) (figure 5-48).

(3) Attach two 1/4" Phillips screws (19) and two lockwashers (20) which secure Master Oscillator Output Distribution Amplifier (21) to Upper Floor (6) (figure 5-48).

(4) Install tagged coax cables and solder wire to feed-through at Master Oscillator Output Distribution Amplifier (21) (figure 5-48).

(5) Install TCXO Master Oscillator (13) to mounting bracket (15) (figure 5-48).

(6) Attach two hex nuts (16), one lockwasher (17), and one ground lug (18) which secure Master Oscillator mounting bracket (15) to TCXO Master Oscillator (13) (figure 5-48).

(7) Attach two 5/16" Phillips screws which secure Master Oscillator mounting bracket (15) to the Upper Floor (6) (figure 5-48).

(8) Install tagged coax cable to TCXO Master Oscillator (13). Plug in tube socket (14) to TCXO Master Oscillator (13) (figure 5-48).

(9) Install 1200-2200 MHz Oscillator mechanical assembly (11) to Upper Floor (6) (figure 5-48).

(10) Attach four Phillips screws (1) and four lockwashers (36), which secure 1200-2200 MHz Oscillator mechanical assembly (11) to Upper Floor (6) (figure 5-48).

(11) Attach tagged coax cables to 1200-2200 MHz Oscillator mechanical assembly (11) (figure 5-48).

(12) Install AGC mounting bracket (9) with AGC Circuit Board (10) to 1200-2200 MHz Oscillator mechanical assembly (11) (figure 5-48).

(13) Attach two 5/16" Phillips screws (7) and two lockwashers (8) to AGC mounting bracket (9) (figure 5-48).

(14) Attach all of the tagged coax cables necessary to the AGC Circuit Board (10) (figure 5-48).

(15) Solder two tagged wires to feed-through on 1200-2200 MHz Oscillator assembly (11); one wire from AGC Circuit Board (10), the other wire from bracket mounted connector (30) (figure 5-48).

(16) Install Heterodyne Amplifier ÷2 Prescaler mechanical assembly (5) to Upper Floor (6) (figure 5-48).

(17) Attach two Phillips screws (2), two lockwashers (3), two spacers (4), which secure Heterodyne Amplifier ÷2 Prescaler mechanical assembly (5) to Upper Floor (6) (figure 5-48).

(18) Install tagged coax cables and solder wires to feed-through capacitors at Heterodyne Amplifier ÷2 Prescaler mechanical assembly (5) (figure 5-48).

(19) Attach two Phillips screws (1) and two washers (2) which secure Upper Floor Assembly (3) to frame support members (4) and (129) (figure 5-46).

j. *Case Reassembly.*

(1) Attach case to Front Panel of AN/GRM-114.

(2) Attach one Phillips screw which secures case to bottom of Front Panel.

(3) Attach one Phillips screw which secures case to top of Front Panel.

(4) Attach eight Phillips screws and eight flatwashers which secure case to Rear Panel.

(5) Attach four Phillips screws and four washers which secure black rectangular frame to four spacers on Rear Panel. Attach black rectangular frame to four spacers.

k. *MM-100 (Multimeter) Reassembly.*

(1) Attach cable assembly (49) to PCB Assembly (10) by soldering four wires to PCB Assembly (figure 5-49).

(2) Attach two connectors (46) to Circuit Board (10) (figure 5-49).

(3) Attach cable retaining plate (48) to bracket (3) with two Phillips screws (47) (figure 5-49).

(4) Attach Circuit Board (10) to standoffs (9) of Structural Front Panel (11) with three 1/2" screws (8) (figure 5-49).

(5) Attach bracket (3) to Front Panel (7) with two spacers (6), two flat washers (5), and two 7/16" Phillips screws (4) (figure 5-49).

(6) Attach bracket (3) to MM-100 case with one 1/4" Phillips screw (1) and one washer (2) (figure 5-49).

(7) Tighten 1/4-turn fastener which holds right-hand side of MM-100 Composite Assembly to MM-100 case.

(8) Attach metal cover plate to MM-100 accessory compartment by tightening 1/4-turn fastener.

(9) Slide MM-100 cover onto AN/GRM-114 cover, then secure by locking latches.

5-13. Preparation for reshipment or limited storage.

Refer to paragraph 1 of chapter 2 for packaging instructions, and to paragraph 12 of chapter 1 for Warranty Information.

5-14. Demolition to prevent enemy use.

a. *Authority for Demolition.* Demolition of the AN/GRM-114 will be accomplished only upon the order of the commander. The destruction procedure outlined in paragraph b. will be used to prevent further use of the equipment.

b. *Methods of destruction.* Any of the methods of destruction given below may be used. The time available will be a major determining factor for the method used. The tactical situation will determine in what manner the destruction order will be carried out.

(1) Smash. Smash the controls and connections of the AN/GRM-114 with the heaviest tool available if time does not permit removing the AN/GRM-114 from its case; use sledges, axes, hammers, crowbars, and any other heavy tools available to smash the interior of the AN/GRM-114.

(2) Cut. Cut cabling and wiring. Cut all cables in a number of places; use axes, machetes, and similar tools. If time permits, slash the interior wiring.

(3) Burn. Burn as much of the AN/GRM-114 as is flammable; use gasoline, oil, flamethrower, or similar tools. Burn instruction literature first. Pour gasoline on the cut cables and ignite it. Use a flame-thrower to burn the spare parts or pour gasoline on the spares and ignite it. Use incendiary grenades to complete destruction of the equipment interiors.

WARNING

Be extremely careful with explosives and incendiary devices. Use these items only when the need is urgent.

(4) Explode. Use explosives to complete demolition or to cause maximum destruction when time does not permit demolition by other means. Powder charges, fragmentation grenades, or incendiary grenades may be used. Place the explosive charges against the front panel of the AN/GRM-114 to cause maximum destruction; the second most effective location is against the top of the case of the AN/GRM-114. Incendiary grenades usually are most effective if destruction of small parts and wiring is desired.

(5) Dispose. Bury or scatter the destroyed parts in slit trenches, foxholes, or throw them into streams.

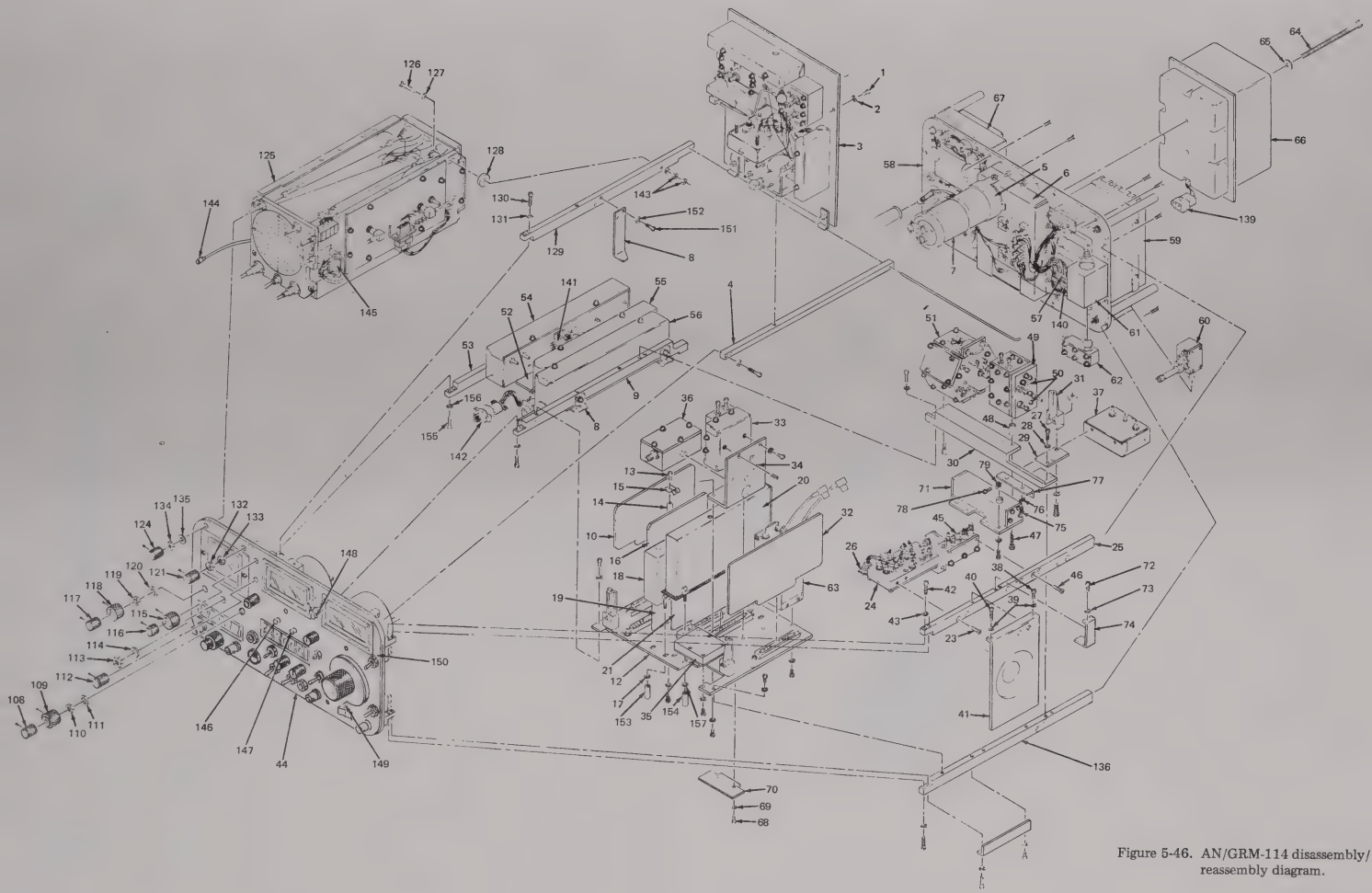

Figure 5-46. AN/GRM-114 disassembly/ reassembly diagram.

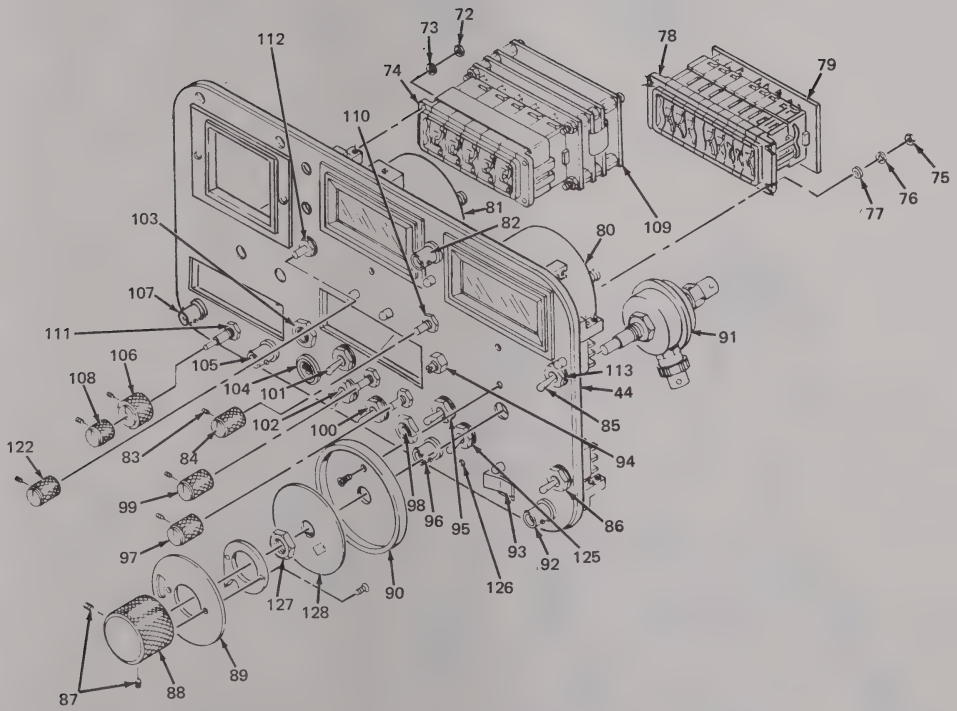

Figure 5-47. Front panel disassembly/reassembly diagram.

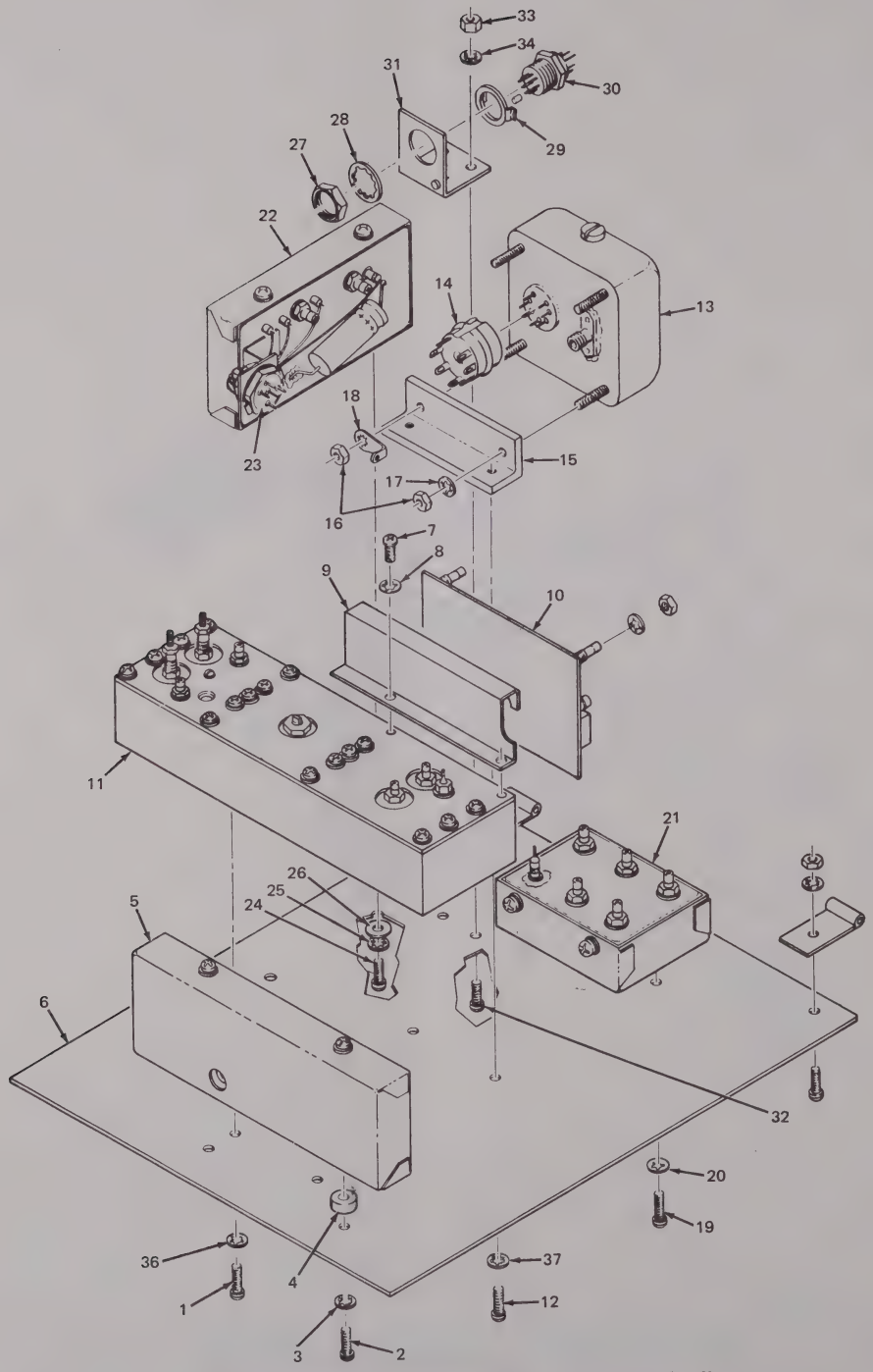

Figure 5-48. Upper floor disassembly/reassembly diagram.

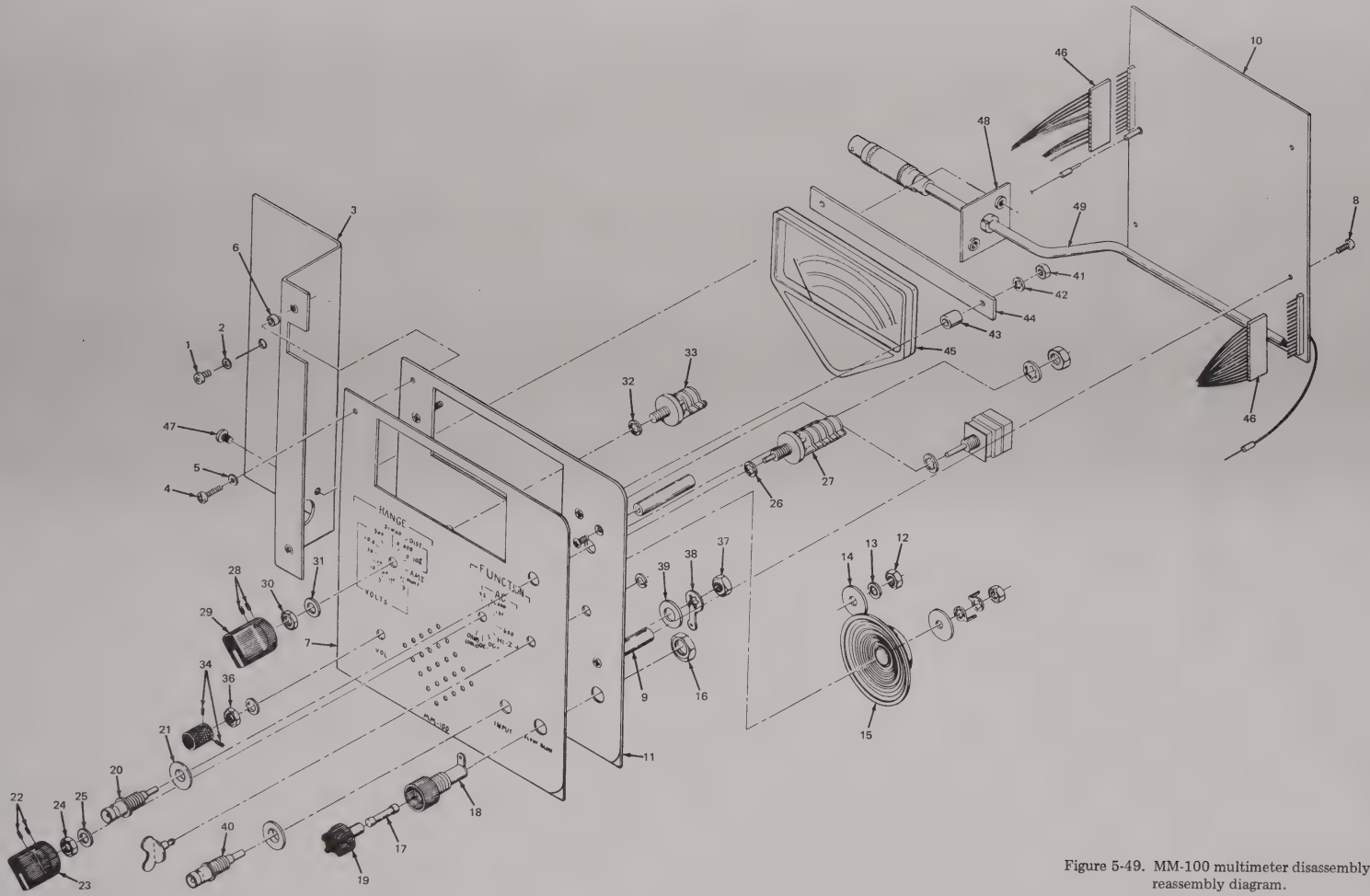

Figure 5-49. MM-100 multimeter disassembly/reassembly diagram.

CHAPTER 6

SCHEMATIC DIAGRAMS

This chapter contains the schematic diagrams for Test Set AN/GRM-114. They are located in back of the manual.

APPENDIX A

REFERENCES

DA Pam 310-4	Index of Technical Publications.
TB 43-180	Calibration Requirements for the Maintenance of Army Materiel.
TB 385-4	Safety Precautions for Maintenance of Electrical/Electronic Equipment.
TM 11-6625-400-12	Operator's and Organizational Maintenance Manual for Meter, Modulation ME-57/U.
TM 11-6625-446-15	Operator's, Organizational, Direct Support, General Support and Depot Maintenance Manual: Wattmeter AN/URM-120.
TM 11-6625-1576-15	Organizational, Direct Support, General Support and Depot Maintenance Manual for Distortion Analyzer, Hewlett-Packard Models 333A and 334A.
TM 11-6625-2736-14	Operator's, Organizational, Direct Support and General Support Maintenance Manual: Oscilloscope OS-262(P)/U (NSN 6625-01-007-9416).
TM 11-6625-2953-14	Operator's, Organizational, Direct Support and General Support Maintenance Manual: Multimeter AN/USM-451 (NSN 6625-01-060-6804).
TM 38-750	The Army Maintenance Management System (TAMMS).
TM 740-90-1	Administrative Storage of Equipment.
TM 750-244-2	Procedures for Destruction of Electronics Materiel to Prevent Enemy Use (Electronics Command).

APPENDIX B

COMPONENTS OF END ITEM LIST

Section I. INTRODUCTION

B-1. SCOPE

The integral components of and basic issue items for the AN/GRM-114 are listed in table 1-4 to help you inventory items required for safe and efficient operation.

APPENDIX D
MAINTENANCE ALLOCATION CHART

SECTION I. INTRODUCTION

1. General. This maintenance allocation chart provides a summary of the maintenance operations for Test Set AN/GRM-114. It authorizes categories of maintenance for specific maintenance functions on repairable items and components and the tools and equipment required to perform each function. This MAC appendix may be used as an aid in planning maintenance operations.

2. Maintenance Functions. Maintenance functions will be limited to and defined as follows:

a. Inspect. To determine the serviceability of an item by comparing its physical, mechanical, and electrical characteristics with established standards through examination.

b. Test. To verify serviceability and to detect incipient failure by measuring the mechanical or electrical characteristics of an item and comparing these characteristics with prescribed standards.

c. Service. Operations required periodically to keep an item in proper operating condition such as to clean, to preserve, to paint and to lubricate.

d. Adjust. Maintain within prescribed limits by bringing into proper or exact position, or by setting the operation characteristics to the specified parameters.

e. Align. Maintain within prescribed limits by bringing into proper or exact position, or by setting the operating characteristics to the specified parameters.

f. Calibrate. To determine the corrections to be made in the readings of instruments or test equipment used in precise measurement. Consists of the comparison of two instruments one which is a certified standard of known accuracy, to detect and adjust any discrepancy in the accuracy of the instrument being compared with the certified standard.

g. Install. To set up for use in an operational environment such as an encampment, site or vehicle.

h. Replace. To replace unserviceable items with serviceable like items.

i. Repair. To restore an item to serviceable condition through correction of a specific failure or unserviceable condition. This function includes, but is not limited to welding, grinding, riveting, straightening, and replacement of parts other than the trial and error replacement of running spare type items such as fuses and indicators.

j. Overhaul. Normally, the highest degree of maintenance performed by the Army in order to minimize time and assure that work in process is consistent with quality and economy of operation. It consists of that maintenance necessary to restore an item to completely serviceable condition as prescribed by maintenance standards in technical publications for each item to like new, zero mileage, or zero hour condition.

k. Rebuild. The highest degree of material maintenance. It consists of restoring equipment as nearly as possible to likenew condition in accordance with original manufacturing standards. Rebuild is the highest degree of material maintenance applied to Army equipment. Rebuild reduces to zero the hours the equipment, or component thereof, has been in use.

3. Explanation of Format of Section II, Maintenance Allocation Chart. The add columns in Section II are as follows:

a. Column 1, Group Number. Column 1 lists group numbers, the purpose of which is to identify components, assemblies, subassemblies, and modules with the next higher assembly.

b. Column 2, Component/Assembly. Colume 2 lists the noun names of components, as-

semblies, subassemblies, and modules on which maintenance is authorized.

c. Column 3, Maintenance Functions. Column 3 lists the functions to be performed on the item listed in column 2.

d. Column 4, Maintenance Category. Column 4 specifies, by the listing of a "worktime" figure in the appropriate subcolumn(s), the lowest level of maintenance authorized to perform the function listed in column 3. This figure represents the active time required to perform that maintenance function at the indicated category of maintenance. If the number of complexity of the tasks within the listed maintenance function vary at different maintenance categories, appropriate "worktime" figures will be shown for each category. The number of man-hours specified by the "worktime" figure represents the average time required to restore an item (assembly, subassembly, component, module, end item or system) to a serviceable condition under typical field operating conditions. This time includes preparation time, troubleshooting time and quality assurance/quality control time in addition to the time required to perform the specific tasks identified for the maintenance functions authorized in the maintenance allocation chart. Subcolumns of column 4 are as follows:

C Operator/crew	O Organizational
F Direct Support	H General Support Maintenance
D Depot	

e. Column 5, Tools and Equipment. Column 5 specifies, by code, those tool sets and test equipment required to perform the designated function. The numbers appearing in this column refer to specific tools and test equipment which are identified in Section III.

4. Explanation of Format of Section III, Tool and Test Equipment Requirements. The columns in Section III are as follows:

a. Tools or Test Equipment Reference Code. The numbers in this column coincide with the numbers used in the Tools and Equipment column of the applicable tool or test equipment for the maintenance functions.

b. Maintenance Category. The codes in this column indicate the maintenance category normally allocated the tool or test equipment.

c. Nomenclature. This column lists tools, test, and maintenance functions.

d. National/NATO Stock Number. This column lists the National/NATO stock number of the specific tool or test equipment.

e. Tool Number. This column lists the manufacturer's part number of the tool followed by the Federal Support Code for Manufacturers (5 digit) in parentheses.

SECTION II MAINTENANCE ALLOCATION CHART FOR TEST SET, RADIO AN/GRM-114

(1) GROUP NUMBER	(2) COMPONENT/ASSEMBLY	(3) MAINTENANCE FUNCTION	(4) MAINTENANCE CATEGORY C	O	F	H	D	(5) TOOLS AND EQPT.	(6) REMARKS
00	TEST SET, RADIO AN/GRM-114 (P/N 7002-2364-302)	Inspect		0.2				Visual	
		Install		0.2				24	
		Replace		0.2				24	
		Test				4.0		1 thru 27	
		Test					4.0	1 thru 43	
		Adjust				1.5		1 thru 27	
		Adjust					1.5	1 thru 43	
		Repair					3.0	24	A thru L
01	MECH ASSY, COMPOSITE A1 (P/N 7003-2364-101)	Test				1.5		1 thru 27	
		Repair					1.0	24	A thru M
0101	MECH ASSY, FRONT PANEL A1A1 (P/N 7005-2377-700)	Inspect				0.1		Visual	
		Replace				1.2		24	M
010101	WIRE HARNESS ASSY, FRONT PANEL A1A1A1 (P/N 7007-2377-800)	Inspect				0.1		Visual	
		Replace					0.5	24	M
0102	MECH ASSY, UPPER FLOOR A1A3 (P/N 7006-2364-400)	Inspect				0.1		Visual	
		Replace				0.5		24	A
010201	MECH ASSY, TCXO OSCILLATOR A1A3U1 (P/N 5850-000-010)	Inspect				0.1		Visual	
		Test				0.3		2,4	
		Replace				0.2		24	
010202	MECH ASSY, HET AMP 2 PRESCALER A1A3A1 (P/N 7024-2322-500)	Inspect				0.1		Visual	
		Test				0.7		3,4,14,24	
							1.5	1,3,4,8,24, 32	
		Replace				0.2		24	C
01020201	PCB ASSY, HET AMP 2 PRESCALER A1A3A1A1 (P/N 7010-2368-400)	Test					1.5	1,3,4,8,24, 32	
							0.3	24	C,M
010203	MECH ASSY, 1200-2200 MHZ OSCILLATOR A1A3A2 (P/N 7025-2356-000)	Inspect				0.2		Visual	
		Test				2.5		1,3,4,8,24	
		Test					3.0	1,3,4,8,24, 28	
		Replace				0.2		24	C
01020301	PCB ASSY, 1200-2200 MHZ OSCILLATOR A1A3A2A1 (P/N 7010-2355-900)	Test					2.5	1,3,4,8,24, 28	
		Repair					0.5	24	C,E,M
010204	PCB ASSY, AGC SYSTEM A1A3A3 (P/N 7010-2368-600)	Inspect				0.1		Visual	
		Test				0.7		1,8,17,24,36	
		Test					1.0	1,8,17,24,36	
		Replace				0.2		24	
010205	MECH ASSY, CLOCK DIVIDER A1A3A4 (P/N 7026-2321-700)	Inspect				0.1		Visual	
		Test				0.5		1,2,4,24	
		Test					1.0	1,2,4,8,24	
		Replace				0.2		24	
01020501	PCB ASSY, CLOCK DIVIDER A1A3A4A1 (P/N 7010-2309-300)	Test					1.0	1,2,4,8,24	
		Repair					0.5	24	M
010206	MECH ASSY, TCXO OUTPUT DISTRIBUTION AMPLIFIER A1A3A5 (P/N 7014-2362-000)	Inspect				0.1		Visual	
		Test				0.4		1,24	
		Test					0.8	1,4,7,8,24, 41	
		Replace				0.2		24	
01020601	PCB ASSY, TCXO OUTPUT DISTRIBUTION AMPLIEIR A1A3A5A1 (P/N 7010-2361-000)	Test					0.8	1,4,7,8,24, 24	
		Replace					0.5	24	M
0103	MECH ASSY, TRANSMITTER SENSOR A1A4 (P/N 7005-2375-000)	Inspect				0.1		Visual	
		Test				2.0		2,3,4,7,8, 20,24	
		Replace				2.2		3,4,7,8,20, 24,25,31,34, 37	
		Replace				0.2		24	

SECTION II MAINTENANCE ALLOCATION CHART
FOR
TEST SET, RADIO AN/GRM-114

(1) GROUP NUMBER	(2) COMPONENT/ASSEMBLY	(3) MAINTENANCE FUNCTION	(4) MAINTENANCE CATEGORY C	O	F	H	D	(5) TOOLS AND EQPT.	(6) REMARKS
0104	MECH ASSY, 108 MHZ BANDPASS FILTER A1A5 (P/N 7018-2340-200)	Inspect				0.1		Visual	
		Test				0.5		3,14,24	
		Test					0.5	3,4,14,24	
		Replace				0.2		24	E
0105	MECH ASSY, 1200 MHZ AMPLIFIER A1A6 (P/N 7014-2355-400)	Inspect				0.2		Visual	
		Test				0.5		3,9,14,24	
		Replace				0.5		24	G,H
010501	PCB ASSY, 1200 MHZ AMPLIFIER A1A6A1 (P/N 7010-2354-900)	Test					1.0	3,4,9,14,24,32	
		Replace					0.7	24	G,H,M
0106	MECH ASSY, STATIC DISCHARGE PROTECTIVE A1A7 (P/N 7022-2360-200)	Inspect				0.2		Visual	
		Test				0.4		3,7,8,14,24	
		Test					0.6	3,4,7,8,14,24	
		Replace				0.3		24	H
0107	MECH ASSY, REAR PANEL A1A8 (P/N 7005-2338-001)	Inspect				0.1		Visual	
		Test				0.5		4,9,24	
		Replace				0.5		24	M
010701	MECH ASSY, DUTY CYCLE REGULATOR A1A8A1 (P/N 7023-2338-400)	Inspect				0.2		Visual	
		Test				1.0		4,9,13,24	
		Test					2.0	4,9,13,24,28	
		Replace				0.2		24	I
		Repair					3.0		
01070101	PCB ASSY, TORIOD MOUNTING A1A8A1A1 (P/N 7010-2334-900)	Test					2.0	1,4,9,13,24,28	
		Replace					0.5	24	I
0107010101	PCB ASSY, DUTY CYCLE REGULATOR A1A8A1A1A1 (P/N 7010-2309-000)	Test					2.0	1,4,9,13,24,28	
		Repair					0.5	24	I,M
0108	PCB ASSY, HIGH FREQUENCY PHASELOCK A1A9 (P/N 7010-2349-300)	Inspect				0.2		Visual	
		Test				1.5		1,3,4,21,24	
		Test					3.0	1,3,4,21,24,28,39	
		Replace				0.2		24	C,J
0109	PCB ASSY, 79-80 MHZ LOOP A1A10 (P/N 7010-2342-400)	Inspect				0.1		Visual	
		Test				0.8		1,2,4,14,16,24	
		Test					1.5	1,2,4,14,16,24,28,39	
		Replace				0.2		24	
01010	PCB ASSY, VCO TUNER A1A11 (P/N 7010-2342-300)	Inspect				0.2		Visual	
		Test				0.8		1,3,4,14,17,24	
		Test					1.5	1,3,4,14,17,24,28	
		Replace				0.1		24	B
01011	MECH ASSY, DUAL TONE GENERATOR A1A12 (P/N 7005-2375-300)	Inspect				0.2		Visual	
		Test				0.7		1,2,4,5,16,18,24	
		Test					1.5	1,2,4,5,8,16,18,24	
		Replace				0.2		24	
0101101	PCB ASSY, NO. 1 DUAL TONE GENERATOR A1A12A1 (P/N 7010-2374-600)	Test					1.5	1,2,4,5,8,16,18,24	
		Repair					0.7	24	M
0101102	PCB ASSY, NO. 2 DUAL TONE GENERATOR A1A12A2 (P/N 7010-2374-900)	Test					1.5	1,2,4,5,8,16,18,24	
		Repair					0.5	24	M

SECTION II MAINTENANCE ALLOCATION CHART FOR TEST SET, RADIO AN/GRM-114

(1) GROUP NUMBER	(2) COMPONENT/ASSEMBLY	(3) MAINTENANCE FUNCTION	(4) MAINTENANCE CATEGORY C	O	F	H	D	(5) TOOLS AND EQPT.	(6) REMARKS
0101103	PCB ASSY, NO. 3 DUAL GENERATOR A1A12A3 (P/N 7010-2375-200)	Test					1.5	1,2,4,5,8, 16,18,24	
		Repair					0.5	24	M
01012	PCB ASSY, 250 KHZ I.F. MONITOR AUDIO A1A13 (P/N 7010-2357-300)	Inspect				0.2		Visual	
		Test				1.5		1,4,7,11,24	
		Test					2.5	1,4,7,11,24, 28,40	
		Replace				0.2		24	
01013	PCB ASSY, REGULATOR AND POWER SUPPLY A1A14 (P/N 7010-2367-201)	Inspect				0.2		Visual	
		Test				0.7		4,9,10,12,24	
		Test					1.0	4,9,10,12, 24,28,29	
		Replace				0.2		24	
01014	MECH ASSY, 1080 MHZ MULTIPLIER AMPLIFIER A1A15 (P/N 7048-2351-600)	Inspect				0.3		Visual	
		Test				0.5		3,14,24	
		Test					0.8	3,4,7,14,24, 29	
		Replace				0.5		24	
0101401	PCB ASSY, 1080 MHZ MULTIPLIER AMPLIFIER A1A15A1 (P/N 7010-2351-300)	Test					0.8	3,4,7,14,24, 29	
		Repair					0.3	24	M
01015	MECH ASSY, 1200 MHZ DIODE SWITCH A1A16 (P/N 7013-2329-700)	Inspect					0.2	Visual	
		Test					0.7	3,4,24	
		Test					0.8	3,4,8,24,32	
		Replace				0.4		24	G,H
01016	MECH ASSY, POWER MONITOR A1A17 (P/N 7005-2373-700)	Inspect				0.2		Visual	
		Test				0.7		3,4,7,8,14, 15,16,24	I
		Test					0.9	3,4,7,8,14, 15,16,24,31, 34,35	
		Replace				0.3		24	M
01017	MECH ASSY, SPECTRUM ANALYZER A1A18 (P/N 7029-2362-600)	Inspect				0.3		Visual	
		Test				1.0		4,6,7,16,24	
		Test					4.0	1,4,6,7,16, 24,28,30	
		Repair					0.7	24	
0101701	MECH ASSY, SPECTRUM ANALYZER, MODULE NO. 1 A1A1A1 (P/N 7030-2363-200)	Test					4.0	4,6,7,16,24, 28	
		Replace					0.3	24	
010170101	PCB ASSY, NO. 1 SPECTRUM ANALYZER A1A18A1A1 (P/N 7010-2359-300)	Test					4.0	1,4,6,7,16, 24,28	
		Repair					0.2	24	M
0101702	PCB ASSY, SCOPE INVERTER A1A18A2 (P/N 7010-2362-400)	Test					0.5	4,24,30	
		Replace					0.6	24	
0101703	MECH ASSY, SPECTRUM ANALYZER MODULE NO. 2 A1A18A3 (P/N 7030-2363-300)	Test					4.0	1,4,6,7,16, 24,28	
		Replace					0.3	24	
010170301	PCB ASSY, NO. 2 SPECTRUM ANALYZER A1A18A3A1 (P/N 7010-2359-400)	Test					4.0	1,4,6,7,16, 24,28	
		Repair					0.2	24	M
0101704	PCB ASSY, SCOPE MAIN A1A18A4 (P/N 7010-2362-500)	Test					4.0	1,4,6,7,16, 24,28	
		Replace					0.2	24	
0101705	MECH ASSY, SPECTRUM ANALYZER FRONT PLATE A1A18A5 (P/N 7028-2366-900)	Inspect					0.1	Visual	
		Replace					1.0	24	
010170501	MECH ASSY, HORIZONTAL SWEEP SWITCH A1A18A5A1 (P/N 7013-2366-700)	Test					0.2	4,24	
		Repair					0.5	24	M

SECTION II MAINTENANCE ALLOCATION CHART FOR TEST SET, RADIO AN/GRM-114

(1) GROUP NUMBER	(2) COMPONENT/ASSEMBLY	(3) MAINTENANCE FUNCTION	(4) MAINTENANCE CATEGORY					(5) TOOLS AND EQPT.	(6) REMARKS
			C	O	F	H	D		
010170502	MECH ASSY, VERTICAL GAIN SWITCH A1A18A5A2 (P/N 7013-2366-800)	Test					0.2	4,24	
		Replace					0.5	24	
010170503	WIRE HARNESS ASSY, SPECTRUM ANALYZER A1A18A5A3 (P/N 7007-2364-600)	Test					0.4	4,24	
		Repair					0.4	24	M
01018	MECH ASSY, FIRST MIXER A1A19 (P/N 7005-2373-300)	Inspect				0.1		Visual	
		Test				0.5		3,4,7,14,15, 16,19,20,24	
		Test					0.7	3,4,7,14,15, 16,19,20,24, 28	
		Replace				0.3		24	G,H
		Repair				1.0		24	
01019	MECH ASSY, SECOND MIXER A1A20 (P/N 7017-2346-200)	Inspect				0.2		Visual	
		Test				0.7		3,14,19,24	
		Test					1.0	3,4,14,19, 24,28	
		Replace				0.3		24	G,H
01020	MECH ASSY, 100 MHZ FILTER A1A21 (P/N 7018-2359-100)	Inspect				0.1		Visual	
		Test				0.3		3,14,24	
		Test					0.3	3,4,7,8,14, 24	
		Replace				0.2		24	E
0102001	PCB ASSY, 100 MHZ FILTER A1A21A1 (P/N 7010-2330-300)	Test					0.3	3,4,7,8,14, 24	
		Repair					0.4	24	E,M
01021	COAX CABLE ASSY A1A22 (P/N 6042-2645-5XX)	Inspect				0.5		Visual	
		Test				0.3		4,24	
		Repair				0.3		24	M
01022	MECH ASSY, BATTERY MODIFIED A1A23 (P/N 7005-7624-500)	Inspect				0.1		Visual	
		Test				0.2		4	
		Replace				0.2		24	
01023	MECH ASSY, LOWER FLOOR A1A24 (P/N 7005-2349-201)	Inspect				0.1		Visual	
		Replace				0.5		24	D
		Repair				1.0		24	
0102301	MECH ASSY, 100 MHZ AMPLIFIER/108 MHZ MIXER A1A24A1 (P/N 7017-2321-900)	Inspect				0.2		Visual	
		Test				0.5		3,14,24	
		Test					1.0	3,7,8,14,24, 32,42	
		Repair				0.3		24	F,K,L,M
010230101	PCB ASSY, 100 MHZ AMPLIFIER/108 MIXER A1A24A1A1 (P/N 7010-2309-500)	Test					1.0	3,4,7,8,14, 24,32,42	
		Repair					0.5	24	F,K,L,M
0102302	MECH ASSY, 120 MHZ RECEIVER A1A24A2 (P/N 7027-2348-300)	Inspect				0.2		Visual	
		Test				1.0		2,3,4,7,14, 16,24	
		Test					1.5	1,3,4,7,14, 16,24,28,42	
		Repair				0.3		24	H,M
010230201	PCB ASSY, 120 MHZ RECEIVER A1A24A2A1 (P/N 7010-2348-200)	Test					1.5	1,3,4,7,14, 16,24,28,42	
		Repair					0.5	24	H,M
0102303	MECH ASSY, FM/AM GENERATOR A1A24A3 (P/N 7005-2376-200)	Inspect				0.2		Visual	
		Test				0.7		3,4,7,14,16, 24	
		Test					1.0	1,3,6,7,8, 14,16,24,42	
		Replace				0.3		24	
010230301	PCB ASSY, FM/AM GENERATOR A1A24A3A1 (P/N 7010-2376-100)	Test					1.0	1,3,4,6,7,8, 14,16,24,42	
		Repair					0.5	24	M

SECTION II MAINTENANCE ALLOCATION CHART FOR TEST SET, RADIO AN/GRM-114

(1) GROUP NUMBER	(2) COMPONENT/ASSEMBLY	(3) MAINTENANCE FUNCTION	(4) MAINTENANCE CATEGORY C	O	F	H	D	(5) TOOLS AND EQPT.	(6) REMARKS
01024	PCB ASSY, RELAY DRIVER A1A25 (P/N 7010-2373-100)	Inspect				0.1		Visual	
		Test				0.2		4,24	
		Test					0.4	4,24	
		Replace				0.1		24	
01025	MECH ASSY, HIGH FREQUENCY MULTI/MIXER A1A26 (P/N 7015-2309-700)	Inspect				0.3		Visual	
		Test				0.8		3,8,14,21, 23,24	
		Test					1.2	3,4,8,14,21, 22,23,24,28, 29	
		Replace				0.4		24	C,J
0102501	PCB ASSY, HIGH FREQUENCY MULTI/MIXER A1A26A1 (P/N 7010-2310-100)	Test					1.2	3,4,8,14,21, 22,23,23,28, 29	
		Repair					0.5	24	C,J,M
01026	MECH ASSY, FREQUENCY SELECT SWITCH A1A27 (P/N 7013-2343-300)	Inspect				0.4		Visual	
		Replace				0.8		24	
01027	MECH ASSY, HIGH LEVEL AMPLIFIER A1A28 (P/N 7005-2372-500)	Inspect				0.2		Visual	
		Test				1.0		3,4,6,8,14, 19,24	
		Test					1.5	3,4,6,8,14, 19,24,33,35	
		Replace				0.5		24	
0102701	PCB ASSY, NO. 2 HIGH LEVEL AMPLIFIER A1A28A1 (P/N 7010-2372-400)	Test					1.5	3,4,6,8,14, 19,24,33,35	
		Repair					0.7	24	M
0102702	PCB ASSY, NO. 2 HIGH LEVEL AMPLIFIER A1A28A2 (P/N 7010-2372-100)	Test					1.5	3,4,6,8,14, 19,24,33,35	
		Repair					0.7	24	M
02	CASE ASSEMBLY MM-100 A2 (P/N 7019-2372-100)	Inspect				0.2		Visual	
		Install				0.1		24	
		Replace				0.1		24	
		Test				1.5		1,3,4,5,6,8, 16,24	
		Adjust				1.5		1,2,4,5,6,8, 16,24	
		Replace				0.2		24	
		Repair					0.5	24	
0201	COMPOSITE ASSY MM-100 A2A1 (P/N 7003-2380-000)	Test				1.5		1,2,4,5,6,8, 16,24	
		Replace				0.2		24	
		Repair					0.5	24	
020101	PCB ASSY MM-100 A2A1A1 (P/N 7010-2380-300)	Test					1.5	1,2,4,5,6,8, 16,24,43	
		Replace					0.5	24	
02010101	CABLE ASSY, INTERCONNECT MM-100 A2A1A1A1 (P/N 6046-2379-900)	Inspect				0.2		Visual	
		Test				0.5		4,24	
		Repair				0.5		24	M
020102	MECH ASSY, FRONT PANEL MM-100 A2A1A2 (P/N 7005-2380-400)	Inspect				0.1		Visual	
		Replace				1.0		24	

SECTION III TOOL AND TEST EQUIPMENT REQUIREMENTS
FOR
TEST SET, RADIO AN/GRM-114

TOOL OR TEST EQUIPMENT REF CODE	MAINTENANCE CATEGORY	NOMENCLATURE	NATIONAL/NATO STOCK NUMBER	TOOL NUMBER
1	H,D	OSCILLOSCOPE OS-262(P)/U	6625-01-007-9416	
2	H,D	FREQUENCY COUNTER TD-1225A	6625-01-103-2958	
3	H,D	SPECTRUM ANALYZER IP-1216/U PLUG-IN RF TUNER PL-1400/U PLUG-IN IF PL-1388/U	6625-00-424-4370 6625-00-422-4314 6625-00-431-9339	
4	H,D	DIGITAL MULTIMETER AN/USM-451	6625-01-060-6804	
5	H,D	DISTORTION ANALYZER AN/URM-184A	6625-00-802-8718	
6	H,D	FUNCTION GENERATOR SG-1133/U	6625-01-028-4989	
7	H,D	SIGNAL GENERATOR, RF AN/USM-308(V)1/U	6625-00-442-3470	
8	H,D	TRIPLE OUTPUT POWER SUPPLY, LAMBDA LPT-7202FM (80103)		
9	H,D	POWER SUPPLY, LAMBDA LK351FM (80103)		
10	H,D	WATTMETER AN/URM-120	6625-00-813-8430	
11	H,D	MODULATION METER ME-57/U	6625-00-647-3737	
12	H,D	MODULATED POWER SOURCE-SAGE 243C		
13	H,D	COMP ASSY, BATTERY LOAD BOX IFR 1003-9801-600 (51190)		
14	H,D	TEST LEAD BNC TO SMB (2) IFR 6050-0032-400 (51190)		
15	H,D	TEST LEAD BNC TO SMA (2) IFR 6050-0092-400 (51190)		
16	H,D	TEST LEAD BNC TO BNC (2) IFR 6050-0522-400 (51190)		
17	H,C	CONNECTOR, SMB TEE IFR 2200-0250-100 (51190)		
18	H,D	CONNECTOR, BNC TEE IFR 2105-1410-900 (51190)		
19	H,D	ADAPTER, SMB JACK TO JACK IFR 2123-0000-016 (51190)		
20	H,D	ADAPTER, SMA JACK TO JACK IFR 2200-0110-100 (51190)		
21	H,D	HIGH FREQUENCY MULTIPLIER/MIXER SNIFFER IFR 6500-9801-700 (51190)		
22	H,D	EXTENDER CABLE (9 PIN) IFR 6046-9801-800 (51190)		
23	H,D	TEST LEAD SMB TO SMB (2) IFR 6050-0042-220 (51190)		
24	O,H,D	TOOL KIT, ELECTRONIC EQUIPMENT TK-100/G	5180-00-605-0079	
25	H,D	CONNECTOR, BNC TO N (2) IFR		
26	H,D	MODIFIED 1/4 INCH NUT DRIVER IFR		
27	H,D	XONNECTOR, SMA TEE IFR		
28	D	TEST SET, RADIO AN/GRM-114		
29	D	VARIABLE ATTENUATOR, TEXSCAN RA-50 (230-42)		
30	D	HIGHT VOLTAGE PROBE, CALIF. INSTRUMENT HV-30 (12897)		
31	D	VSWR BRIDGE, WILTRON 60-N50 (87807)		
32	D	SWEEP SIGNAL GENERATOR, WAVETEK 2002 (Z3338)		
33	D	TRACKING GENERATOR SG-1125/U	6625-00-185-4802	
34	D	50Ω TERMINATION IFR 2650-0010-200 (51190)		
35	D	R.F. POWER METER WITH POWER DETECTOR HEAD 42BD (04901) 41-41A (04901)		
36	D	COMP ASSY, AGC MONITOR METER IFR 7003-9801-500 (51190)		
37	D	Resistor, 390KΩ, 1/4 W IFR 4702-0394-003 (51190)		
38	D	PCB ASSY EXTENDER, 79-80 MHZ LOOP IFR 7010-9801-200 (51190)		

SECTION III TOOL AND TEST EQUIPMENT REQUIREMENTS
FOR
TEST SET, RADIO AN/GRM-114

TOOL OR TEST EQUIPMENT REF CODE	MAINTENANCE CATEGORY	NOMENCLATURE	NATIONAL/NATO STOCK NUMBER	TOOL NUMBER
39	D	PCB ASSY EXTENDER, REG AND PWR SUPPLY IFR 7010-9801-300 (51190)		
40	D	PCB ASSY EXTENDER, 250 KHZ I.F. MONITOR IFR 7010-9801-400 (51190)		
41	D	RESISTOR, 470Ω, 1/4 W IFR 4702-0471-003 (51190)		
42	D	COAX CABLE WITH SNIFFER LOOP IFR 6050-0534-800 (51190)		
43	D	RESISTOR, 300Ω, 1/4W IFR 4706-3011-001 (51190)		
		NOTE TEST EQUIPMENT WITH EQUIVALENT SPECIFICATIONS CAN BE SUBSTITUTED FOR ABOVE LISTED ITEMS.		

SECTION IV

REMARKS FOR
AN/GRM-114 MAINTENANCE ALLOCATION CHART

REFERENCE CODE	REMARKS
A	Replacement of upper floor assembly requires calibration of unit.
B	Replacement of VCO Tuner requires alignment.
C	Replacement or repair of module requires VCO Tuner alignment.
D	Replacement of lower floor assembly requires calibration of unit.
E	Replacement or repair of module requires alignment of High Frequency Multiplier Mixer assembly.
F	Replacement or repair of module requires alignment of 1080 MHz Multiplier Amplifier assembly.
G	Replacement or repair of module requires alignment of FM/AM Generator assembly.
H	Replacement or repair of module requires alignment of 250 kHz I.F. Monitor assembly.
I	Replacement or repair of module requires alignment of Regulator and Power Supply assembly.
J	Replacement or repair of module requires alignment of 1200-2200 MHz Oscillator assembly.
K	Replacement or repair of module requires alignment of 108 MHz Bandpass Filter assembly.
L	Replacement or repair of module requires alignment of 100 MHz Amplifier/108 MHz Mixer assembly.
M	Repair by replacement of next higher assembly.

APPENDIX F

PINOUT TABLE FOR EXT ACC CONNECTOR

The table below provides pin assignments for the EXT ACC Connector located on front panel of the AN/GRM-114. This connector provides power and signal sources for external accessory equipment used with the AN/GRM-114.

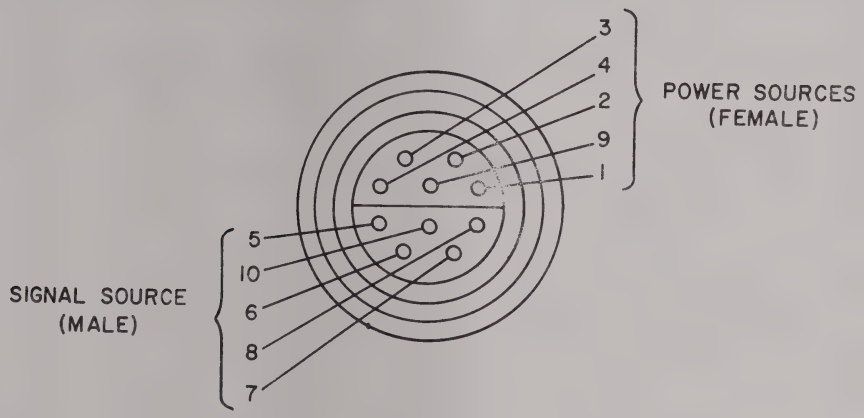

EXT ACC CONNECTOR (Front View)

CONNECTOR PIN ASSIGNMENTS			
Pin No.	Power Source	Pin No.	Signal Source
1	+12 V	5	External Modulation
2	+11 V	6	Tone Keying
3	+5 V	7	Microphone Keying
4	−12 V	8	Demodulated Signal Out
9	Ground	10	Signal Ground

☆U.S. GOVERNMENT PRINTING OFFICE: 1982-505-028/85

RECOMMENDED CHANGES TO EQUIPMENT TECHNICAL PUBLICATIONS

SOMETHING WRONG WITH THIS PUBLICATION?

FROM: (PRINT YOUR UNIT'S COMPLETE ADDRESS)
Commander
Stateside Army Depot
ATTN: AMSTA-US
Stateside, N.J. 07703

DATE SENT
10 July 1975

PUBLICATION NUMBER	PUBLICATION DATE	PUBLICATION TITLE
TM 11-5840-340-12	23 Jan 74	Radar Set AN/PRC-76

BE EXACT PIN-POINT WHERE IT IS				IN THIS SPACE TELL WHAT IS WRONG AND WHAT SHOULD BE DONE ABOUT IT:
PAGE NO	PARA-GRAPH	FIGURE NO	TABLE NO	
2-25	2-28			Recommend that the installation antenna alignment procedure be changed throughout to specify a 2° IFF antenna lag rather than 1°. REASON: Experience has shown that with only a 1° lag, the antenna servo system is too sensitive to wind gusting in excess of 25 knots, and has a tendency to rapidly accelerate and decelerate as it hunts, causing strain to the drive train. Hunting is minimized by adjusting the lag to 2° without degradation of operation.
3-10	3-3		3-1	Item 5, Function column. Change "2 db" to "3db." REASON: The adjustment procedure the the TRANS POWER FAULT indicator calls for a 3 db (500 watts) adjustment to light the TRANS POWER FAULT indicator.
5-6	5-8			Add new step f.1 to read, "Replace cover plate removed in step e.1, above." REASON: To replace the cover plate.
		FO3		Zone C 3. On J1-2, change "+24 VDC to "+5 VDC." REASON: This is the output line of the 5 VDC power supply. +24 VDC is the input voltage.

SAMPLE

PRINTED NAME, GRADE OR TITLE, AND TELEPHONE NUMBER
SSG I. M. DeSpiritof 999-1776

SIGN HERE: SSG I. M. DeSpiritof

DA FORM 1 JUL 79 2028-2 PREVIOUS EDITIONS ARE OBSOLETE.

P.S.--IF YOUR OUTFIT WANTS TO KNOW ABOUT YOUR RECOMMENDATION MAKE A CARBON COPY OF THIS AND GIVE IT TO YOUR HEADQUARTERS

TEAR ALONG PERFORATED LINE

RECOMMENDED CHANGES TO EQUIPMENT TECHNICAL PUBLICATIONS

SOMETHING WRONG WITH THIS PUBLICATION?

THEN...JOT DOWN THE DOPE ABOUT IT ON THIS FORM. CAREFULLY TEAR IT OUT, FOLD IT AND DROP IT IN THE MAIL.

FROM: (PRINT YOUR UNIT'S COMPLETE ADDRESS)

DATE SENT

PUBLICATION NUMBER	PUBLICATION DATE	PUBLICATION TITLE
TM 11-6625-3016-14		Test Set, Radio AN/GRM-114

BE EXACT PIN-POINT WHERE IT IS

PAGE NO.	PARA-GRAPH	FIGURE NO.	TABLE NO.

IN THIS SPACE TELL WHAT IS WRONG AND WHAT SHOULD BE DONE ABOUT IT:

PRINTED NAME GRADE OR TITLE AND TELEPHONE NUMBER

SIGN HERE

DA FORM 1 JUL 79 2028-2

PREVIOUS EDITIONS ARE OBSOLETE

P.S.--IF YOUR OUTFIT WANTS TO KNOW ABOUT YOUR RECOMMENDATION MAKE A CARBON COPY OF THIS AND GIVE IT TO YOUR HEADQUARTERS.

TEAR ALONG PERFORATED LINE

REVERSE OF DA FORM 2028-2

TEAR ALONG PERFORATED LINE

FILL IN YOUR UNIT'S ADDRESS

FOLD BACK

DEPARTMENT OF THE ARMY

POSTAGE AND FEES PAID
DEPARTMENT OF THE ARMY
DOD 314

U.S. MAIL

OFFICIAL BUSINESS
PENALTY FOR PRIVATE USE $300

Commander
US Army Communications-
Electronics Command
ATTN: DRSEL-ME-MQ
Fort Monmouth, New Jersey 07703

RECOMMENDED CHANGES TO EQUIPMENT TECHNICAL PUBLICATIONS

SOMETHING WRONG WITH THIS PUBLICATION?

THEN...JOT DOWN THE DOPE ABOUT IT ON THIS FORM. CAREFULLY TEAR IT OUT, FOLD IT AND DROP IT IN THE MAIL.

FROM: (PRINT YOUR UNIT'S COMPLETE ADDRESS)

DATE SENT

PUBLICATION NUMBER	PUBLICATION DATE	PUBLICATION TITLE
TM 11-6625-3016-14		Test Set, Radio AN/GRM-114

BE EXACT PIN-POINT WHERE IT IS

PAGE NO.	PARA-GRAPH	FIGURE NO.	TABLE NO.

IN THIS SPACE TELL WHAT IS WRONG AND WHAT SHOULD BE DONE ABOUT IT:

PRINTED NAME GRADE OR TITLE AND TELEPHONE NUMBER

SIGN HERE

DA FORM 1 JUL 79 2028-2

PREVIOUS EDITIONS ARE OBSOLETE

P.S.--IF YOUR OUTFIT WANTS TO KNOW ABOUT YOUR RECOMMENDATION MAKE A CARBON COPY OF THIS AND GIVE IT TO YOUR HEADQUARTERS.

TEAR ALONG PERFORATED LINE

REVERSE OF DA FORM 2028-2

FILL IN YOUR UNIT'S ADDRESS

FOLD BACK

DEPARTMENT OF THE ARMY

OFFICIAL BUSINESS
PENALTY FOR PRIVATE USE $300

POSTAGE AND FEES PAID
DEPARTMENT OF THE ARMY
DOD 314

U.S. MAIL

TEAR ALONG PERFORATED LINE

Commander
US Army Communications-
Electronics Command
ATTN: DRSEL-ME-MQ
Fort Monmouth, New Jersey 07703

RECOMMENDED CHANGES TO EQUIPMENT TECHNICAL PUBLICATIONS

SOMETHING WRONG WITH THIS PUBLICATION?

THEN...JOT DOWN THE DOPE ABOUT IT ON THIS FORM. CAREFULLY TEAR IT OUT, FOLD IT AND DROP IT IN THE MAIL.

FROM: (PRINT YOUR UNIT'S COMPLETE ADDRESS)

DATE SENT

PUBLICATION NUMBER	PUBLICATION DATE	PUBLICATION TITLE
TM 11-6625-3016-14		Test Set, Radio AN/GRM-114

BE EXACT PIN-POINT WHERE IT IS

PAGE NO.	PARA-GRAPH	FIGURE NO.	TABLE NO.

IN THIS SPACE TELL WHAT IS WRONG
AND WHAT SHOULD BE DONE ABOUT IT:

PRINTED NAME GRADE OR TITLE AND TELEPHONE NUMBER

SIGN HERE

DA FORM 1 JUL 79 2028-2

PREVIOUS EDITIONS ARE OBSOLETE

P.S.--IF YOUR OUTFIT WANTS TO KNOW ABOUT YOUR RECOMMENDATION MAKE A CARBON COPY OF THIS AND GIVE IT TO YOUR HEADQUARTERS.

TEAR ALONG PERFORATED LINE

REVERSE OF DA FORM 2028-2

FILL IN YOUR UNIT'S ADDRESS

FOLD BACK

DEPARTMENT OF THE ARMY

POSTAGE AND FEES PAID
DEPARTMENT OF THE ARMY
DOD 314

OFFICIAL BUSINESS
PENALTY FOR PRIVATE USE $300

TEAR ALONG PERFORATED LINE

Commander
US Army Communications-
Electronics Command
ATTN: DRSEL-ME-MQ
Fort Monmouth, New Jersey 07703

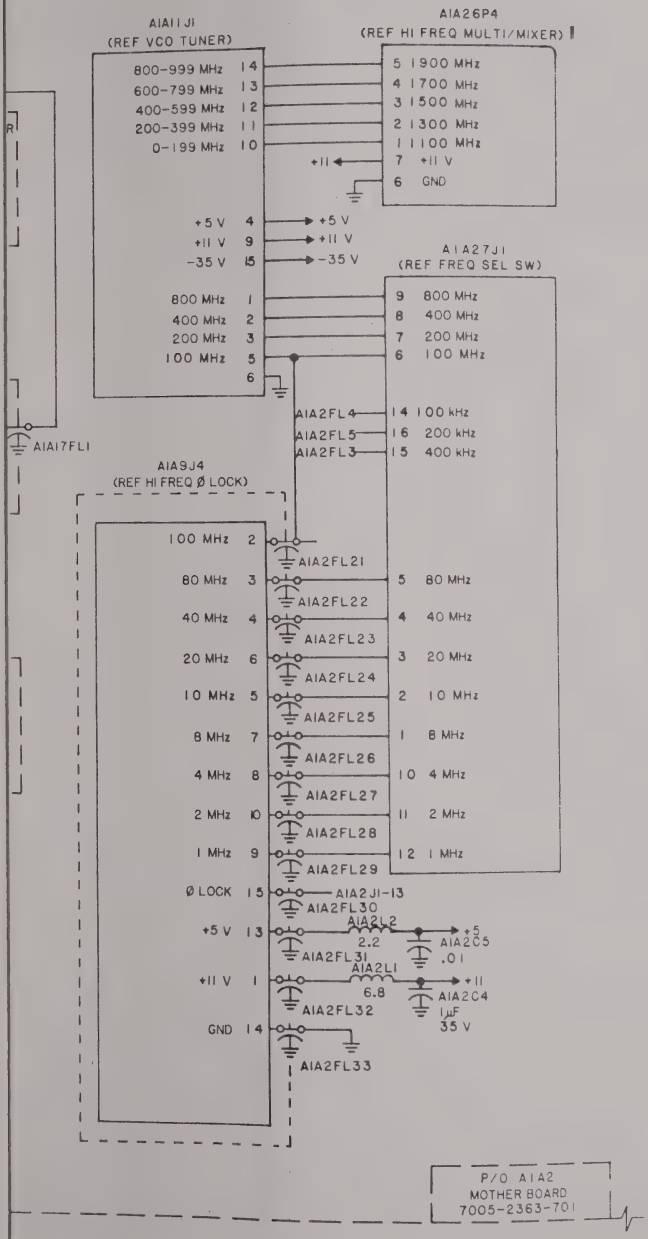

Figure 6-1. AN/GRM-114 motherboard A1A2, schematic diagram (sheet 1 of 2).

REVERSE OF DA FORM 2028-2

FILL IN YOUR UNIT'S ADDRESS

FOLD BACK

DEPARTMENT OF THE ARMY

POSTAGE AND FEES PAID
DEPARTMENT OF THE ARMY
DOD 314

OFFICIAL BUSINESS
PENALTY FOR PRIVATE USE $300

Commander
US Army Communications-
Electronics Command
ATTN: DRSEL-ME-MQ
Fort Monmouth, New Jersey 07703

TEAR ALONG PERFORATED LINE

NOTES:

1. LAST REF NO USED:
   AA2C3
   FL34
   J4
   L2
   Q2
   R2
   A1A9J4
   A1A10J2
   A1A11J1
   A1A13J1
   A1A14J1
   A1A26P4
   A1A27P2
2. ALL POLARIZED CAPACITORS ARE TANTALUM.
3. ALL REF NO'S CARRY AN ASSIGNED DESIGNATOR SERIES (e.g. THIS SCHEMATIC CARRIES SERIES A1A2; THEREFORE R1 IS DESIGNATED A1A2R1).

A1A2
MOTHER BOARD
7005-2363-701

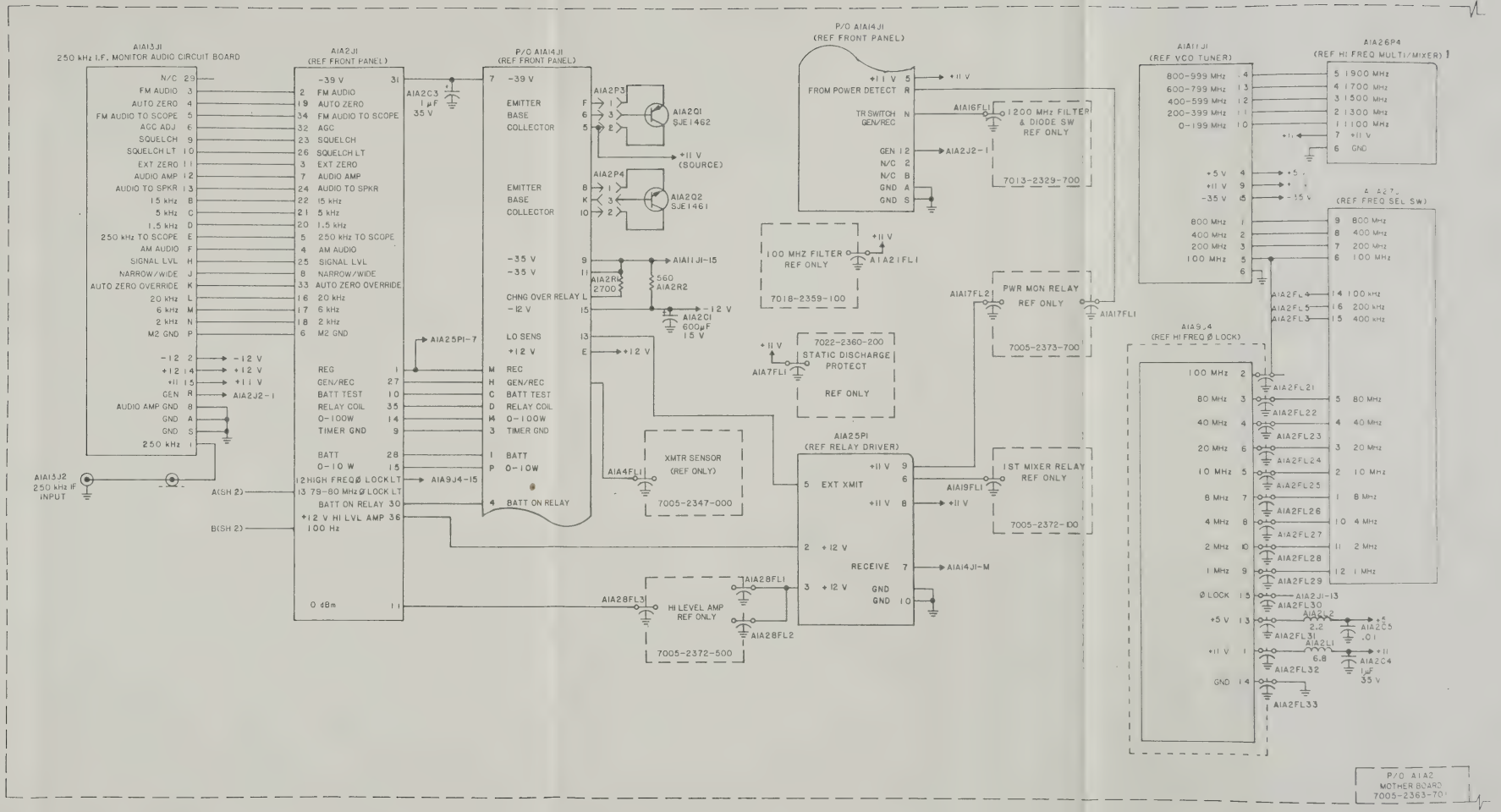

Figure 6-1. AN/GRM-114 motherboard A1A2, schematic diagram (sheet 1 of 2).

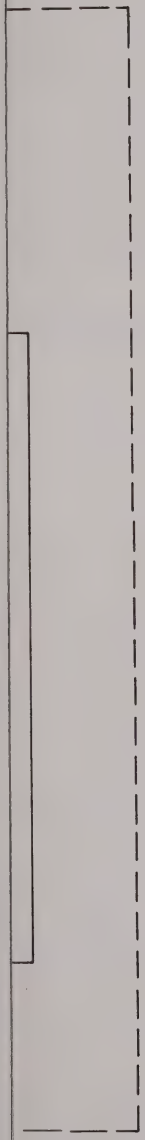

Figure 6-1. AN/GRM-114 motherboard A1A2, schematic diagram (sheet 2 of 2).

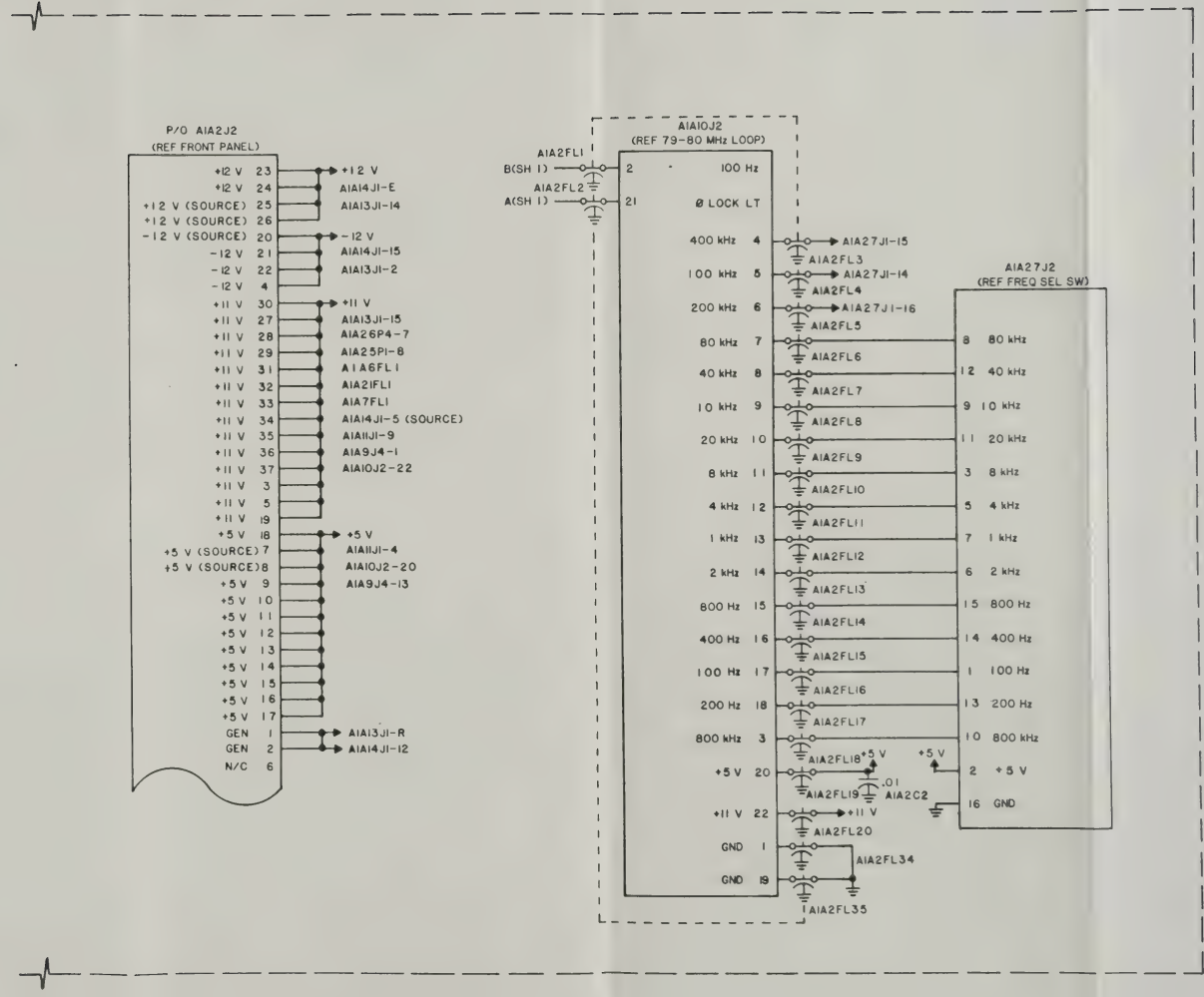

Figure 6-1. AN/GRM-114 motherboard A1A2, schematic diagram (sheet 2 of 2).

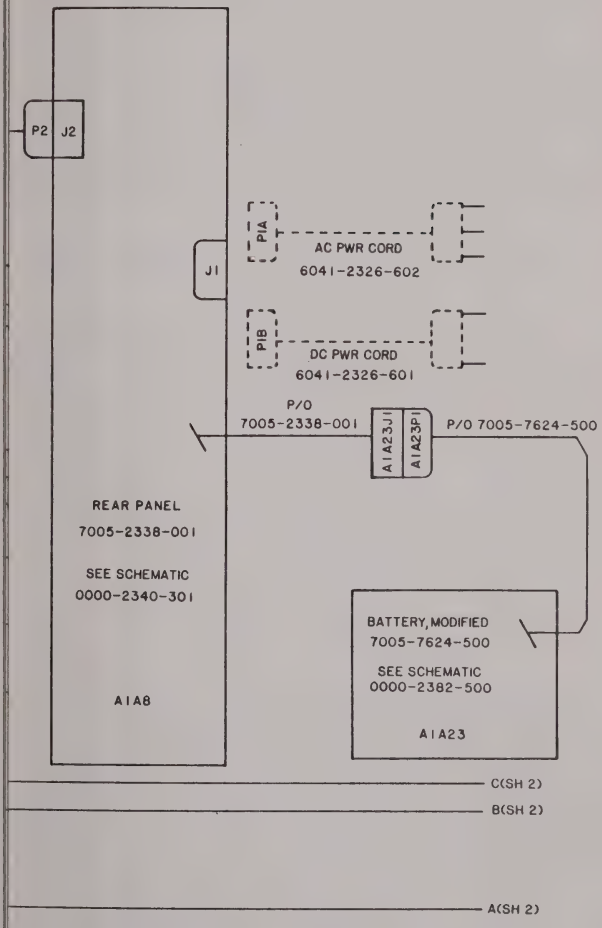

Figure 6-2. AN/GRM-114 interconnect A1, schematic diagram (sheet 1 of 2).

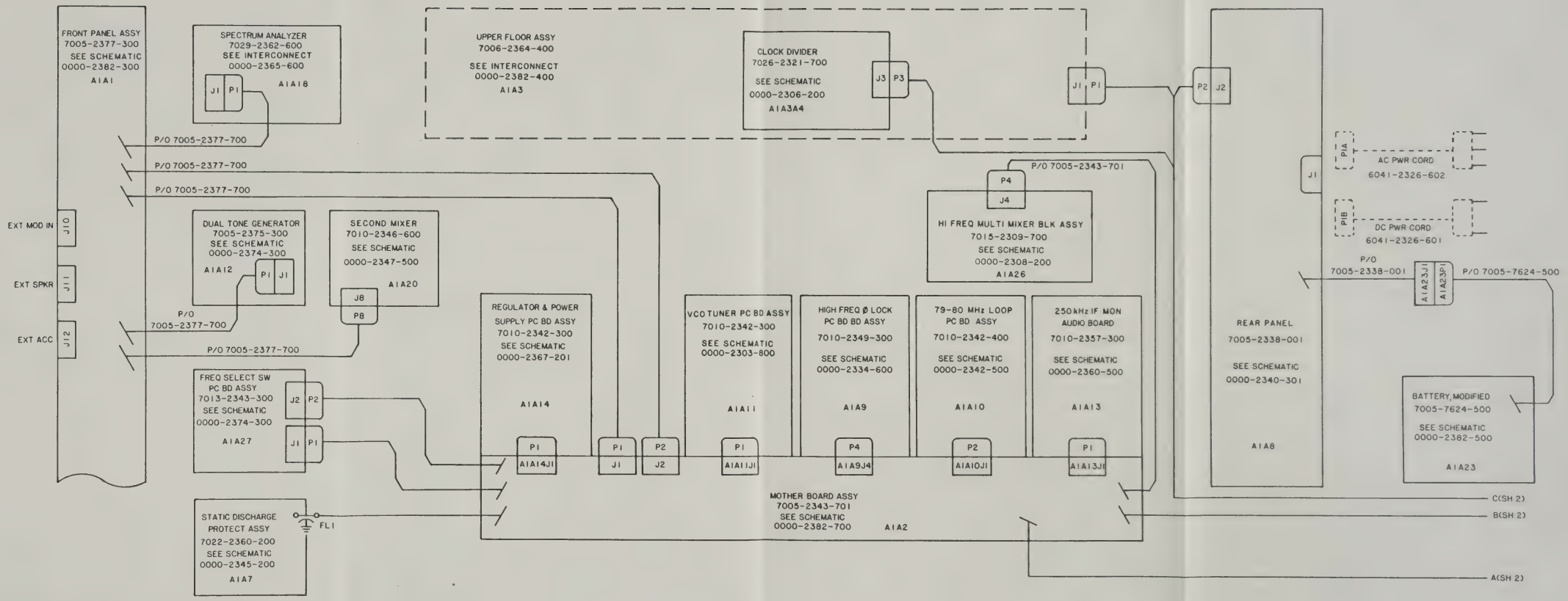

Figure 6-2. AN/GRM-114 interconnect A1, schematic diagram (sheet 1 of 2).

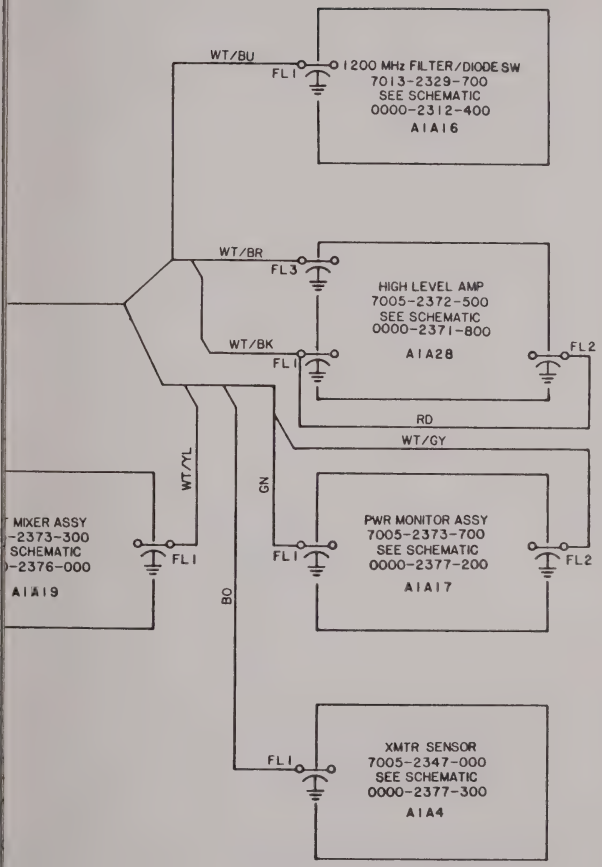

Figure 6-2. AN/GRM-114 interconnect A1, schematic diagram (sheet 2 of 2).

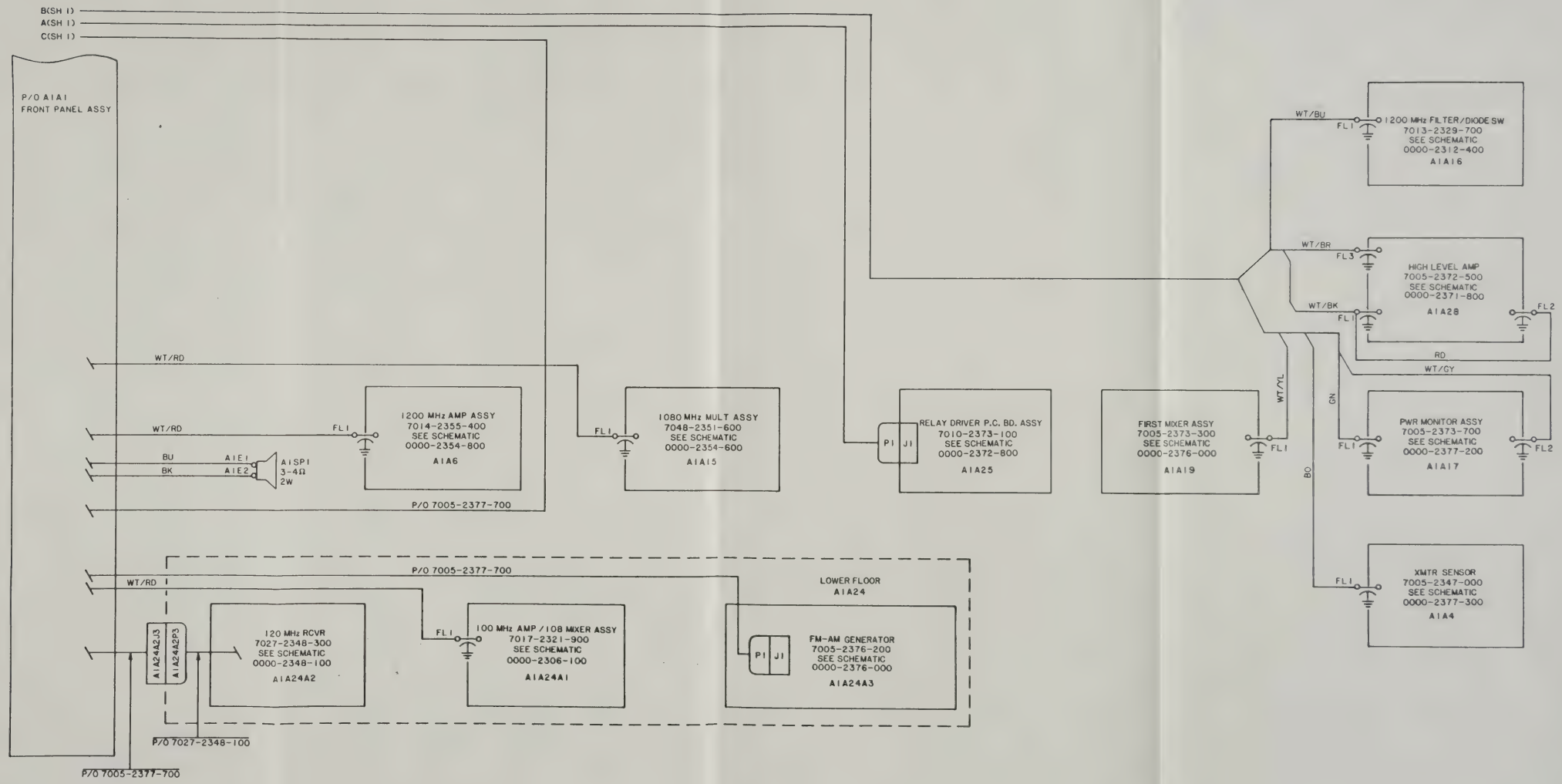

Figure 6-2. AN/GRM-114 interconnect A1, schematic diagram (sheet 2 of 2).

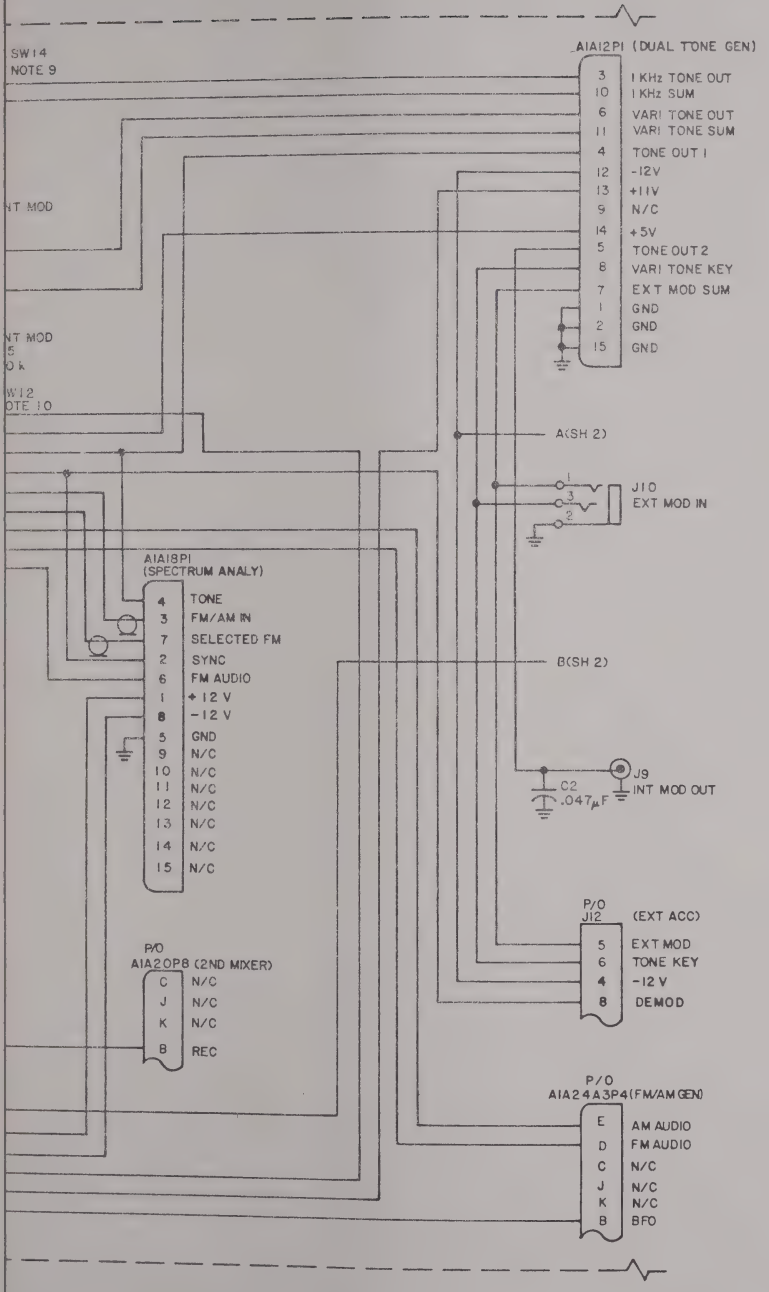

Figure 6-3. AN/GRM-114 front panel assembly A1A1, schematic diagram (sheet 1 of 2).

A1A1

1. LAST REF NO USED:

A1E2	A1A1J12	A1A3A4P3	A1A18P1
A1S91	A1A1R11	A1A6FL1	A1A20P8
A1A1C2	A1A1SW15	A1A8P2	A1A21FL1
A1A1CR2	A1A2P2	A1A12P1	A1A24A2J3
A1A1DS5	A1A3P1	A1A15A1FL1	A1A24A3P4

2. ALL RESISTORS ARE 1/2W, 10% UNLESS OTHERWISE NOTED.
3. ALL RESISTANCE IS EXPRESSED IN OHMS UNLESS OTHERWISE NOTED.
4. CONTACT ARRANGEMENT FOR A1A1SW6 BANDWIDTH

5. A1A1SW4 IS GANGED TO A1A1R4 AND IS NORMALLY CLOSED, CONTACTS OPEN WHEN A1A1R4 IS FULLY CCW.
6. CONTACT ARRANGEMENT FOR A1A1SW5, PWR-OFF-BATT.

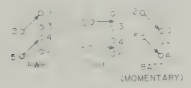

7. CONTACT ARRANGEMENT FOR A1A1SW13, HI-μV X 100-NORM.

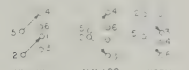

8. CONTACT ARRANGEMENT FOR A1A1SW15, AUTO-OFF-BATT.

9. A1A1SW14 IS GANGED TO A1A1R7 AND IS NORMALLY CLOSED, CONTACTS OPEN WHEN A1A1R7 IS FULLY CCW.
10. A1A1SW12 IS GANGED TO A1A1R5 AND IS NORMALLY CLOSED, CONTACTS OPEN WHEN A1A1R5 IS FULLY CCW.
11. ALL REF NO'S CARRY AN ASSIGNED DESIGNATOR SERIES (e.g. THIS SCHEMATIC CARRIES SERIES A1A1 THEREFORE RESISTOR R1 IS A1A1R1).

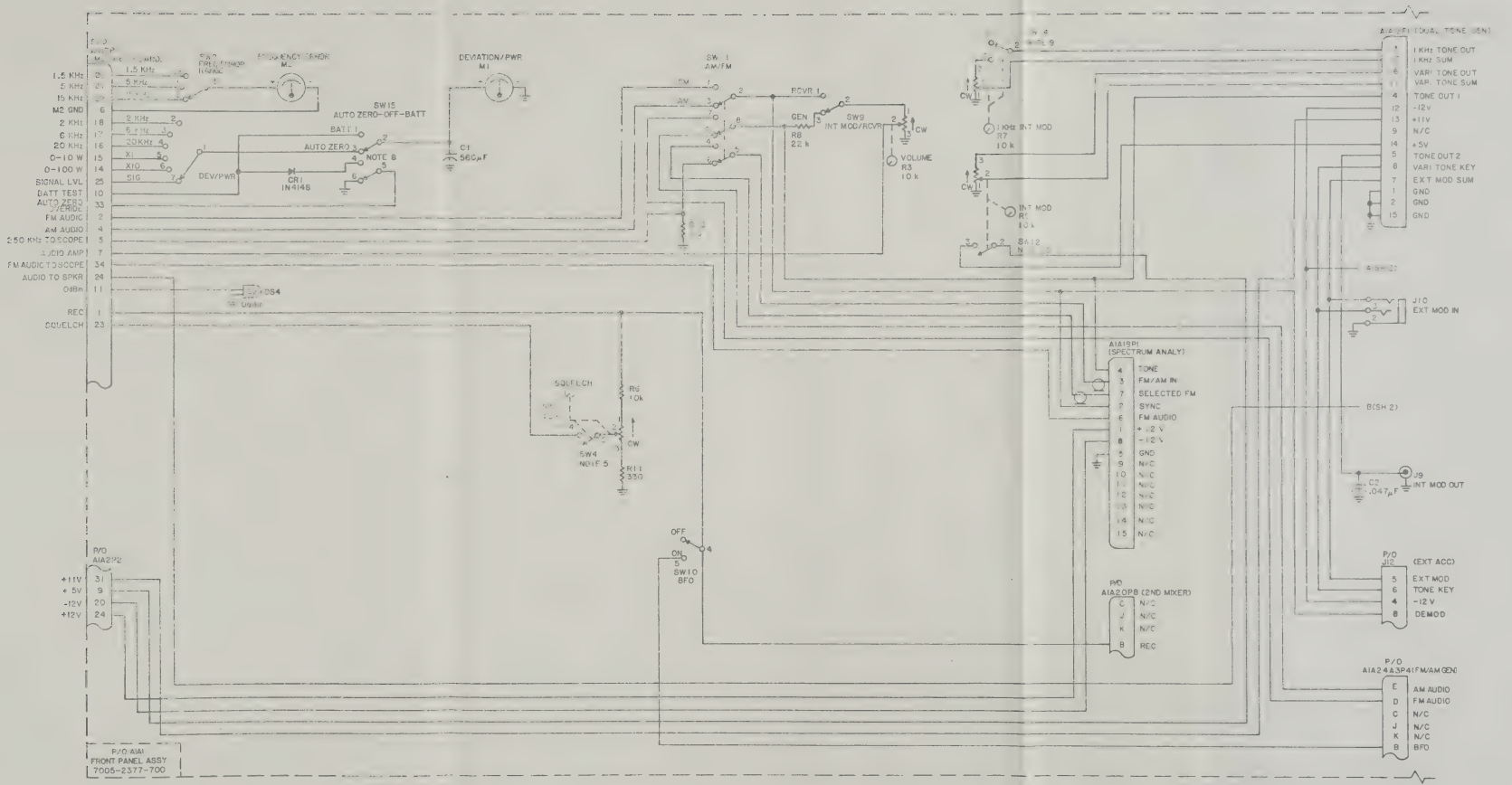

Figure 6-3. AN/GRM-114 front panel assembly A1A1, schematic diagram (sheet 1 of 2).

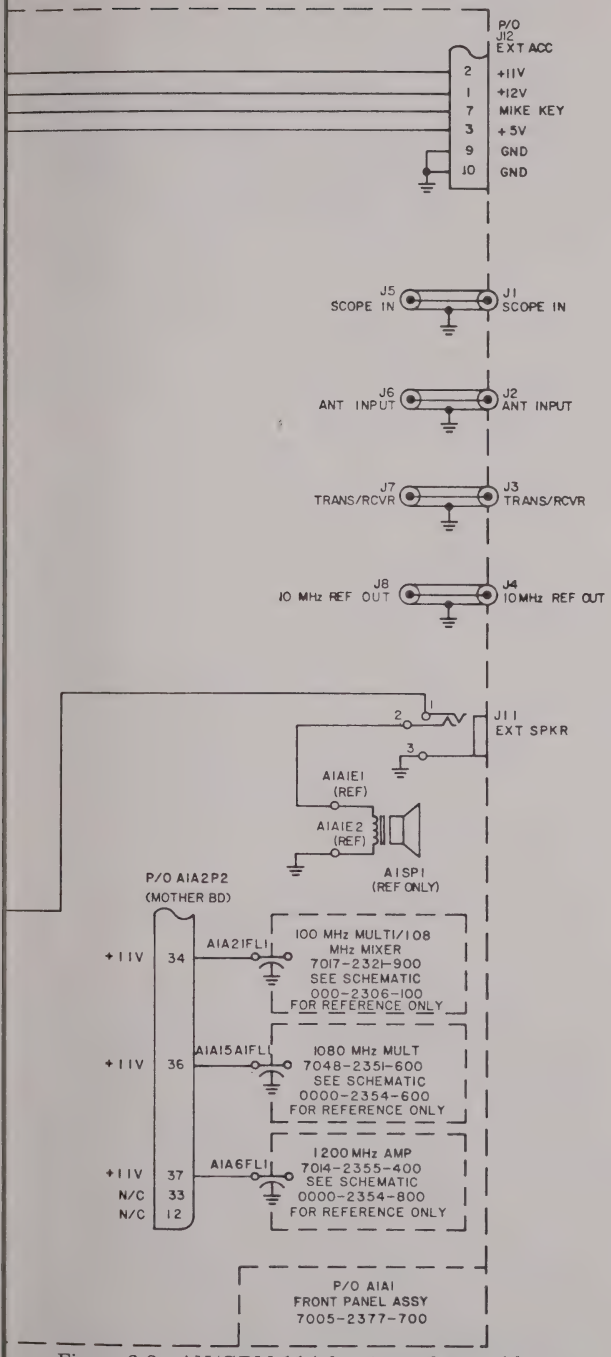

Figure 6-3. AN/GRM-114 front panel assembly A1A1, schematic diagram (sheet 2 of 2).

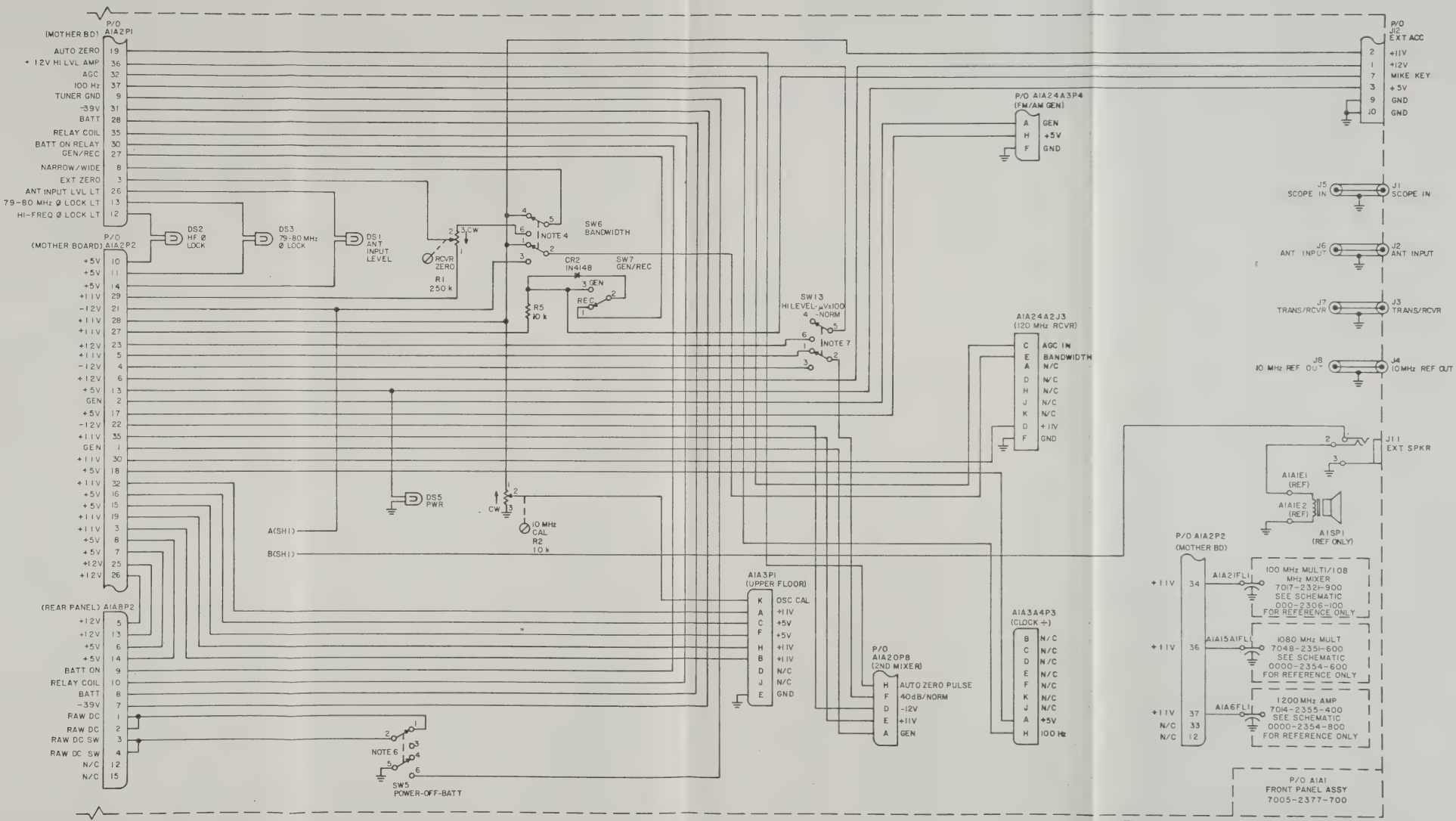

Figure 6-3. AN/GRM-114 front panel assembly A1A1, schematic diagram (sheet 2 of 2).

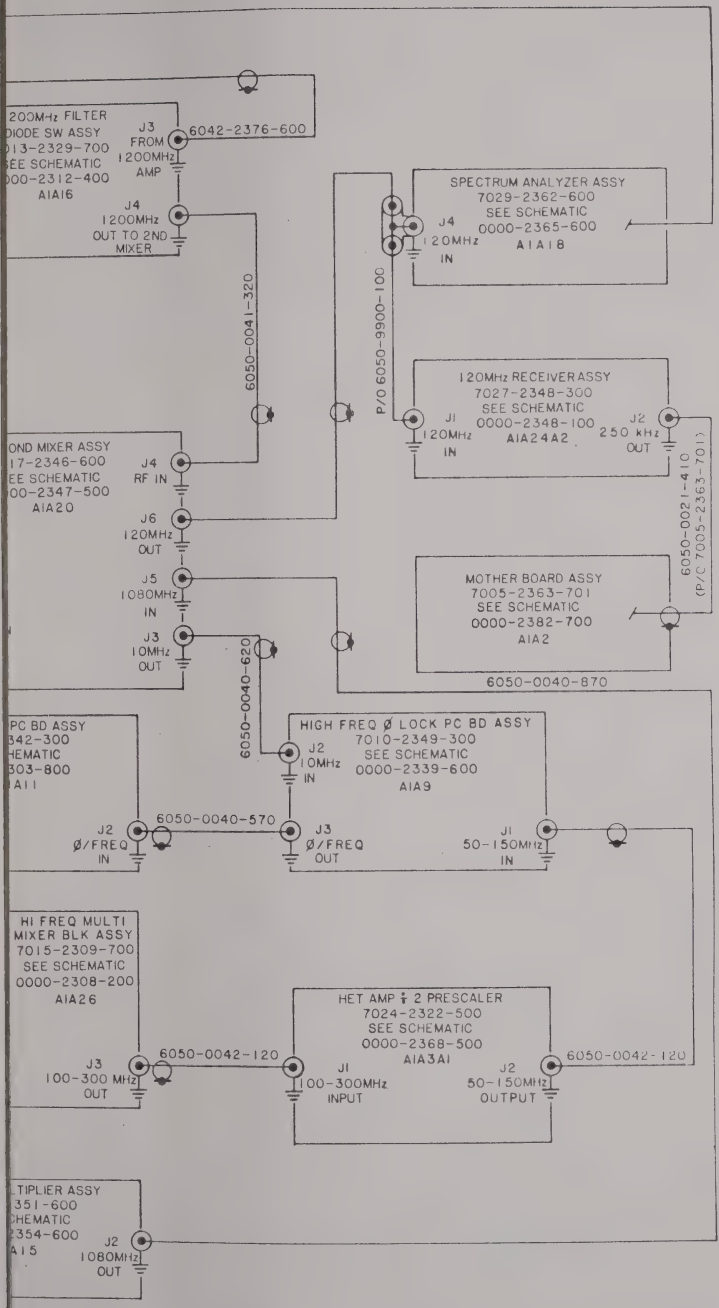

Figure 6-4. AN/GRM-114 coaxial cable assembly A1A22, schematic diagram.

NOTES:

1. FOR PURPOSE OF CLARITY, INTERCONNECTING CABLE ENDS ARE NOT LABLED WITH A REFERENCE DESIGNATOR. EACH CABLE END HOWEVER CARRIES THE DESIGNATOR SERIES AND NUMBER OF ITS MATING JACK.

EXAMPLES:

A.) CABLE END CONNECTING TO A1A24A3J3 CARRIES DESIGNATOR A1A24A3P3

B.) CABLE END CONNECTING TO A1AT1-J1 CARRIES DESIGNATOR A1AT1-P1

BOTH JACKS AND PLUG DESIGNATORS ARE PROVIDED FOR COMPONENTS / ASSEMBLIES WHICH CONNECT W/O USE OF INTERCONNECTING CABLES.

THESE CONNECTIONS ARE:

A1A4J2 MATES TO A1A8AJ1-P1
A1A17J1 MATES TO A1A27AJ1 -P1
A1A8AT1-J2 MATES TO A1A17P2

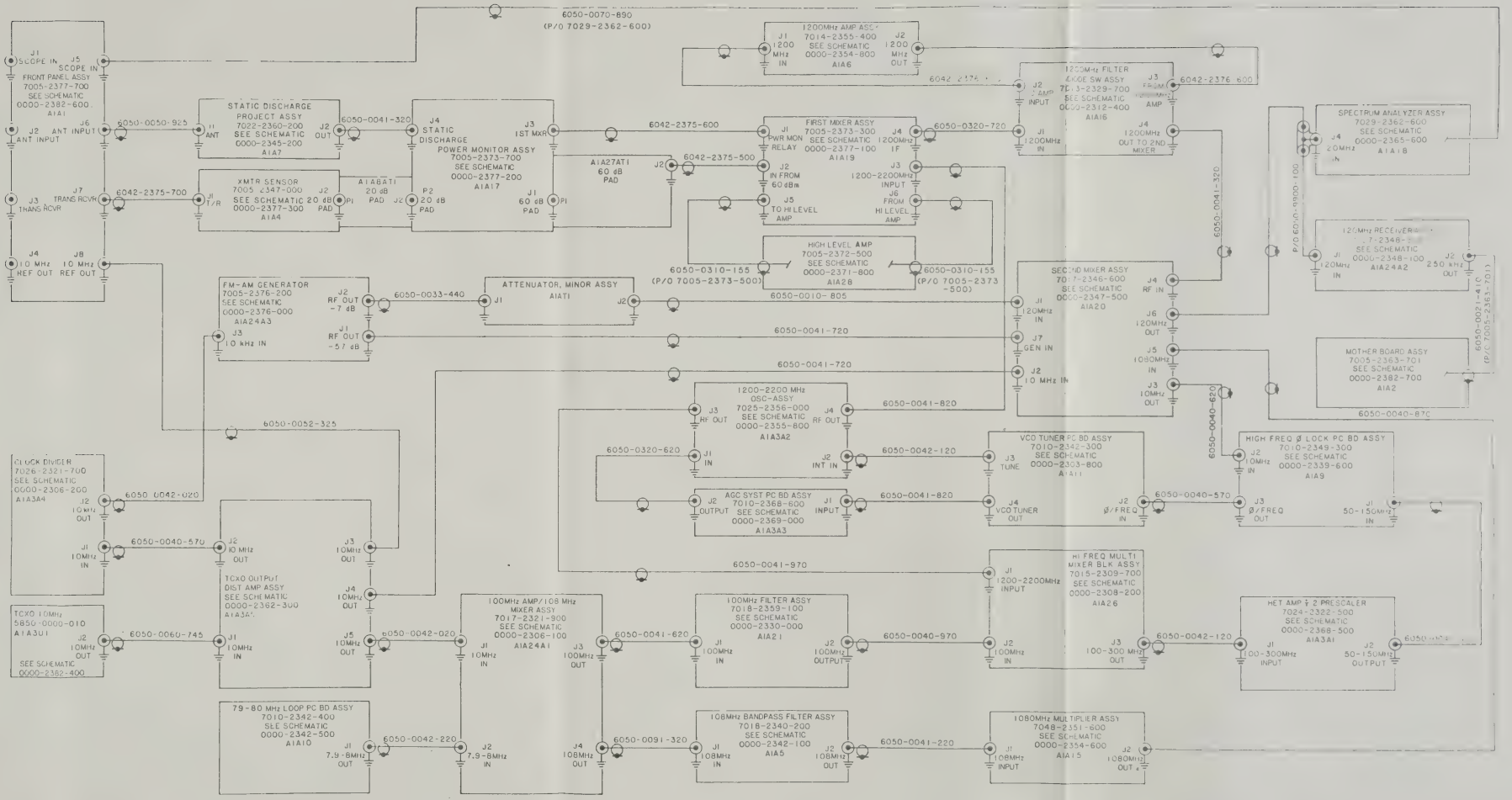

Figure 6-4. AN/GRM-114 coaxial cable assembly A1A22, schematic diagram.

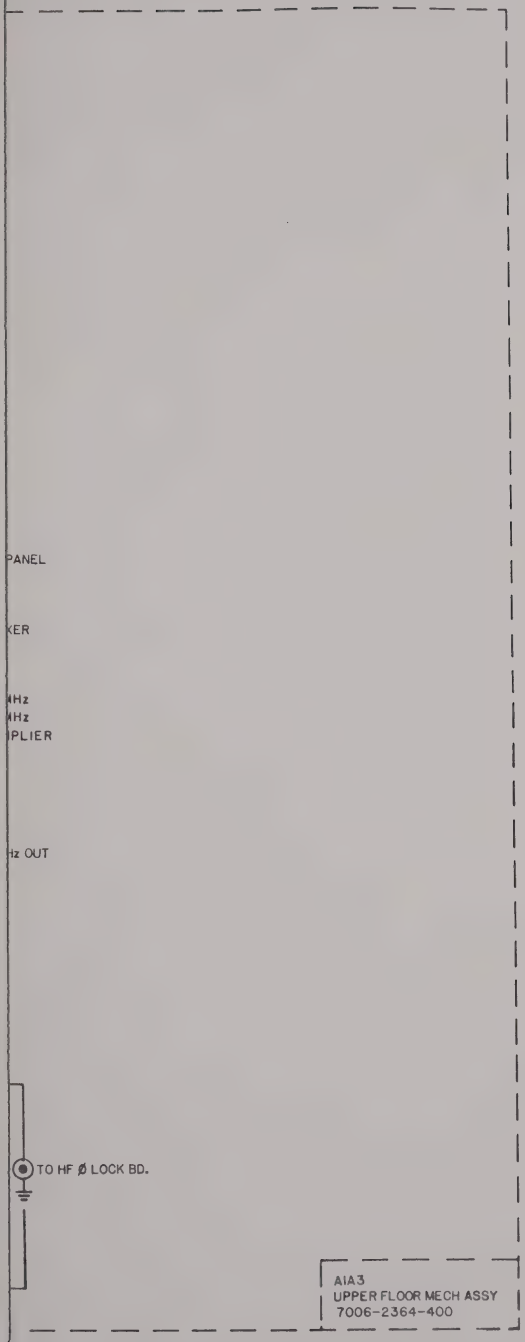

Figure 6-5. AN/GRM-114 upper floor assembly A1A3, schematic diagram.

NOTES:

1. ALL REF NOS CARRY AN ASSIGNED DESIGNATOR SERIES (e.g. THIS SCHEMATIC CARRIES SERIES A1A3, A1A3A1, A1A3A2, A1A3A3, A1A3A4, A1A3A5, A1A3U1). THEREFORE, J3 ON ASSY A1A3A5 IS DESIGNATED A1A3A5J3.

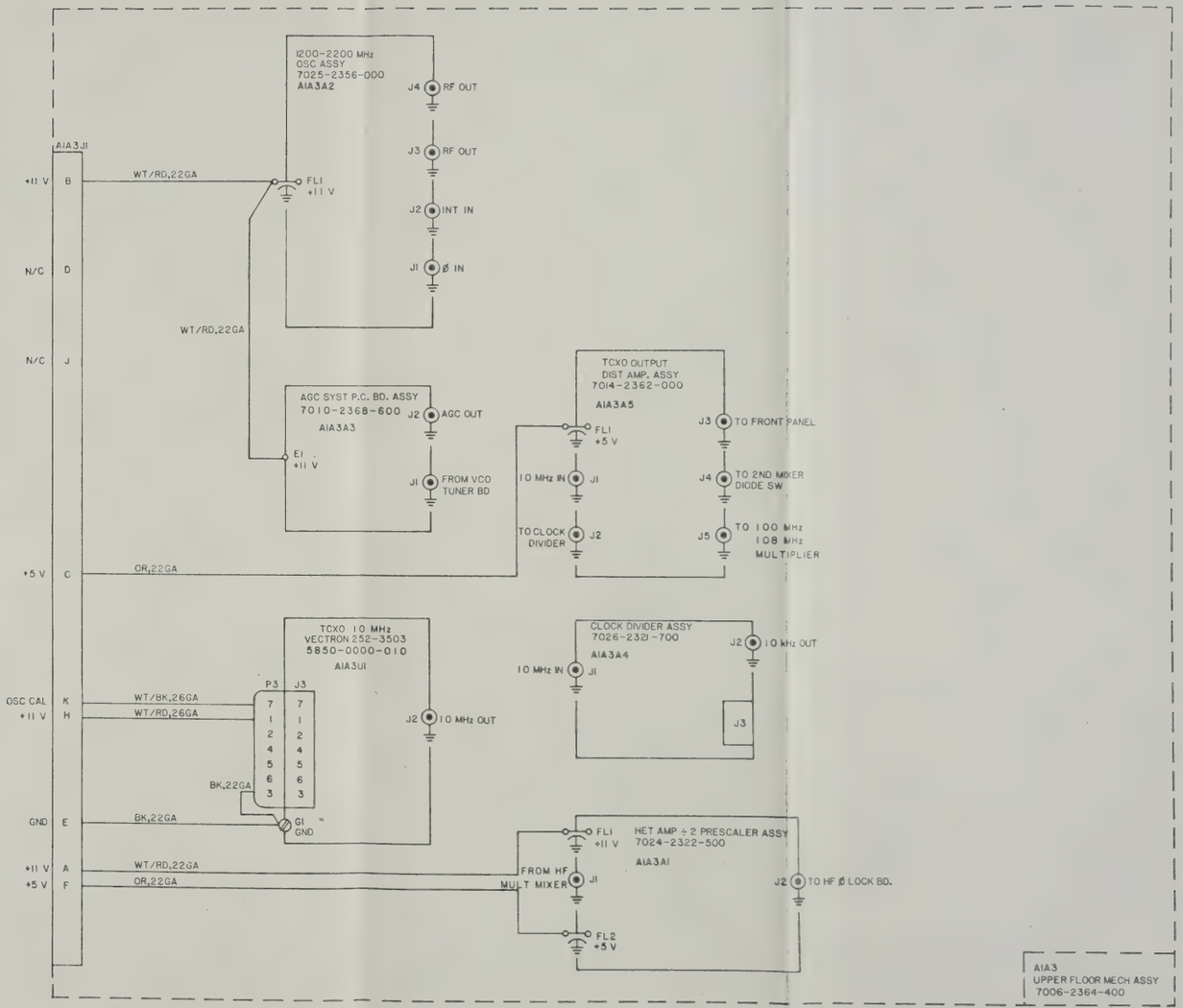

Figure 6-5. AN/GRM-114 upper floor assembly A1A3, schematic diagram.

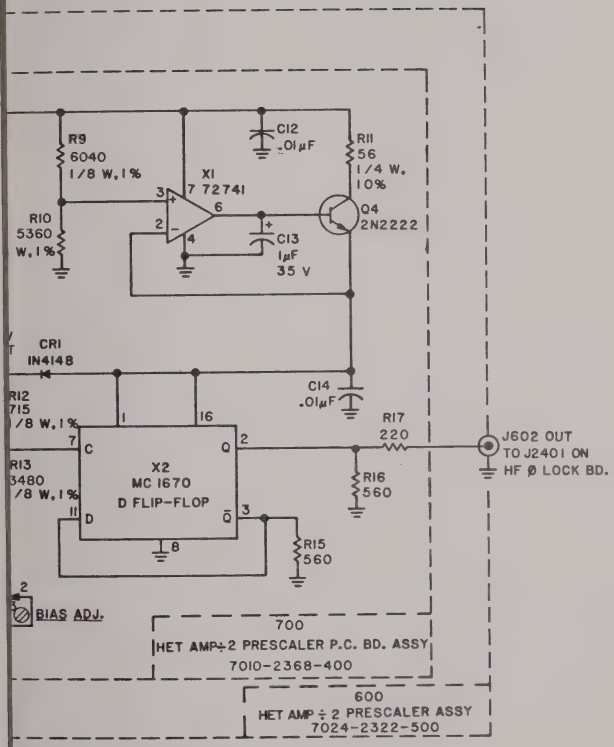

Figure 6-6. Heterodyne amplifier ÷2 prescaler A1A3A1, schematic diagram.

DRAFTSMAN NOTES:

ON SHT 1 J601 BECOMES A1A3AIJ1
J602 A1A3AIJ2
FL601 A1A3AIFL1
FL602 A1A3AIFL2
J2401 A1A9J1

NOTES:

1. LAST REF NO USED:
   A1A3AIFL2
   A1A3AIJ2
   A1A3AIAICI4
   A1A3AIAICRI
   A1A3AIAIE2
   A1A3AIAIL5
   A1A3AIAIQ4
   A1A3AIAIRI7
   A1A3AIAIX2
2. ALL RESISTORS ARE 1/8 W, 10% UNLESS OTHERWISE NOTED.
3. ALL RESISTANCE IS EXPRESSED IN OHMS UNLESS OTHERWISE NOTED.
4. ALL CAPACITANCE IS EXPRESSED IN PICOFARADS UNLESS OTHERWISE NOTED.
5. ALL REF NO'S CARRY AN ASSIGNED DESIGNATOR SERIES (e.g. THIS SCHEMATIC CARRIES SERIES A1A3AI, A1A3A1A1: THEREFORE, R1 IS DESIGNATED A1A3A1A1R1).

A1A3AI
HET AMP ÷ 2 PRESCALER
ASSY
7024-2322-500

A1A3A1A1
HET AMP ÷ 2 PRESCALER
P.C. BD. ASSY
7010-2368-400

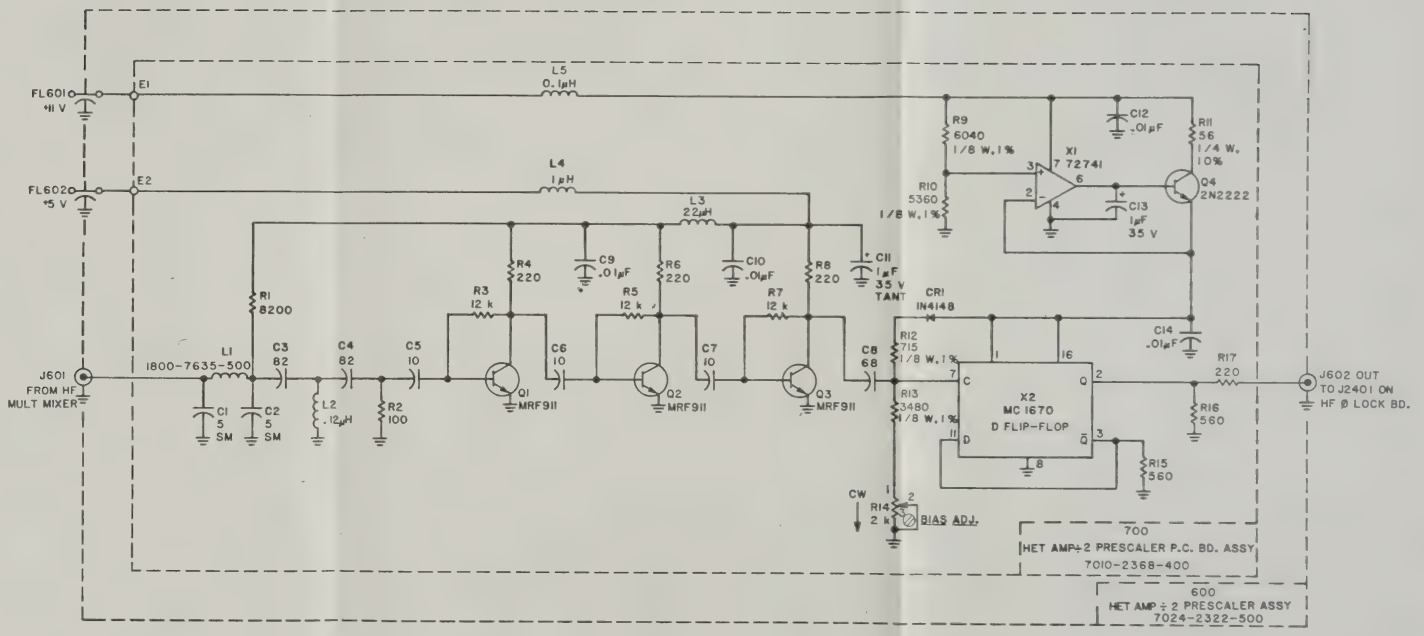

Figure 6-6. Heterodyne amplifier ÷2 prescaler A1A3A1, schematic diagram.

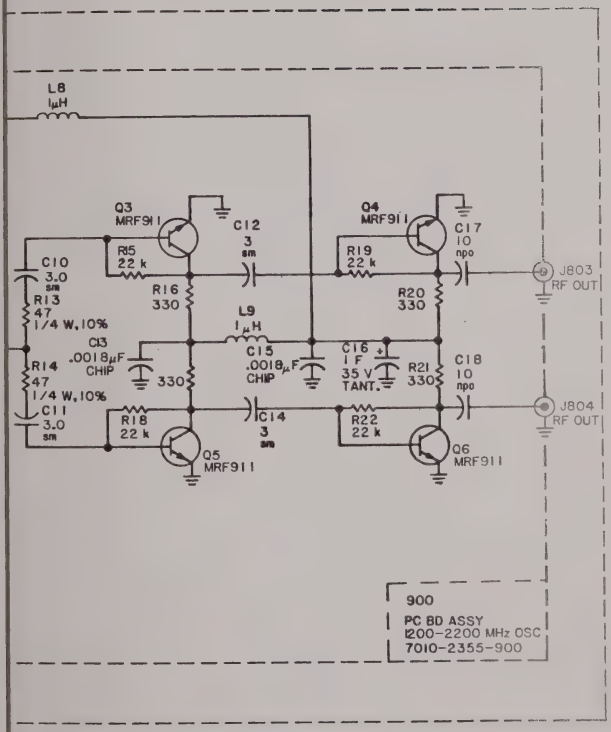

Figure 6-7. 1200-2200 MHz oscillator A1A3A2, schematic diagram.

NOTES:

1. LAST REF NO USED:
   A1A3A2C2
   A1A3A2FL1
   A1A3A2G1
   A1A3A2J4
   A1A3A2R1
   A1A3A2L2
   A1A3A2A1C18
   A1A3A2A1CR2
   A1A3A2A1E1
   A1A3A2A1L9
   A1A3A2A1Q6
   A1A3A2A1R22

2. ALL RESISTORS ARE 1/8 W, 10% UNLESS OTHERWISE NOTED.

3. ALL RESISTANCE IS EXPRESSED IN OHMS UNLESS OTHERWISE NOTED.

4. ALL CAPACITANCE IS EXPRESSED IN PICO FARADS UNLESS OTHERWISE NOTED.

5. L2,L3,L4,L5,&L6 ARE 1800-2359-700.

6. L7 IS FORMED BY THE STRAY INDUCTANCE OF A 0.1" LENGTH OF 22 AWG BUS WIRE.

7. ALL REF NO'S CARRY AN ASSIGNED DESIGNATOR SERIES (e.g. THIS DWG. CARRIES SERIES A1A3A2 & A1A3A2A1; THEREFORE R1 IS DESIGNATED A1A3A2A1R1).

DRAFTSMAN NOTES:

ON SHT 1 J801 BECOMES A1A3A2J1
J802 A1A3A2J2
J803 A1A3A2J3
J804 A1A3A2J4
FL801 A1A3A2FL1

A1A3A2
MECH ASSY,
1200-2200 MHz OSC
7025-2356-000

A1A3A2A1
PCB ASSY,
1200-2200 MHz OSC
7010-2355-900

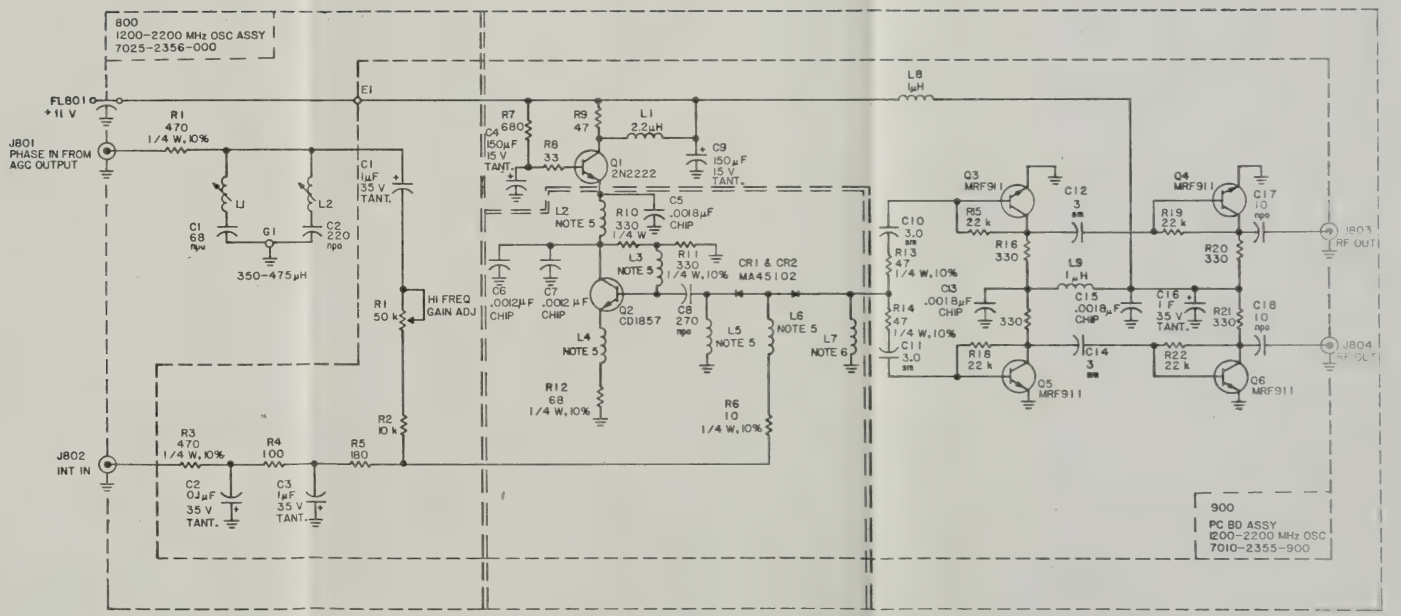

Figure 6-7. 1200-2200 MHz oscillator A1A3A2, schematic diagram.

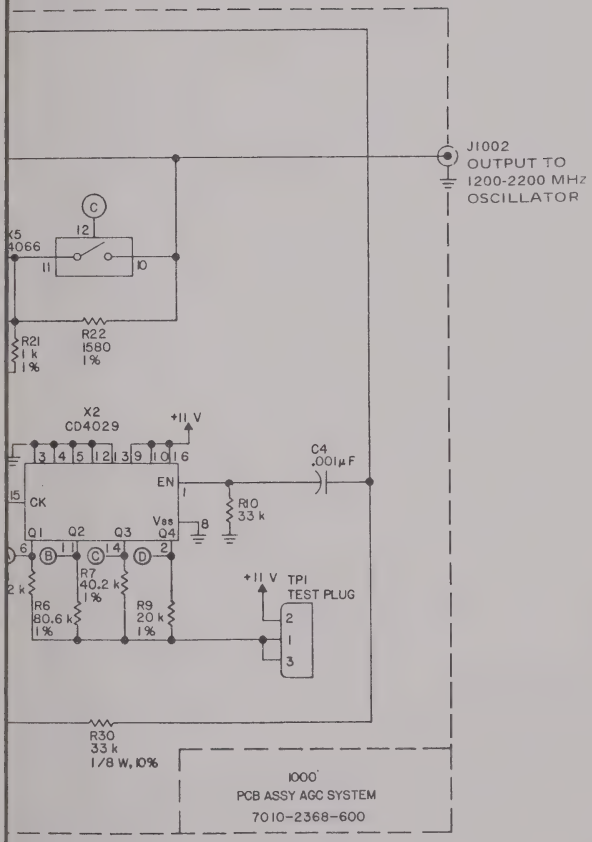

Figure 6-8. AGC system A1A3A3, schematic diagram.

NOTES:

1. LAST REF NO USED:
   A1A3A3C10
   A1A3A3CR2
   A1A3A3E1
   A1A3A3J2
   A1A3A3Q2
   A1A3A3R30
   A1A3A3X6

DRAFTSMAN NOTE:

ON SHT 1 J1001 BECOMES A1A3A3J1
J1002 A1A3A3J2
E1001 A1A3A3E1

2. ALL RESISTORS ARE 1/4 W, 10% UNLESS OTHERWISE NOTED.

3. ALL RESISTANCE IS EXPRESSED IN OHMS UNLESS OTHERWISE NOTED.

4. ALL REF NO'S CARRY AN ASSIGNED DESIGNATOR SERIES (e.g. THIS SCHEMATIC CARRIES SERIES A1A3A3; THEREFORE, R1 IS DESIGNATED A1A3A3R1).

A1A3A3
AGC SYST
PC. BD. ASSY
7010-2368-600

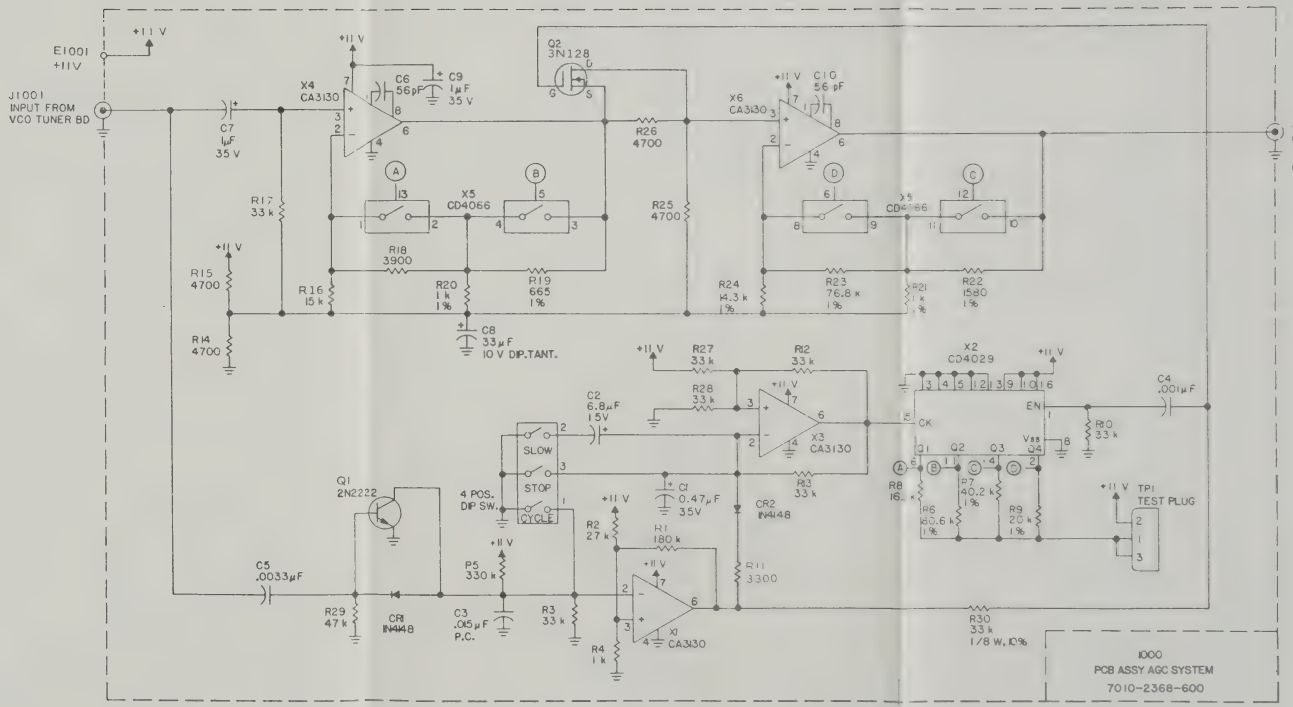

Figure 6-8. AGC system A1A3A3, schematic diagram.

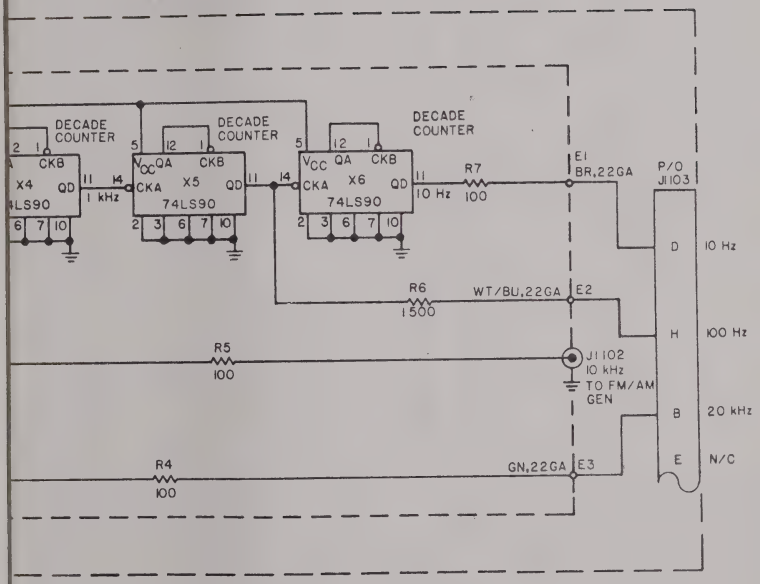

Figure 6-9. Clock divider A1A3A4, schematic diagram.

1. LAST REF NO. USED:
   A1A3A4C1
   A1A3A4FL1
   A1A3A4J3
   A1A3A4A1C2
   A1A3A4A1E4
   A1A3A4A1Q1
   A1A3A4A1R7
   A1A3A4A1X6
2. ALL RESISTORS ARE 1/4W, 10% UNLESS OTHERWISE NOTED.
3. ALL RESISTANCE IS EXPRESSED IN OHMS UNLESS OTHERWISE NOTED.
4. ALL REF NO'S CARRY AN ASSIGNED DESIGNATOR SERIES (e.g. THIS SCHEMATIC CARRIES SERIES A1A3A4 AND A1A3A4A1: THEREFORE R1 IS DESIGNATED A1A3A4A1R1).

DRAFTSMANS NOTES:

J1101 ON SHT 1 BECOMES	A1A3A4J1
J1102	A1A3A4J2
J1103	A1A3A4J3
FL1101	A1A3A4FL1

A1A3A4A1
CLOCK DIVIDER
P.C. BD. ASSY.
7010-2309-300

A1A3A4
MECH ASSY
CLOCK DIVIDER
7026-2321-700

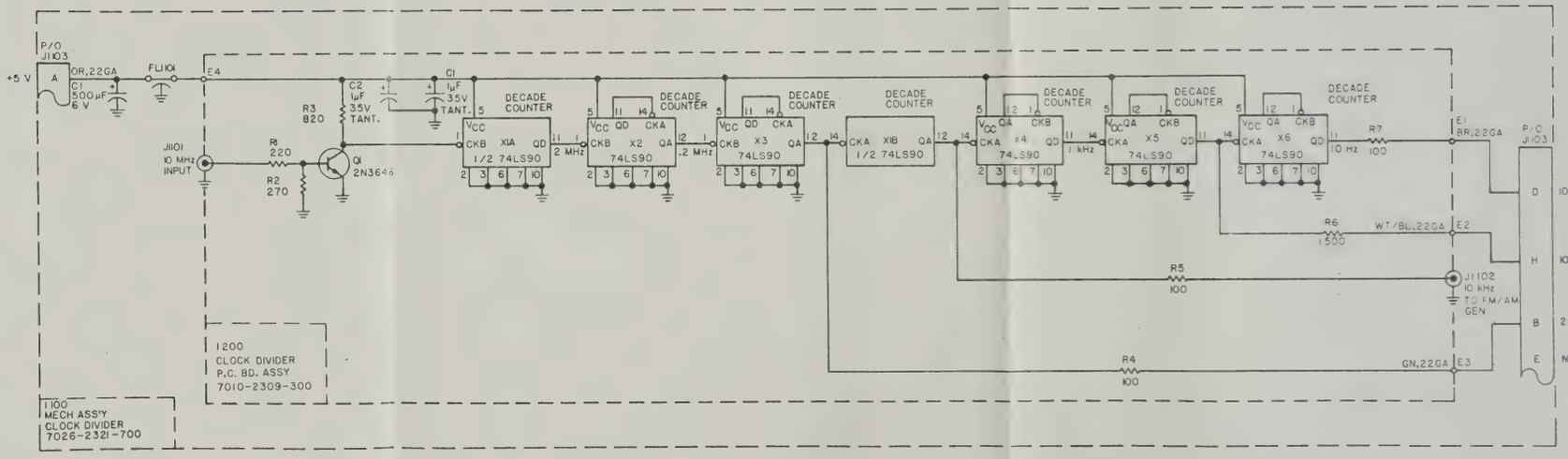

Figure 6-9. Clock divider A1A3A4, schematic diagram.

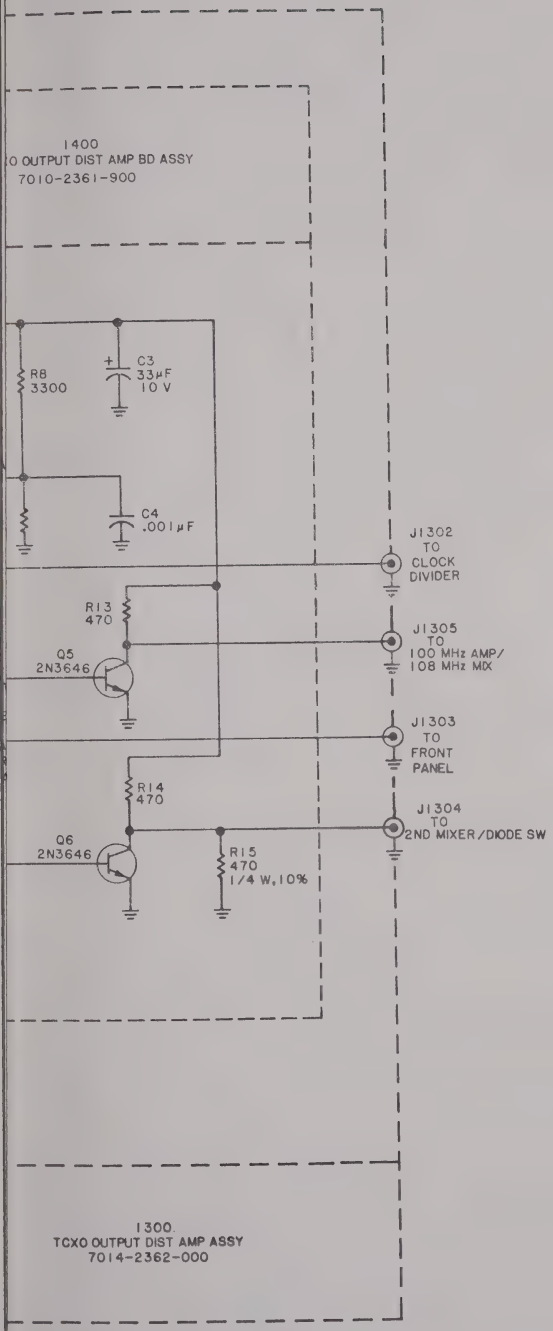

Figure 6-10. TCXO output distribution amplifier A1A3A5, schematic diagram.

AIA3A5
TCXO OUTPUT DIST ASSY
7014-2362-000

AIA3A5AI
TCXO OUTPUT DIST
AMP P.C. BD. ASSY
7010-2361-900

DRAFTSMAN NOTES:

ON SHT 1 J1301 BECOMES AIA3A5J1
J1302 AIA3A5J2
J1303 AIA3A5J3
J1304 AIA3A5J4
J1305 AIA3A5J5
FL1301 AIA3A5FL1

NOTES:

1. LAST REF NO USED:
AIA3A5FL1
J5
AIA3A5AIC4
E1
L1
Q6
R15

2. ALL RESISTORS ARE 1/8 W, 10% UNLESS OTHERWISE NOTED.

3. ALL RESISTANCE IS EXPRESSED IN OHMS UNLESS OTHERWISE NOTED.

4. ALL REF NO'S CARRY AN ASSIGNED DESIGNATOR SERIES (e.g. THIS SCHEMATIC CARRIES SERIES AIA3A5 & AIA3A5AI; THEREFORE, R1 IS DESIGNATED AIA3A5AIR1).

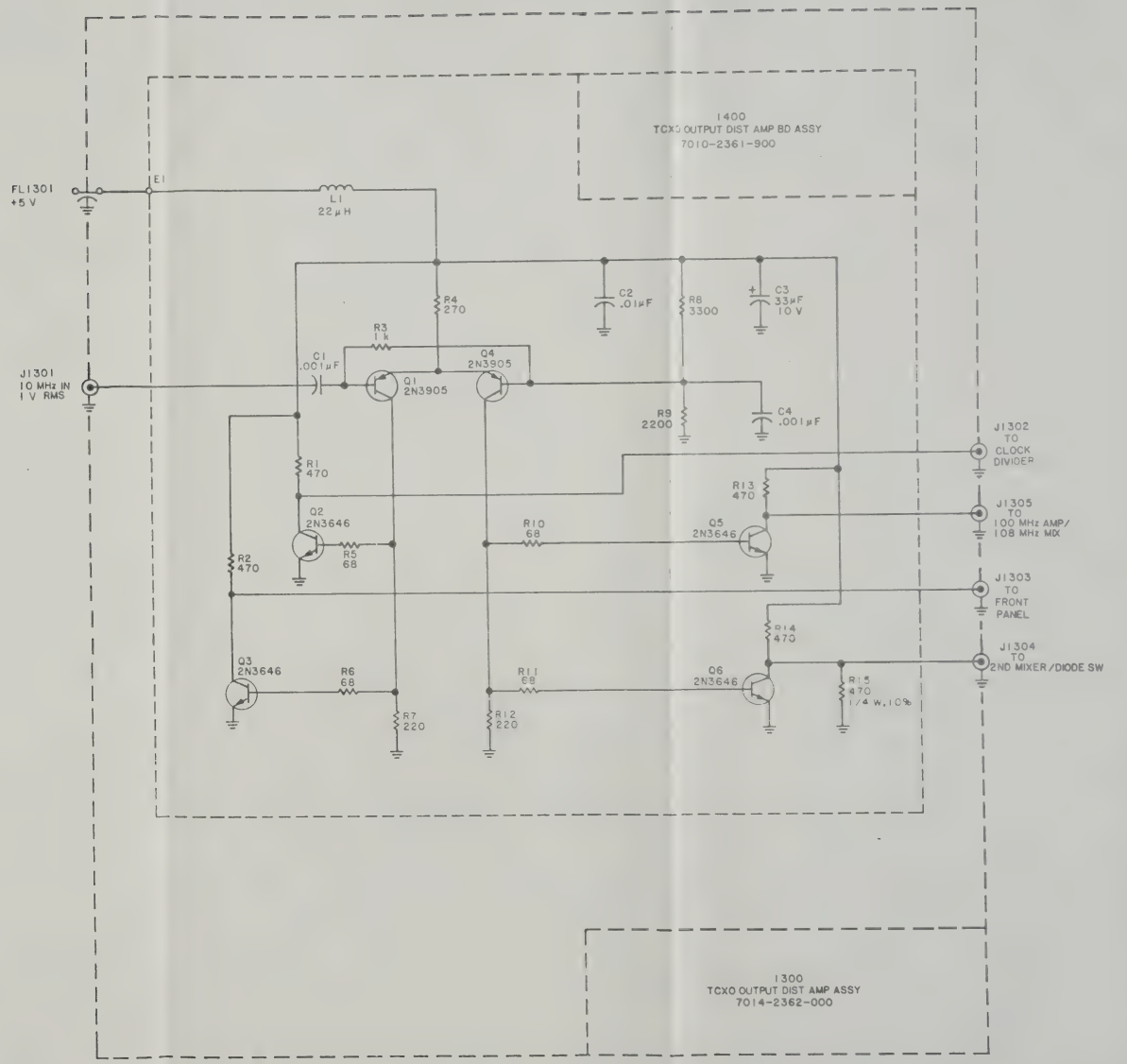

Figure 6-10. TCXO output distribution amplifier A1A3A5, schematic diagram.

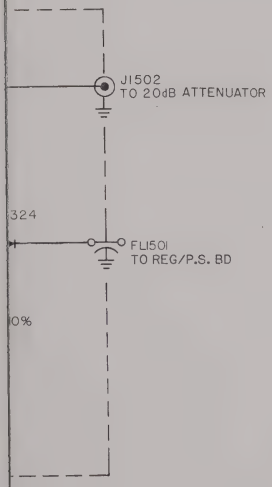

Figure 6-11. Transmitter sensor A1A4, schematic diagram.

DRAFTSMAN NOTES:

J1501 BECOMES	A1A4J1
J1502	A1A4J2
FL1501	A1A4FL1

NOTES:
1. LAST REF NO. USED:
A1A4CR1
FL1
G1
J2
R2
2. ALL REF NO'S CARRY AN ASSIGNED DESIGNATOR SERIES (e.g. THIS SCHEMATIC CARRIES SERIES A1A4 THEREFORE R1 IS DESIGNATED A1A4R1).

A1A4
MECH ASSY, XMTR SENSOR
7005-2374-000

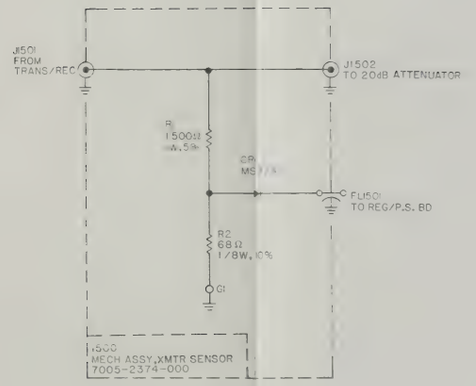

Figure 6-11. Transmitter sensor A1A4, schematic diagram.

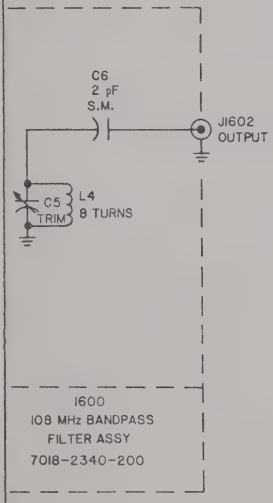

Figure 6-12. 108 MHz bandpass filter A1A5, schematic diagram.

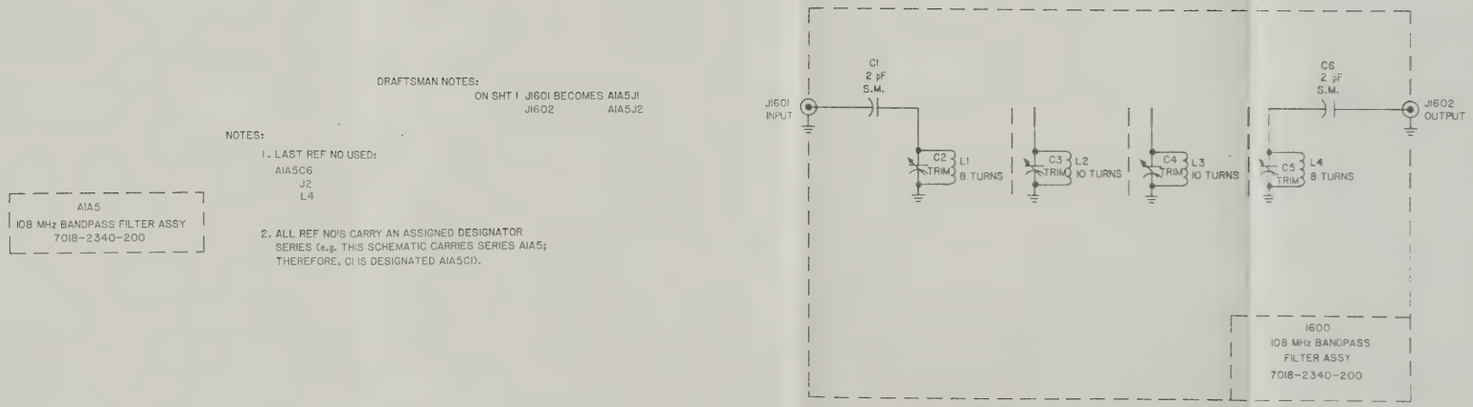

DRAFTSMAN NOTES:
ON SHT 1 J1601 BECOMES A1A5J1
J1602 A1A5J2

NOTES:
1. LAST REF NO USED:
A1A5C6
J2
L4

2. ALL REF NO'S CARRY AN ASSIGNED DESIGNATOR SERIES (e.g. THIS SCHEMATIC CARRIES SERIES A1A5; THEREFORE, C1 IS DESIGNATED A1A5C1).

A1A5
108 MHz BANDPASS FILTER ASSY
7018-2340-200

Figure 6-12. 108 MHz bandpass filter A1A5, schematic diagram.

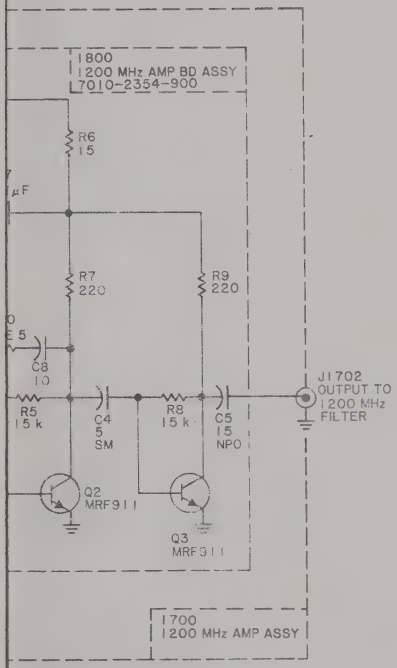

Figure 6-13. 1200 MHz amplifier A1A6, schematic diagram.

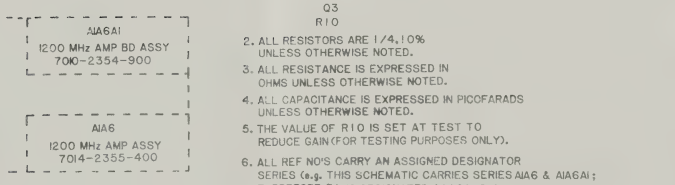

NOTES:

1. LAST REF NO USED:
   A1A6FL1
   J2
   C1
   A1A6A1CB
   E1
   G1
   Q3
   R10
2. ALL RESISTORS ARE 1/4, 10% UNLESS OTHERWISE NOTED.
3. ALL RESISTANCE IS EXPRESSED IN OHMS UNLESS OTHERWISE NOTED.
4. ALL CAPACITANCE IS EXPRESSED IN PICOFARADS UNLESS OTHERWISE NOTED.
5. THE VALUE OF R10 IS SET AT TEST TO REDUCE GAIN (FOR TESTING PURPOSES ONLY).
6. ALL REF NO'S CARRY AN ASSIGNED DESIGNATOR SERIES (e.g. THIS SCHEMATIC CARRIES SERIES A1A6 & A1A6A1; THEREFORE, R1 IS DESIGNATED A1A6A1R1).

DRAFTSMAN NOTES:

J1701 = A1A6J1
J1702 = A1A6J2
FL1701 = A1A6FL1

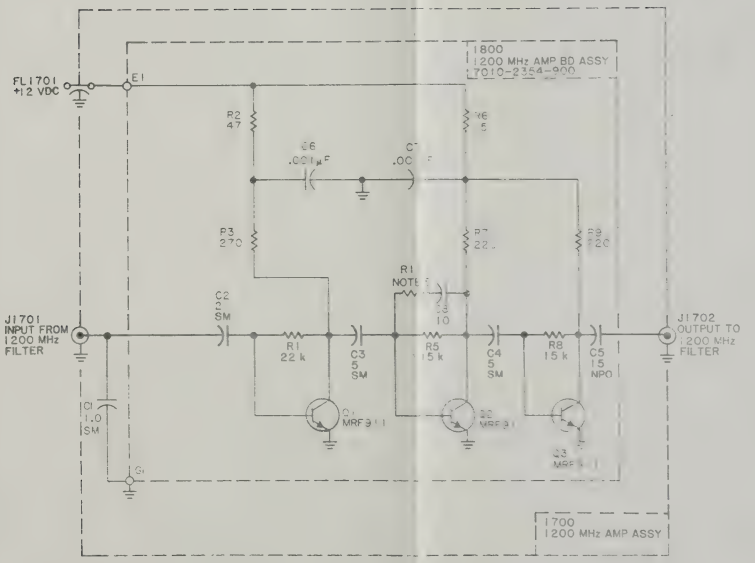

Figure 6-13. 1200 MHz amplifier A1A6, schematic diagram.

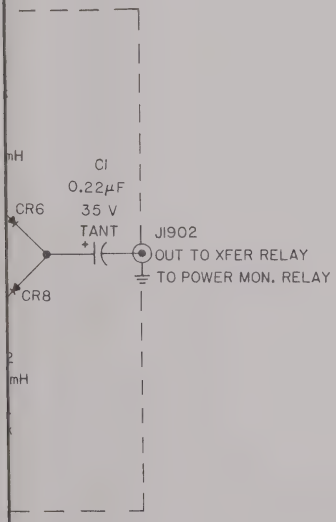

Figure 6-14. Static discharge protector A1A7, schematic diagram.

DRAFTSMAN NOTES:

ON SH 1 J1901 BECOMES A1A7J1
J1902 A1A7J2
FL1901 A1A7FL1

NOTES:

1. LAST REF NO USED:
   A1A7C2
   A1A7CR8
   A1A7FL1
   A1A7J2
   A1A7L2
   A1A7R4
2. ALL RESISTORS ARE 1/4 W, 10%.
3. ALL RESISTANCE IS EXPRESSED IN OHMS UNLESS OTHERWISE NOTED.
4. ALL DIODES ARE MA-47047.
5. ALL REF NO'S CARRY AN ASSIGNED DESIGNATOR SERIES (e.g. THIS SCHEMATIC CARRIES SERIES A1A7; THEREFORE, R1 IS DESIGNATED A1A7R1).

A1A7
MECH ASSY
STATIC DIS PROTECT
7022-2360-200

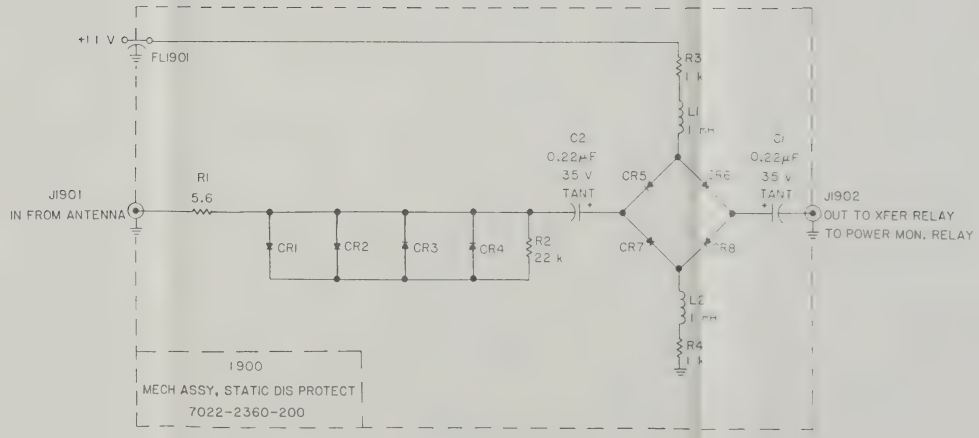

Figure 6-14. Static discharge protector A1A7, schematic diagram.

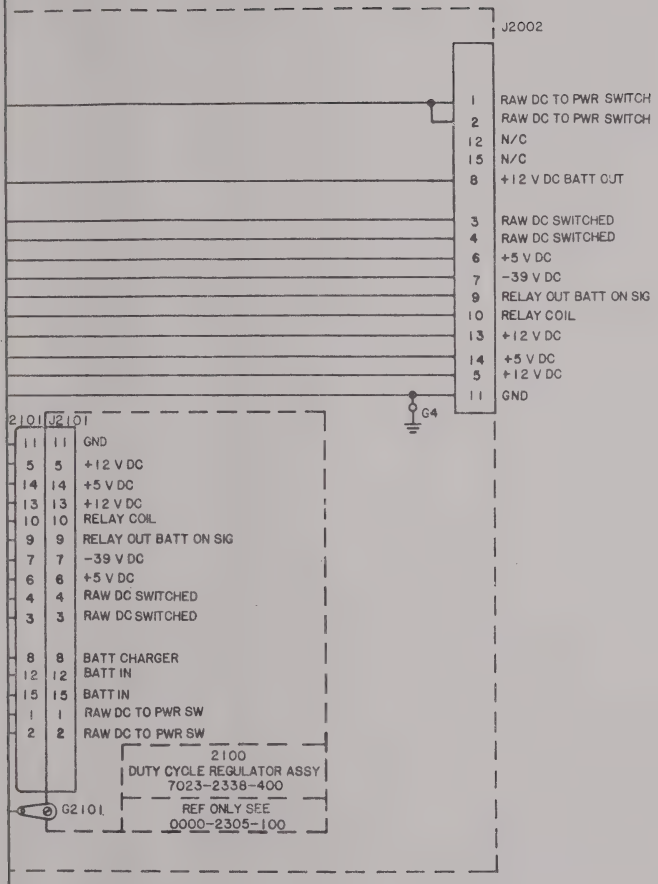

Figure 6-15. Rear panel assembly A1A8, schematic diagram.

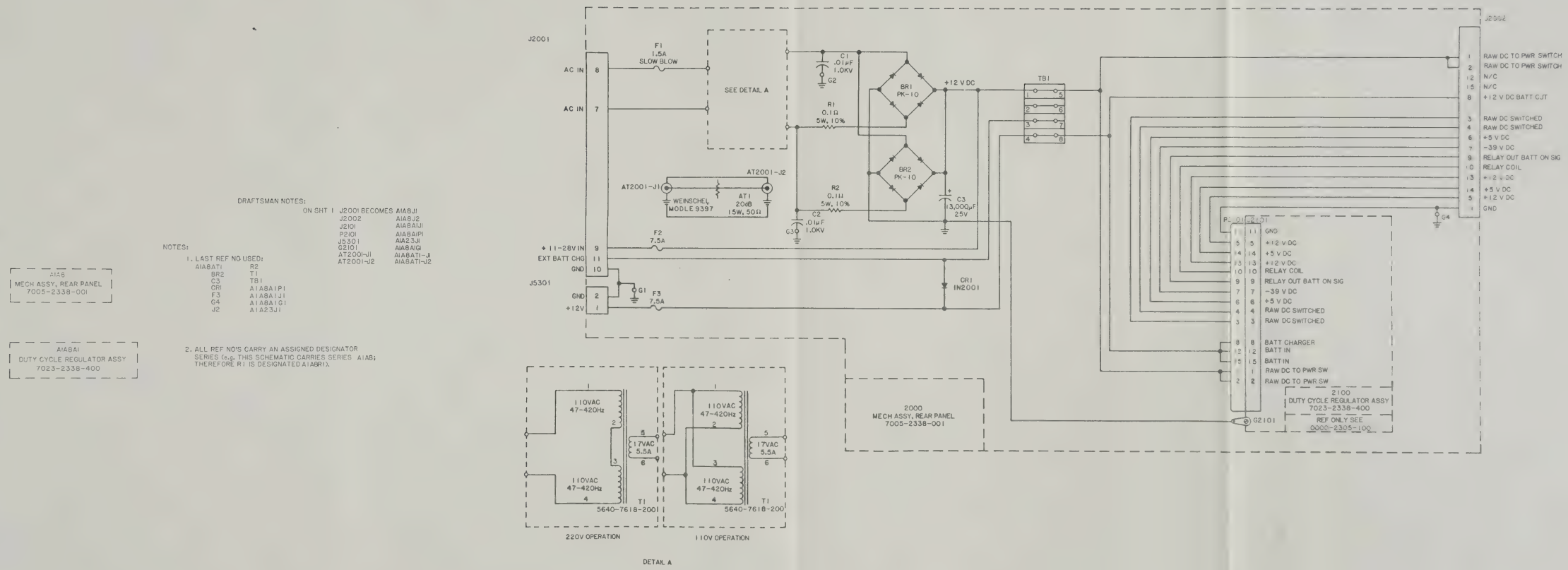

Figure 6-15. Rear panel assembly A1A8, schematic diagram.

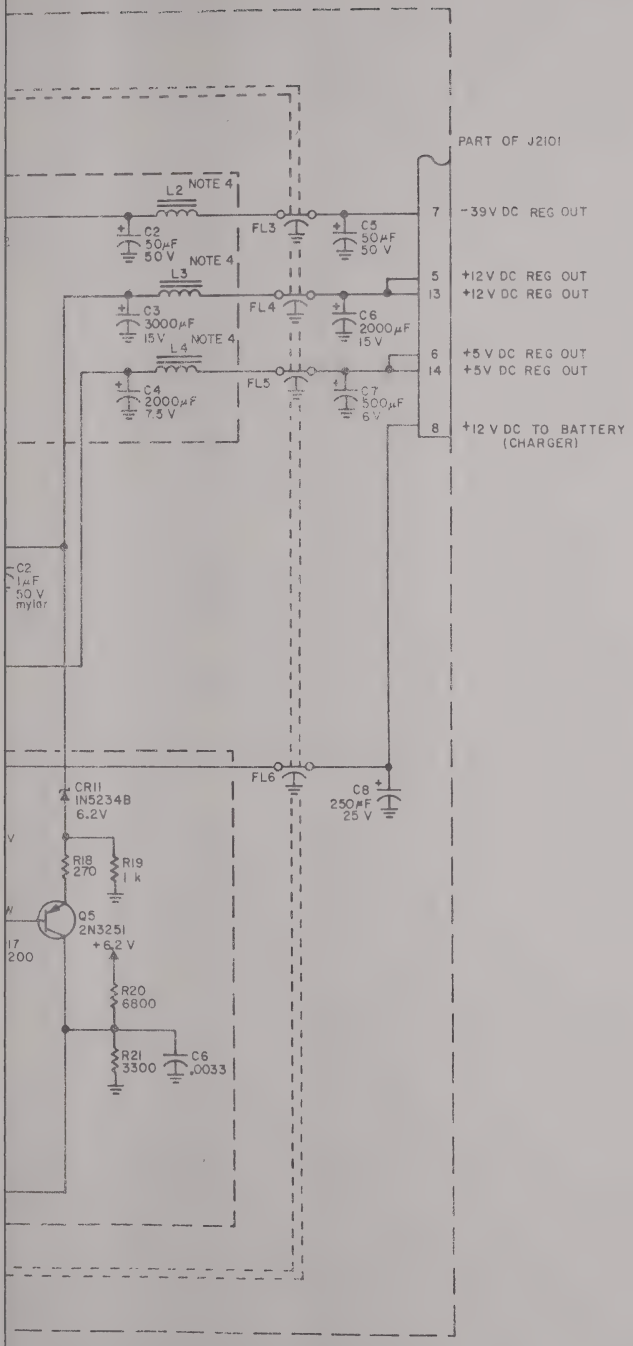

Figure 6-16. Duty cycle regulator A1A8A1, schematic diagram.

NOTES:

1. LAST REF NO USED:
   - A1A8A1C8
   - CR6
   - FL6
   - J1
   - K1
   - P3
   - Q4
   - R1
   - A1A8A1A1C4
   - CR1
   - L4
   - T1
   - A1A8A1A1A1C6
   - CR12
   - Q8
   - R24
   - X2302
2. ALL RESISTORS ARE 1/4 W, 10% UNLESS OTHERWISE NOTED.
3. ALL RESISTANCE IS EXPRESSED IN OHMS UNLESS OTHERWISE NOTED.
4. L1, L2, L3 & L4 ARE 28 TURNS OF 17GA WIRE ON "MAGNETICS" 55930-A2 CORE.
5. R3 IS:
   - 470, 1/4 W FOR SN801 THRU SN1390.
   - 560, 1/2 W FOR SN1391 AND ON.
6. ALL REF NOS CARRY AN ASSIGNED DESIGNATOR SERIES (e.g. THIS SCHEMATIC CARRIES SERIES A1A8A1, A1A8A1A1 & A1A8A1A1A1; THEREFORE, T1 IS DESIGNATED A1A8A1A1T1).

DRAFTSMAN NOTES:

ON SHT 1 J2101 BECOMES A1A8A1J1
G2101 A1A8A1J2

A1A8A1A1
DUTY CYCLE REGULATOR ASSY
7023-2338-400

A1A8A1A1A1
DUTY CYCLE REG. P.C. BD. ASSY
7010-2309-300

A1A8A1A1
TOROID MTG. P.C. BD. ASSY
7010-2334-900

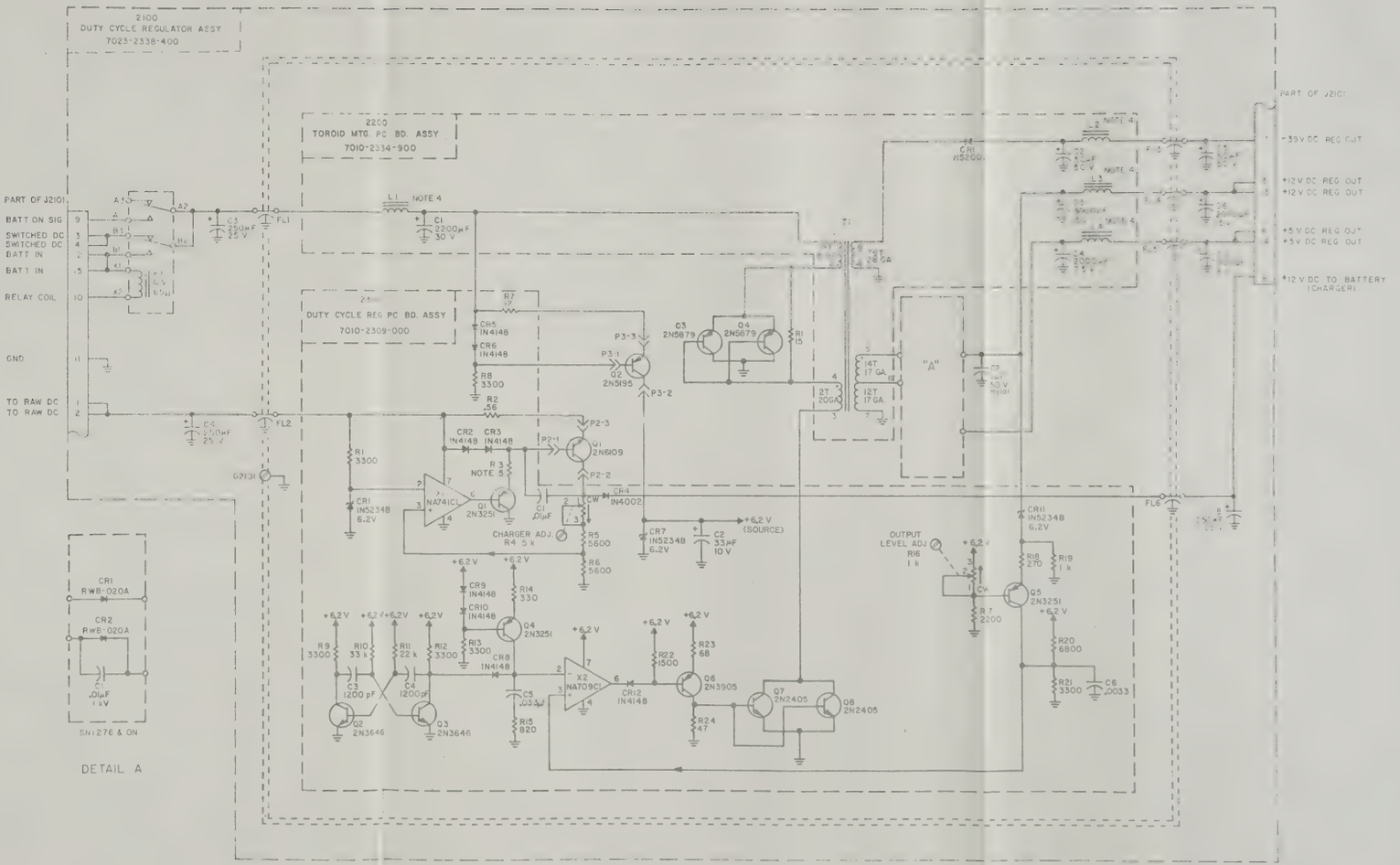

Figure 6-16. Duty cycle regulator A1A8A1, schematic diagram.

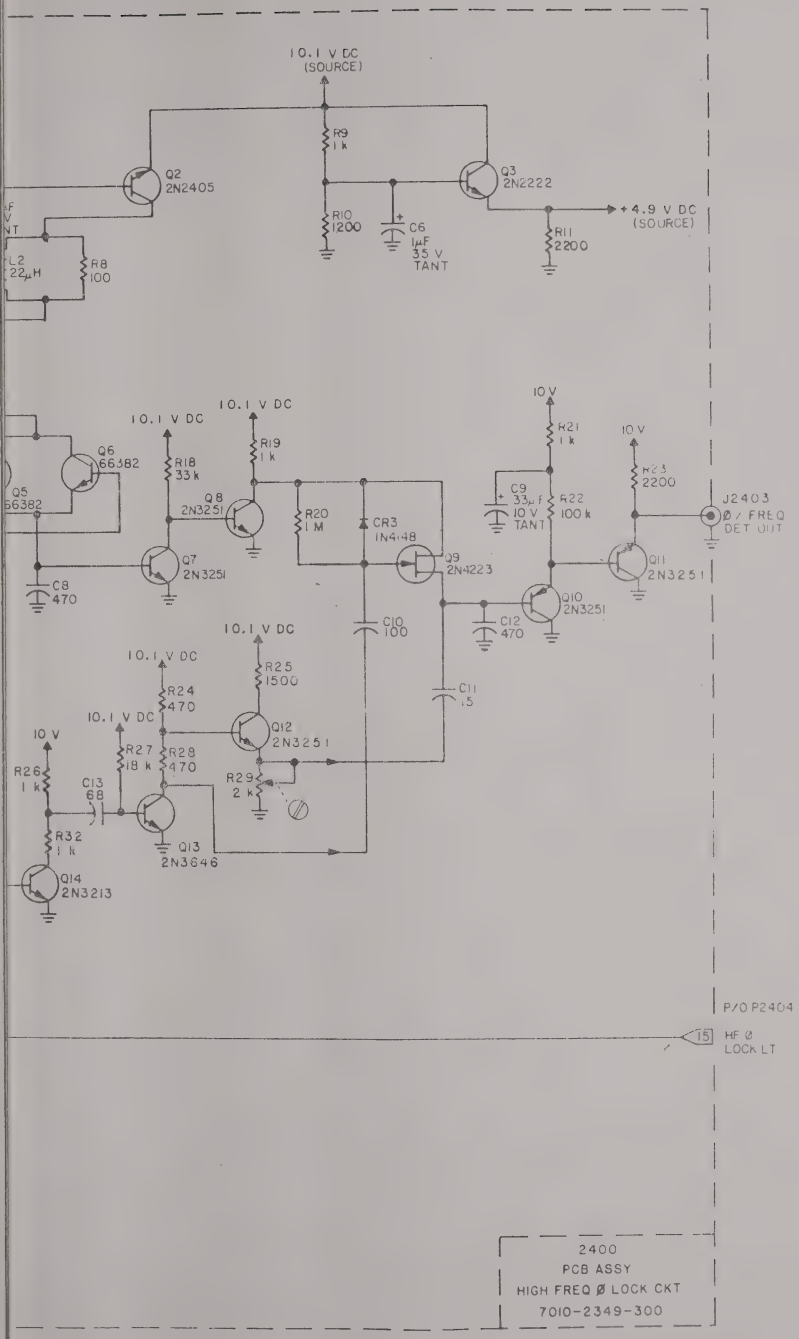

Figure 6-17. High frequency phase lock A1A9, schematic diagram.

NOTES:

1. LAST REF NO USED:
   A1A9C20
   A1A9CR6
   A1A9L4
   A1A9Q16
   A1A9R39
   A1A9X12

DRAFTSMAN NOTES:

ON SHT 1 J2401 BECOMES A1A9J1

J2402	A1A9J2
J2403	A1A9J3
P2404	A1A9P4

2. ALL RESISTORS ARE 1/8 W, 10% UNLESS OTHERWISE NOTED.

3. ALL RESISTANCE IS EXPRESSED IN OHMS UNLESS OTHERWISE NOTED.

4. ALL CAPACITANCE IS EXPRESSED IN PICOFARADS UNLESS OTHERWISE NOTED.

5. ALL REF NO'S CARRY AN ASSIGNED DESIGNATOR SERIES (e.g. THIS SCHEMATIC CARRIES SERIES A1A9; THEREFORE, R1 IS DESIGNATED A1A9R1).

A1A9
PCB
HIGH FREQ Ø LOCK
7010-2349-300

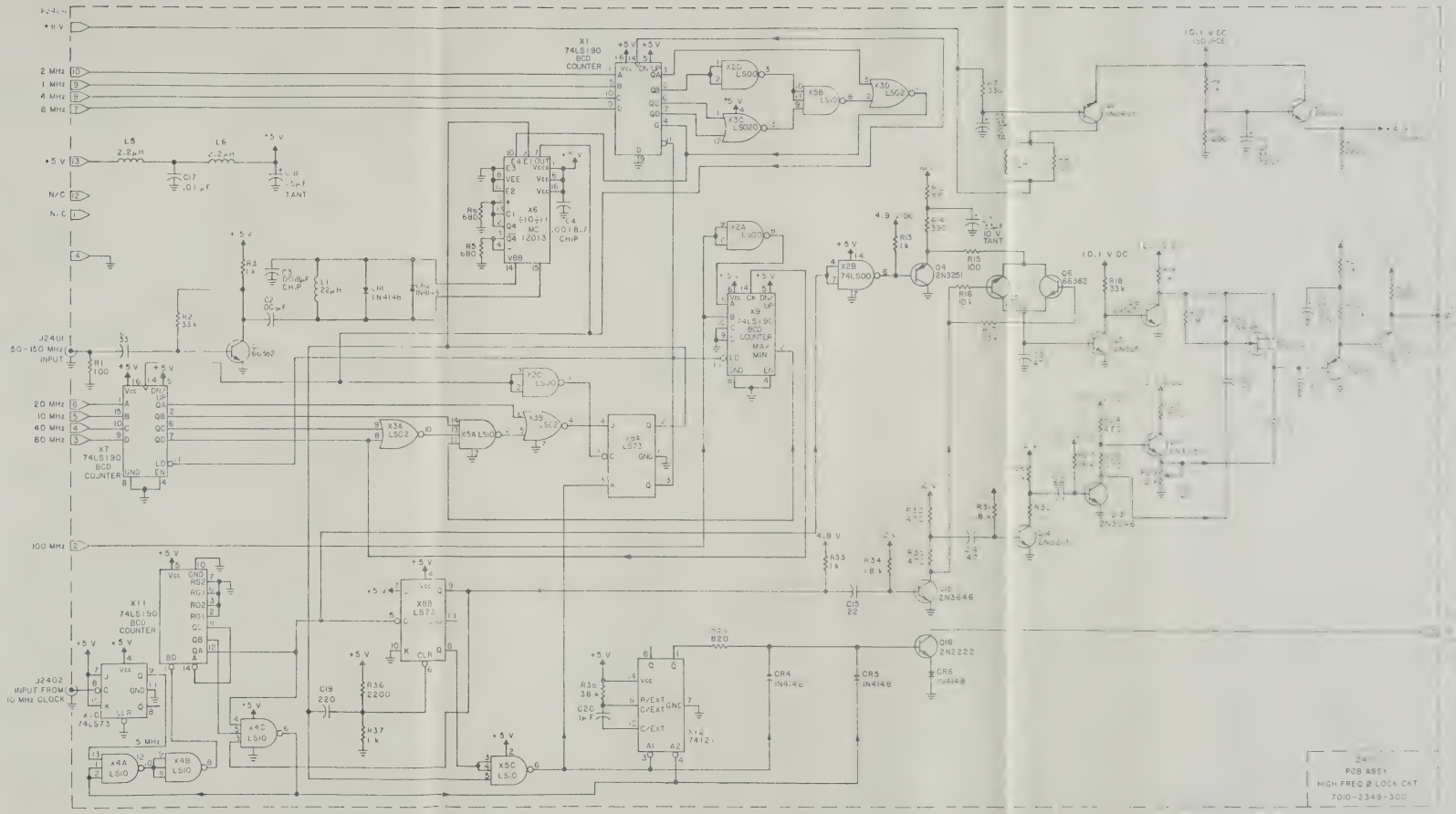

Figure 6-17. High frequency phase lock A1A9, schematic diagram.

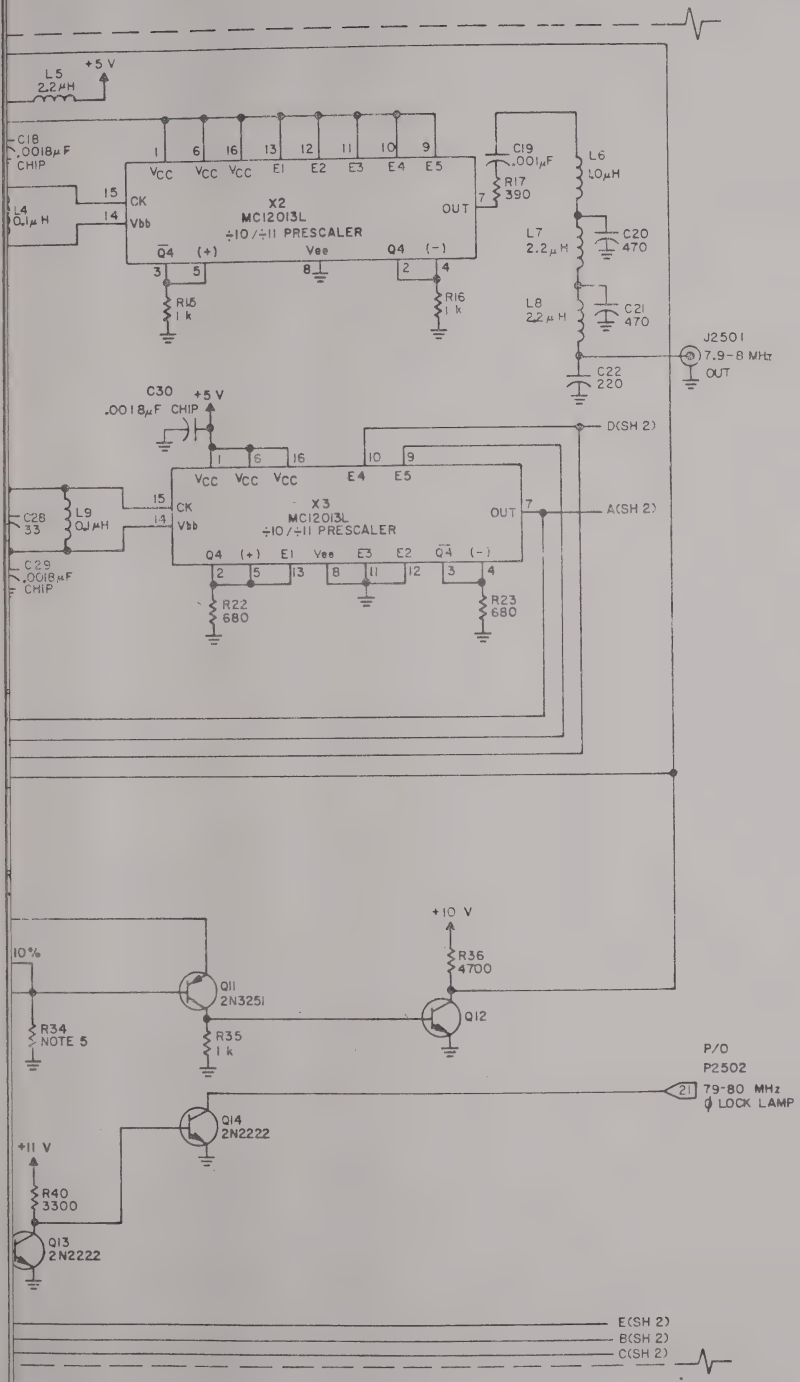

Figure 6-18. 79-80-MHz loop A1A10, schematic diagram (sheet 1 of 2).

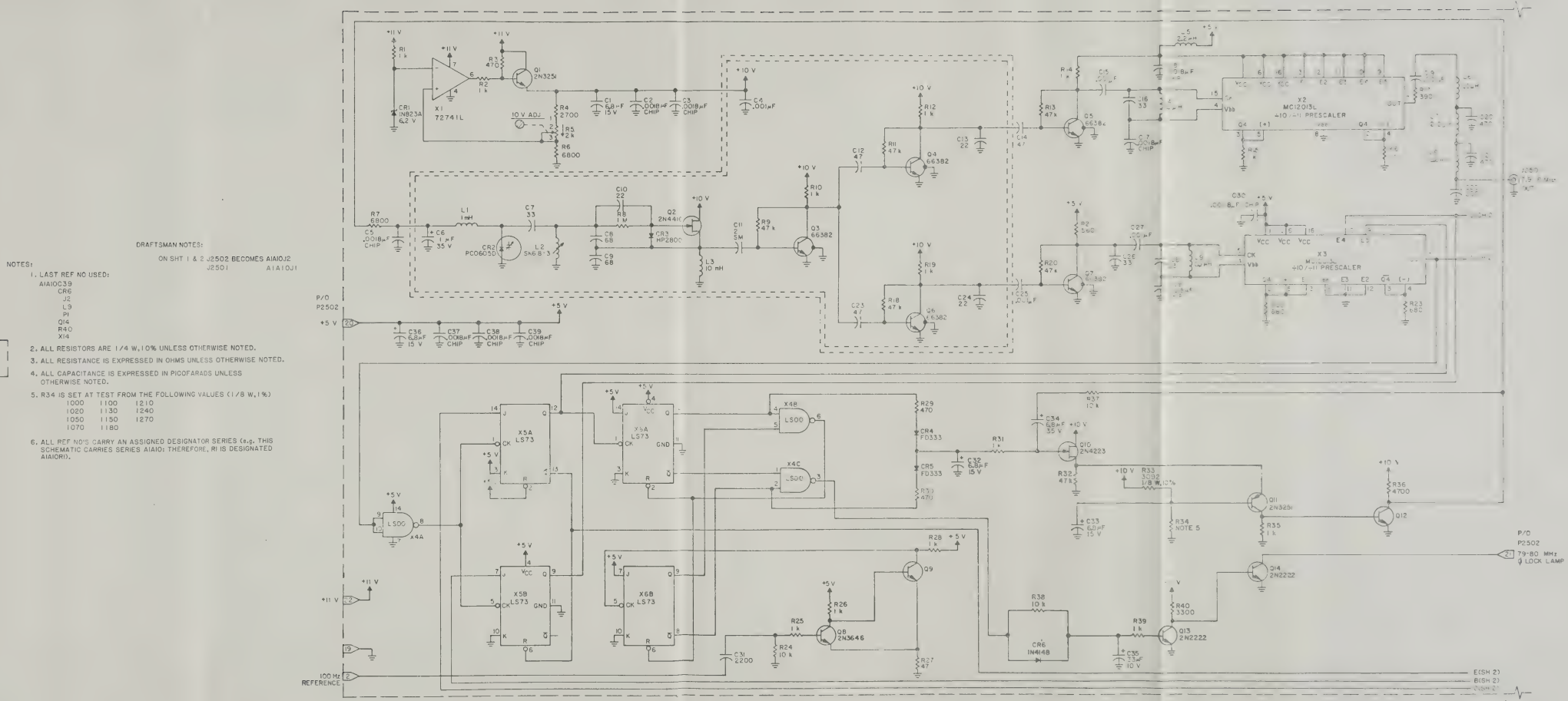

Figure 6-18. 79-80-MHz loop A1A10, schematic diagram (sheet 1 of 2).

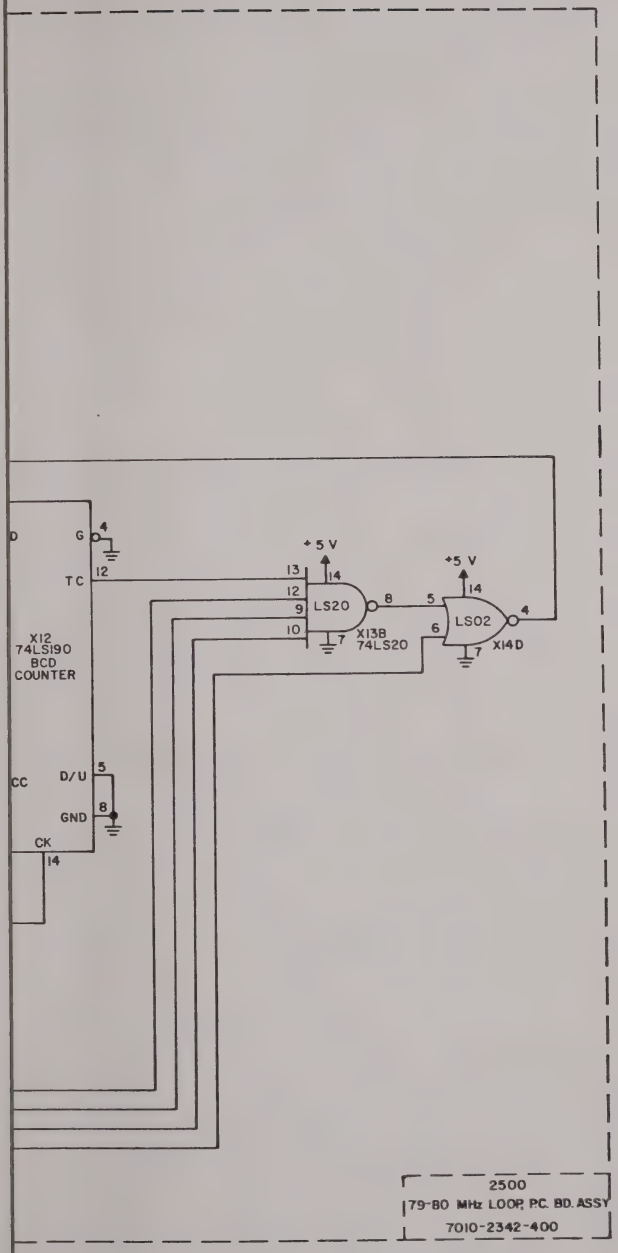

Figure 6-18. 79-80 MHz loop A1A10, schematic diagram (sheet 2 of 2).

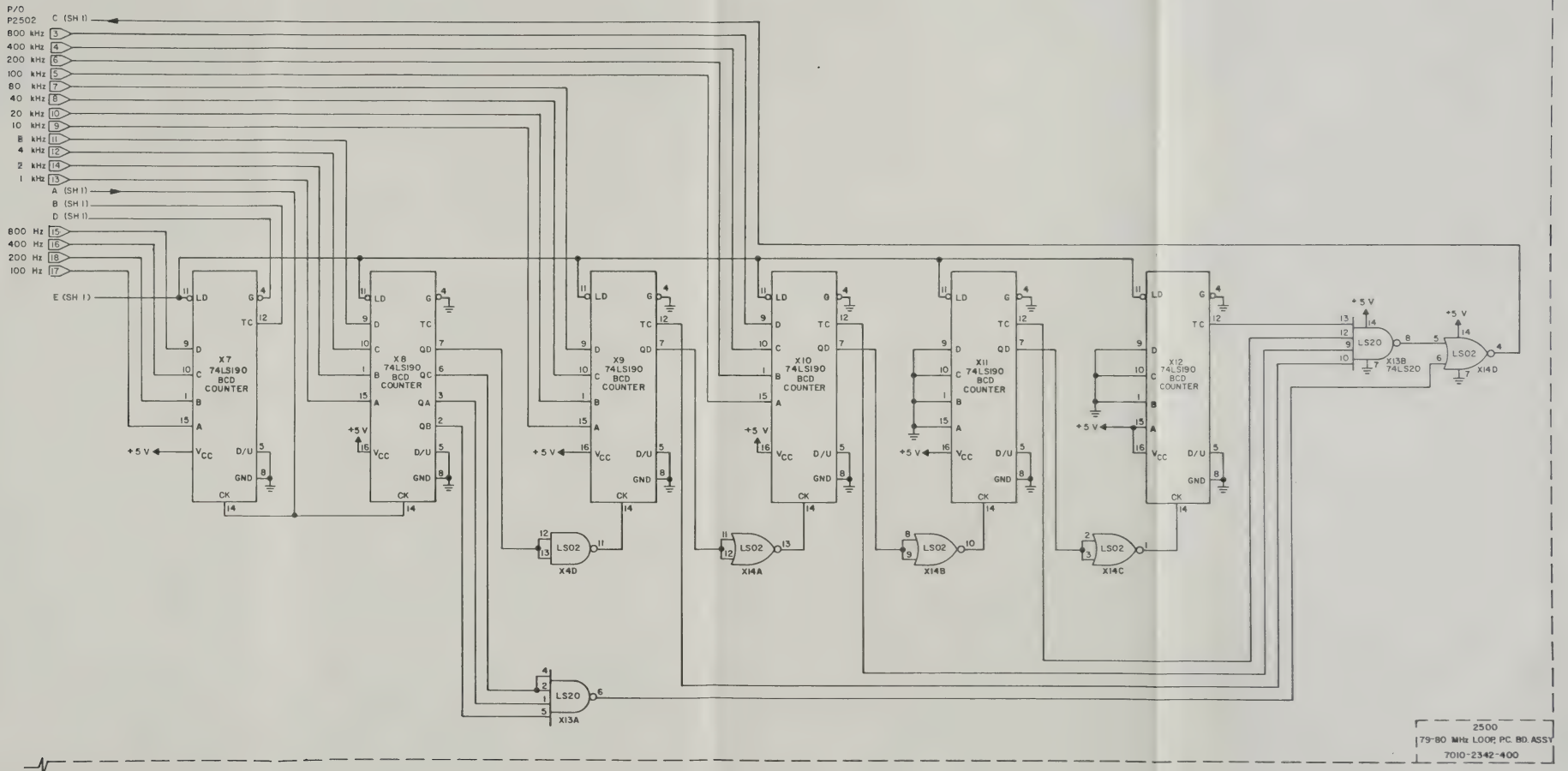

Figure 6-18. 79-80 MHz loop A1A10, schematic diagram (sheet 2 of 2).

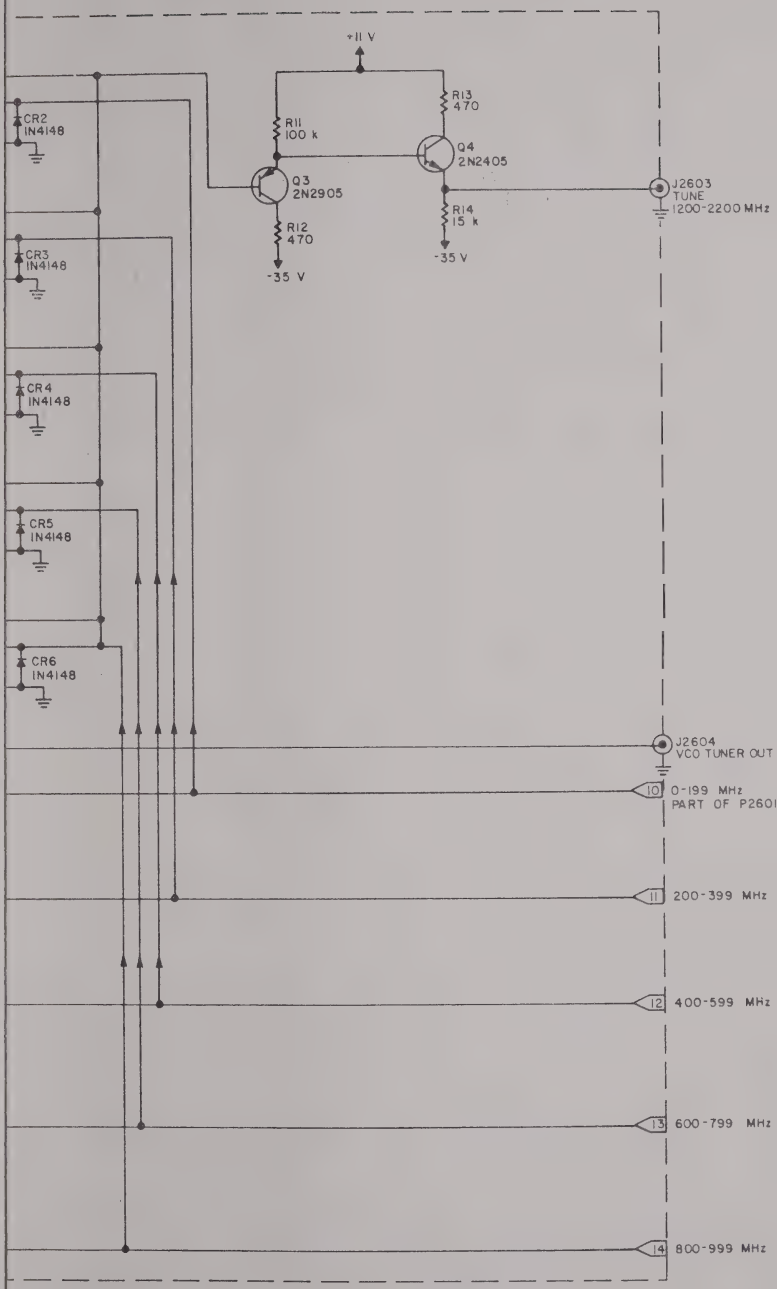

Figure 6-19. VCO tuner A1A11, schematic diagram.

NOTES:

1. LAST REF NO USED:
   A1A11C4
   A1A11CR6
   A1A11J4
   A1A11P1
   A1A11Q11
   A1A11R53
   A1A11TP1
   A1A11X1

2. ALL RESISTORS ARE 1/8 W, 10% UNLESS OTHERWISE NOTED.

3. ALL RESISTANCE IS EXPRESSED IN OHMS UNLESS OTHERWISE NOTED.

4. ALL CAPACITANCE IS EXPRESSED IN PICOFARADS UNLESS OTHERWISE NOTED.

5. ALL REF NO'S CARRY AN ASSIGNED DESIGNATOR SERIES (e.g. THIS SCHEMATIC CARRIES SERIES A1A11: THEREFORE R1 IS DESIGNATED A1A11R1).

DRAFTSMAN NOTES:
ON SHT 1 J2602 BECOMES A1A11J2
J2603 A1A11J3
J2604 A1A11J4
P2601 A1A11P1

A1A11
PCB ASSY
VCO TUNER
7010-2342-300

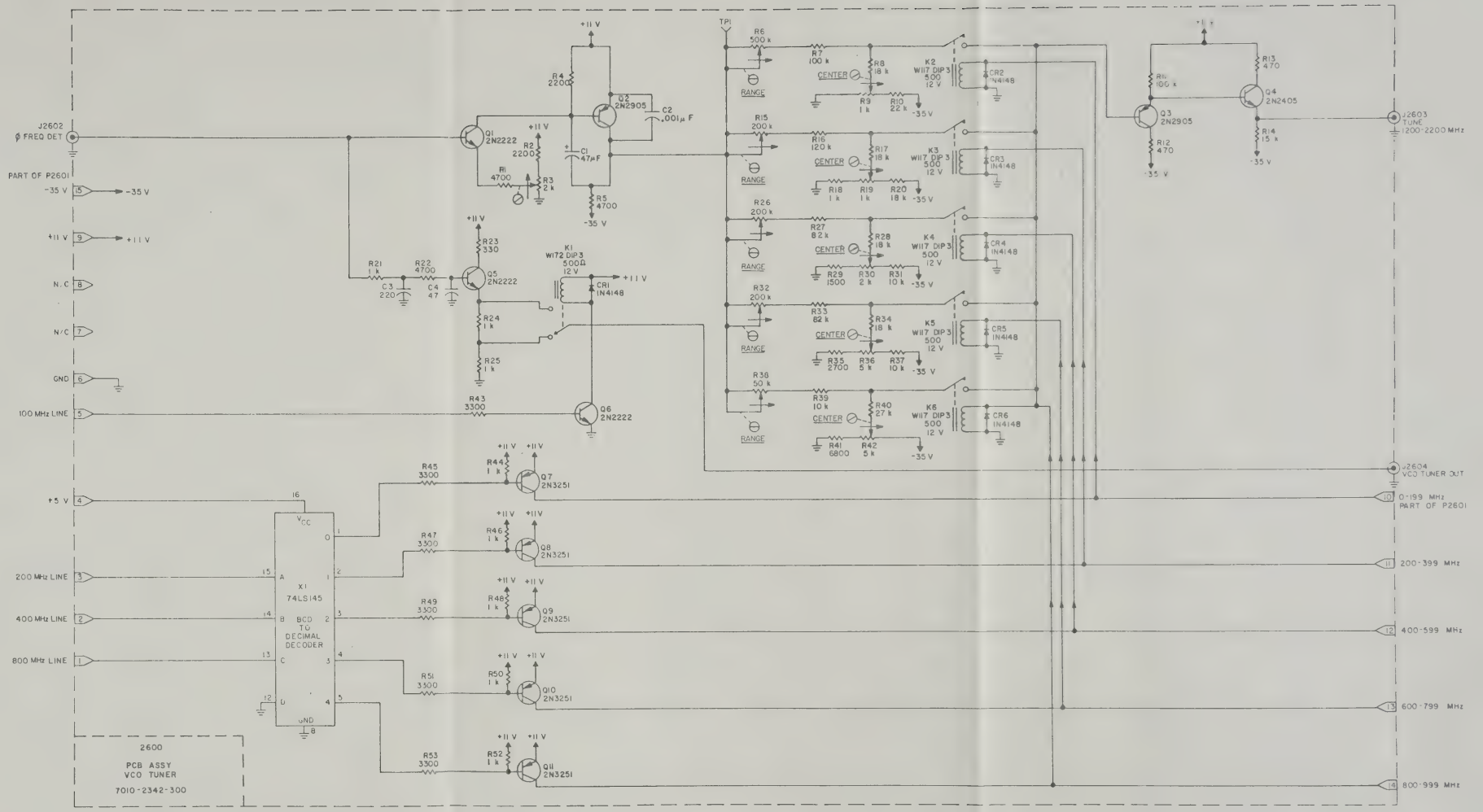

Figure 6-19. VCO tuner A1A11, schematic diagram.

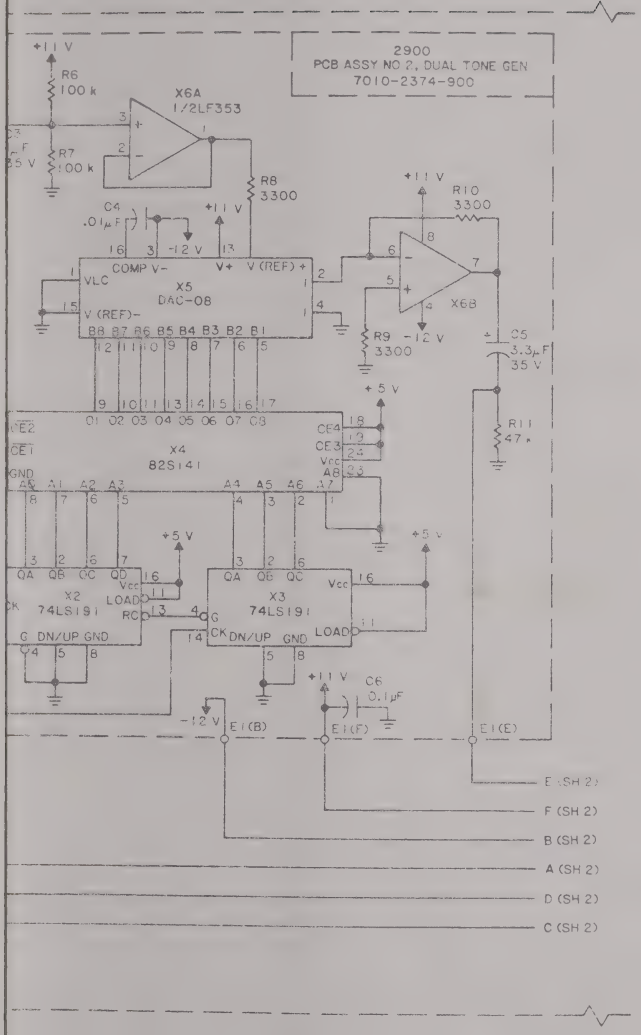

Figure 6-20. Dual tone generator A1A12, schematic diagram (sheet 1 of 2).

NOTES:

1. LAST REF. NO. USED:
   A1A12E1
   J1
   R1
   SW5
   A1A12A1C1
   CR4
   E2
   X8
   A1A12A2C9
   E2
   L1
   Q2
   R11
   X6
   Y1
   A1A12A3C5
   CR
   E1
   Q1
   R25
   X5
2. ALL RESISTORS ARE 1/8 W, 10% UNLESS OTHERWISE NOTED.
3. ALL RESISTANCE IS EXPRESSED IN OHMS UNLESS OTHERWISE NOTED.
4. ALL POLARIZED CAPACITORS ARE TANTALUM.
5. A1A12A2C2 IS SELECTED AT TEST FROM THE FOLLOWING VALUES: 22 pF (NOMINAL) 27 pF
6. ALL REF. NO'S CARRY AN ASSIGNED DESIGNATOR SERIES (e.g., THIS DRAWING CARRIES A1A12, A1A12A1, A1A12A2, & A1A12A3; THEREFORE Y1 IS DESIGNATED A1A12A2Y1).

DRAFTSMAN NOTES:

ON SHT 2 J2701 BECOMES A1A12J1

A1A12
MECH ASSY, DUAL TONE GENERATOR
7006-2375-300

A1A12A1
PCB ASSY NO.1, DUAL TONE GENERATOR
7010-2374-600

A1A12A2
PCB ASSY NO.2, DUAL TONE GENERATOR
7010-2374-900

A1A12A3
PCB ASSY NO.3, DUAL TONE GENERATOR
7010-2375-200

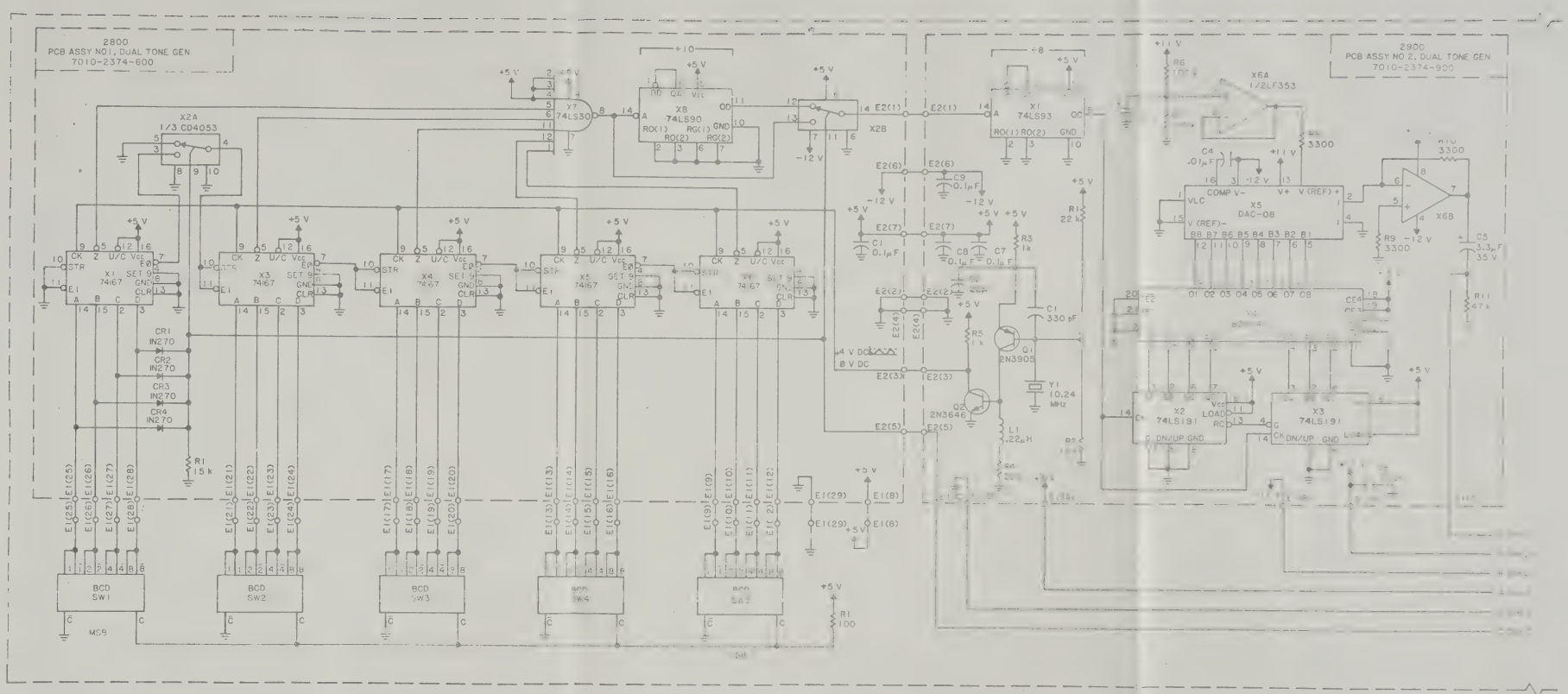

Figure 6-20. Dual tone generator A1A12, schematic diagram (sheet 1 of 2).

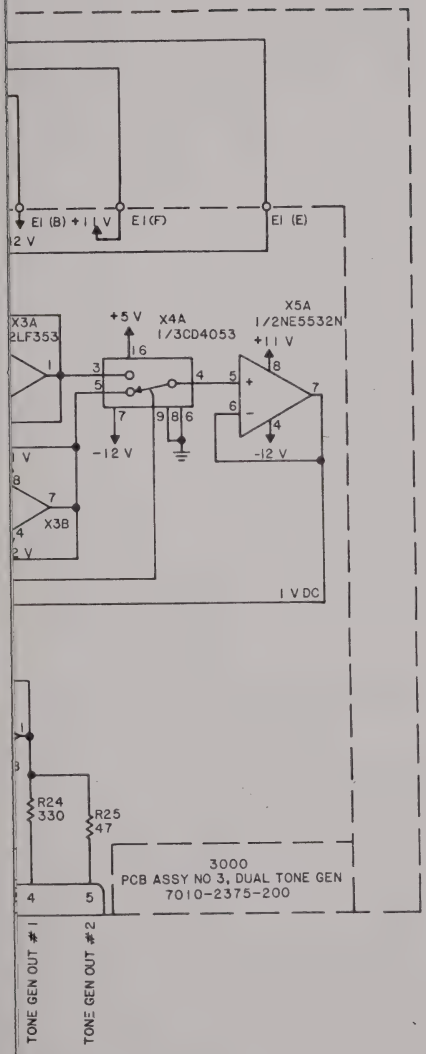

Figure 6-20. Dual tone generator A1A12, schematic diagram (sheet 2 of 2).

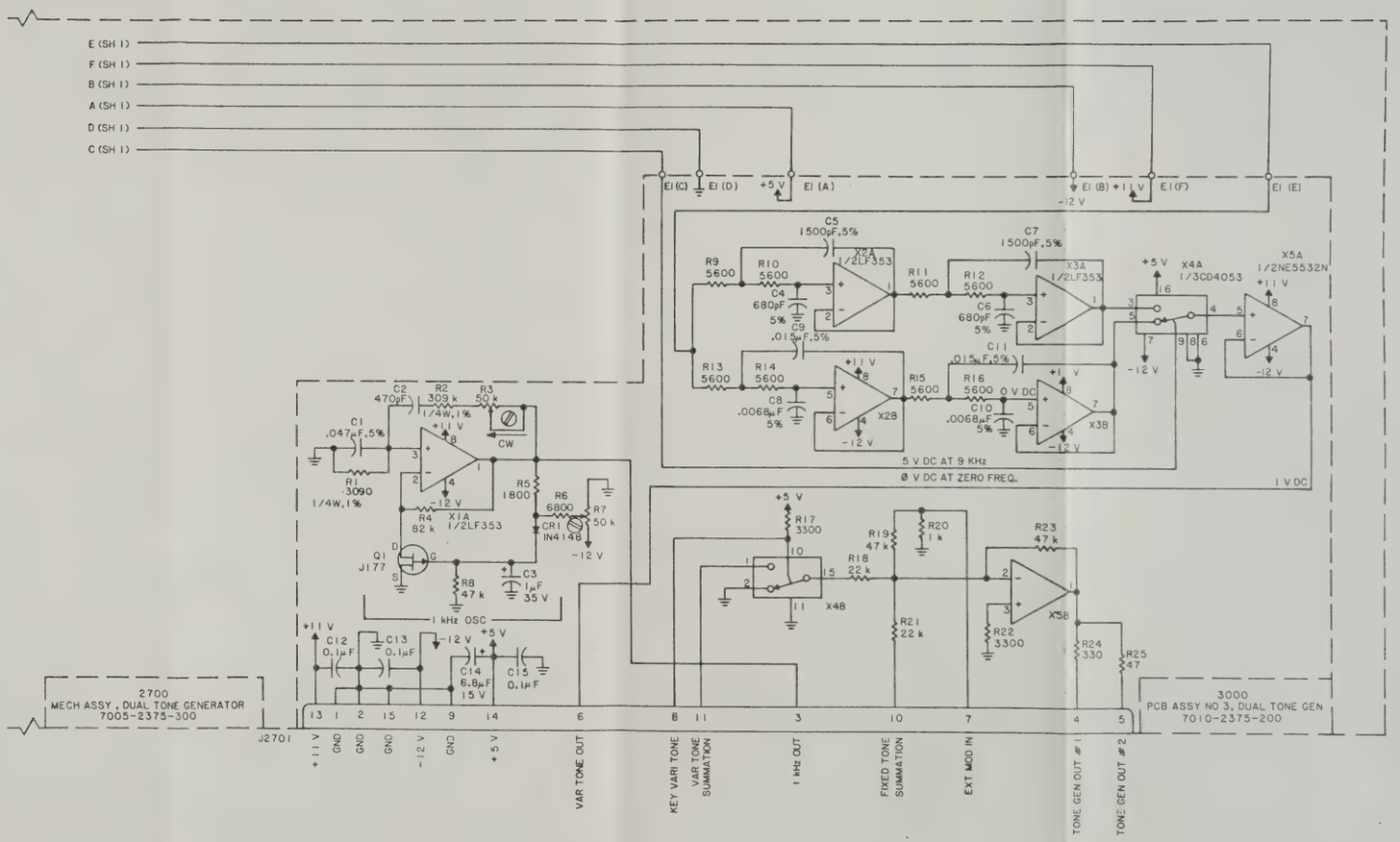

Figure 6-20. Dual tone generator A1A12, schematic diagram (sheet 2 of 2).

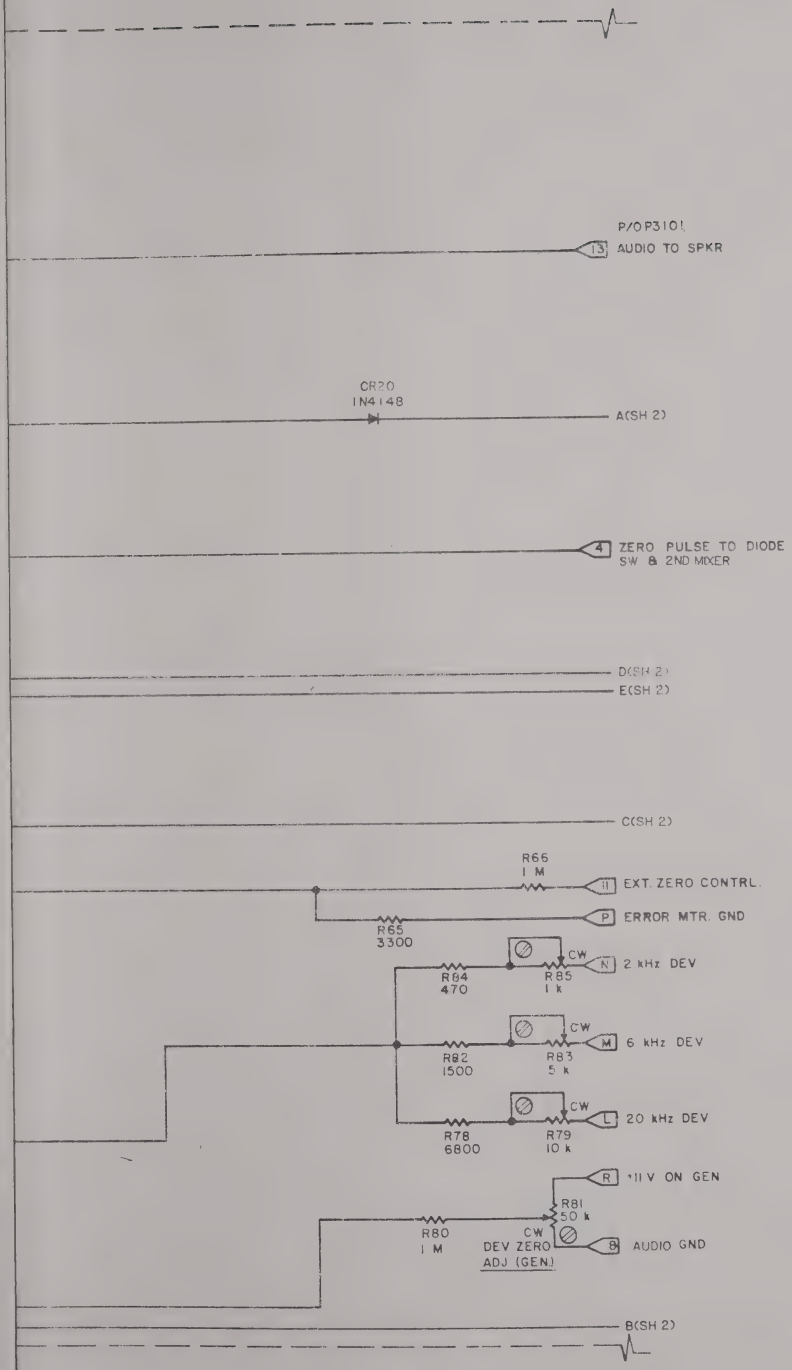

Figure 6-21. 250 kHz i.f. monitor audio A1A13, schematic diagram (sheet 1 of 3).

DRAFTSMAN NOTES:

ON SHTS. 1, 2, & 3 P3101 BECOMES A1A13P1

A1A13
250KHz IF MON
AUDIO P.C. B.D. ASSY

NOTES:

1. LAST REF NO USED:
   A1R149
   C49
   CR10
   Q16
   R179
   XA3
2. ALL RESISTORS ARE ¼ W, 10% UNLESS OTHERWISE NOTED.
3. ALL RESISTANCE IS EXPRESSED IN OHMS UNLESS OTHERWISE NOTED.
4. ALL CAPACITANCE IS EXPRESSED IN PICOFARADS UNLESS OTHERWISE NOTED.
5. R30 IS SET AT TEST FROM THE FOLLOWING VALUES:
   NOMINAL 2320
   RANGE 2100–2470
6. P113 MAY OR MAY NOT BE INSTALLED AS NECESSARY (680Ω TO 10M, 1/8W, 10%).
7. ALL REF NO'S CARRY AN ASSIGNED DESIGNATOR SERIES (e.g. THIS SCHEMATIC CARRIES SERIES A1A13, THEREFORE R179 IS DESIGNATED A1A13R179).

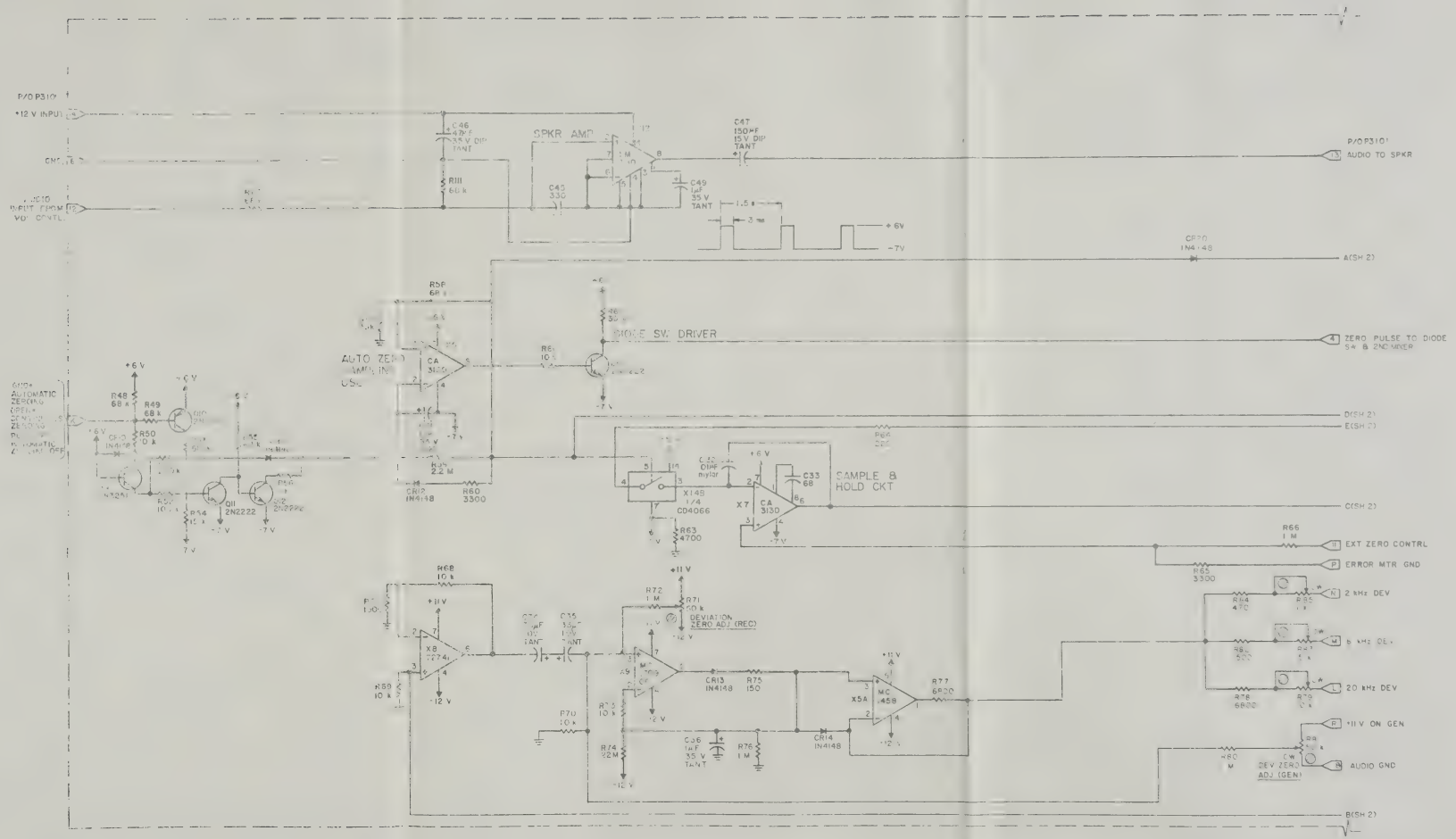

Figure 6-21. 250 kHz i.f. monitor audio A1A13, schematic diagram (sheet 1 of 3).

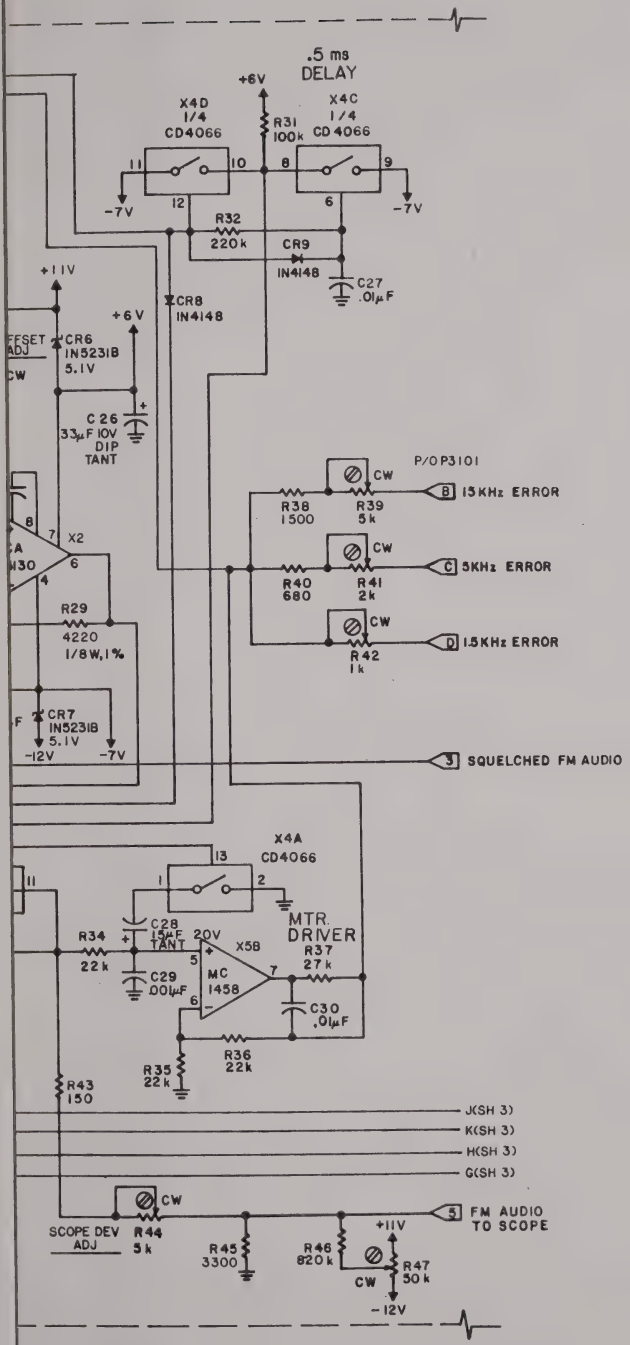

Figure 6-21. 250 kHz i.f. monitor audio A1A13, schematic diagram (sheet 2 of 3).

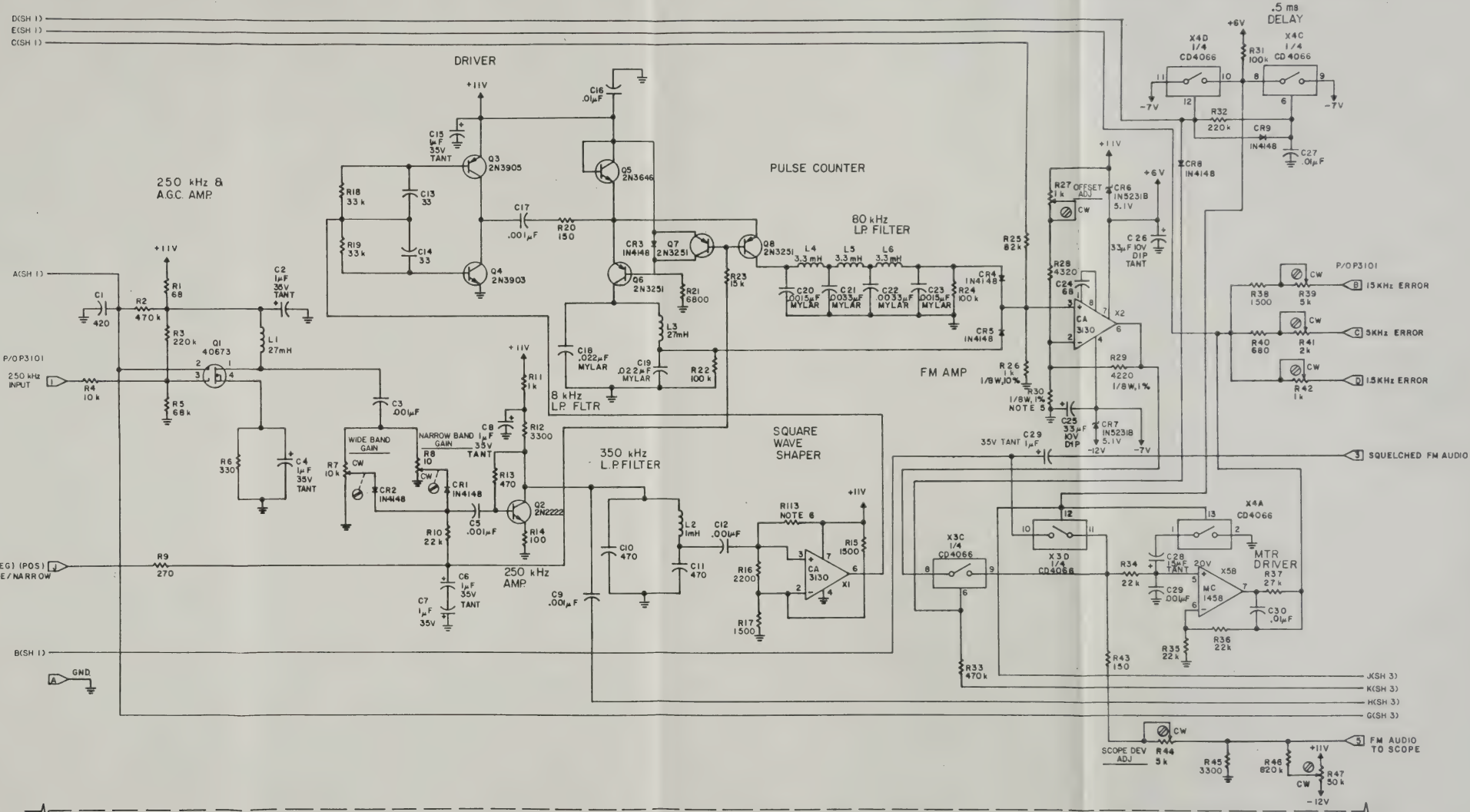

Figure 6-21. 250 kHz i.f. monitor audio A1A13, schematic diagram (sheet 2 of 3).

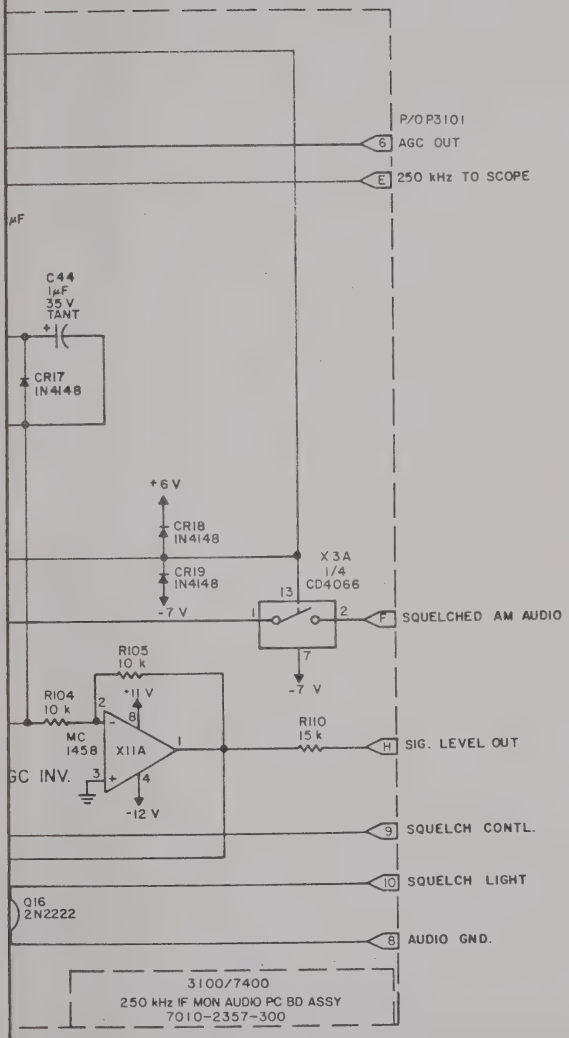

Figure 6-21. 250 kHz i.f. monitor audio A1A13, schematic diagram (sheet 3 of 3).

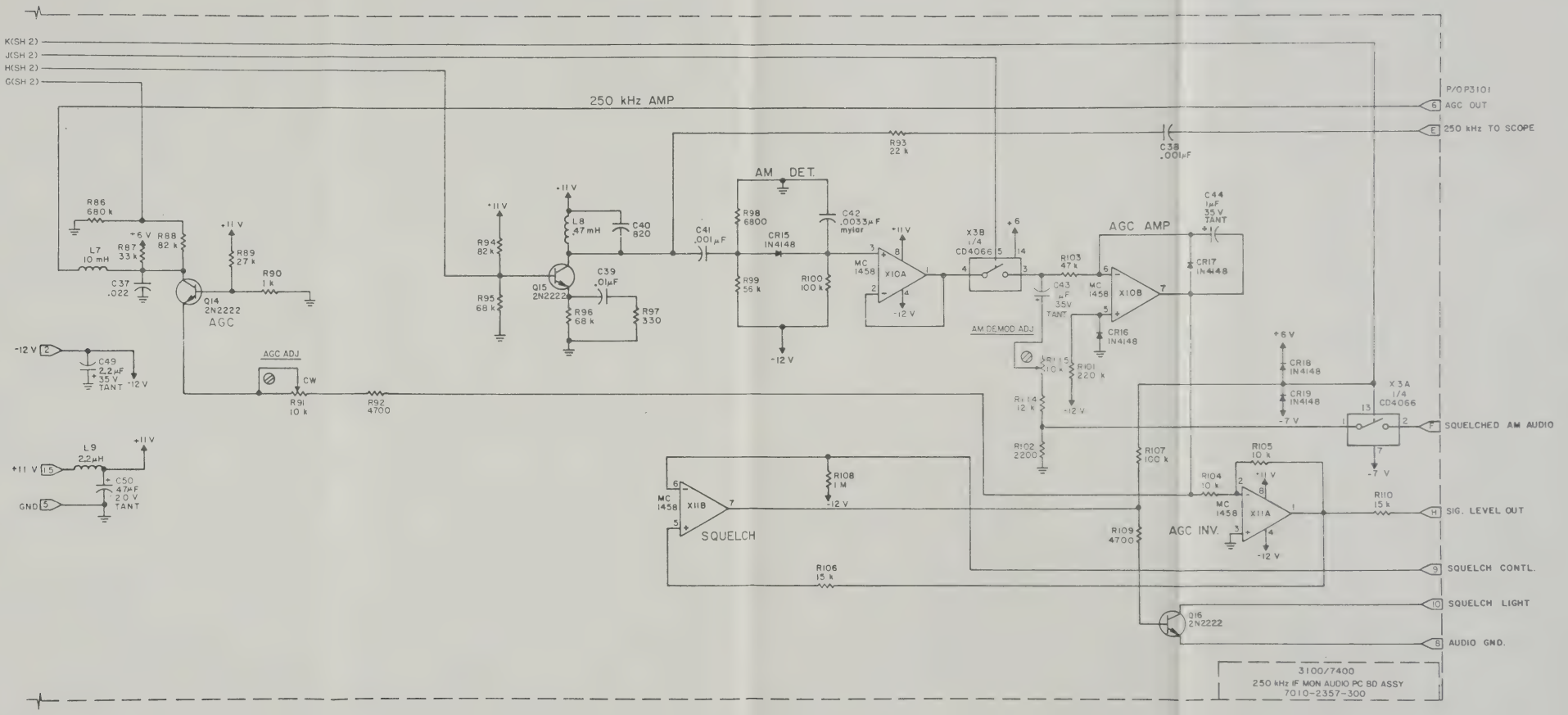

Figure 6-21. 250 kHz i.f. monitor audio A1A13, schematic diagram (sheet 3 of 3).

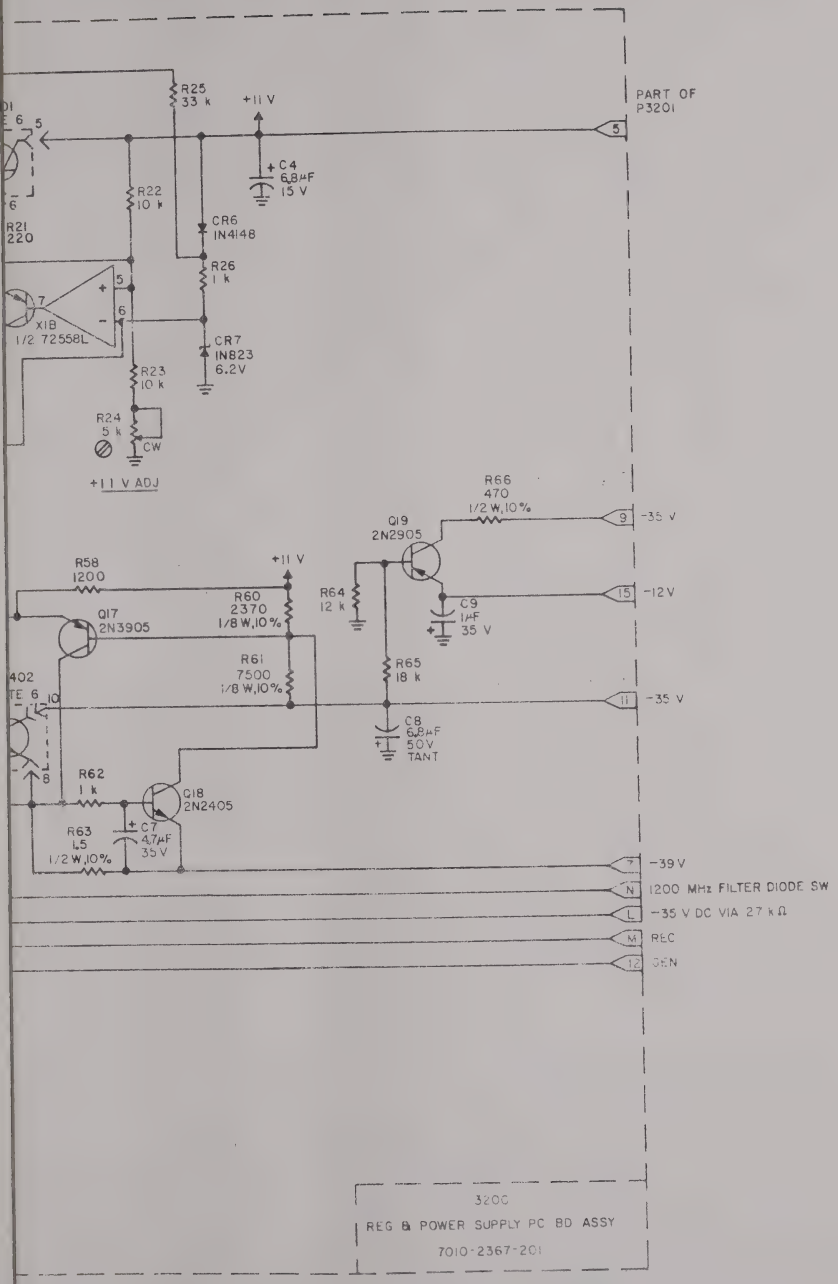

Figure 6-22. Regulator and power supply A1A14, schematic diagram.

NOTES:

1. LAST REF NO USED:
   A1A14C9
   CR13
   P1
   Q19
   R66
   X3
2. ALL RESISTORS ARE 1/4 W, 10% UNLESS OTHERWISE NOTED.
3. ALL RESISTANCE IS EXPRESSED IN OHMS UNLESS OTHERWISE NOTED.
4. ALL CAPACITORS ARE TANTALUM.
5. R11 IS SET AT TEST
   NOMINAL 8.2 M
   RANGE 4.7 M-12 M
6. A1A2Q1 & A1A2Q2 ARE LOCATED ON MOTHER BD. ASSY 7005-2363-701 AND ARE SHOWN HERE FOR REF ONLY.
7. ALL REF NO'S CARRY AN ASSIGNED DESIGNATOR SERIES (e.g. THIS SCHEMATIC CARRIES SERIES A1A14; THEREFORE, R1 IS DESIGNATED A1A14R1).

DRAFTSMAN NOTES:

ON SHT 1 P320' BECOMES A1A14P1

A1A14
REG & PWR SUPPLY, P.C. BD. ASSY
7010-3267-201

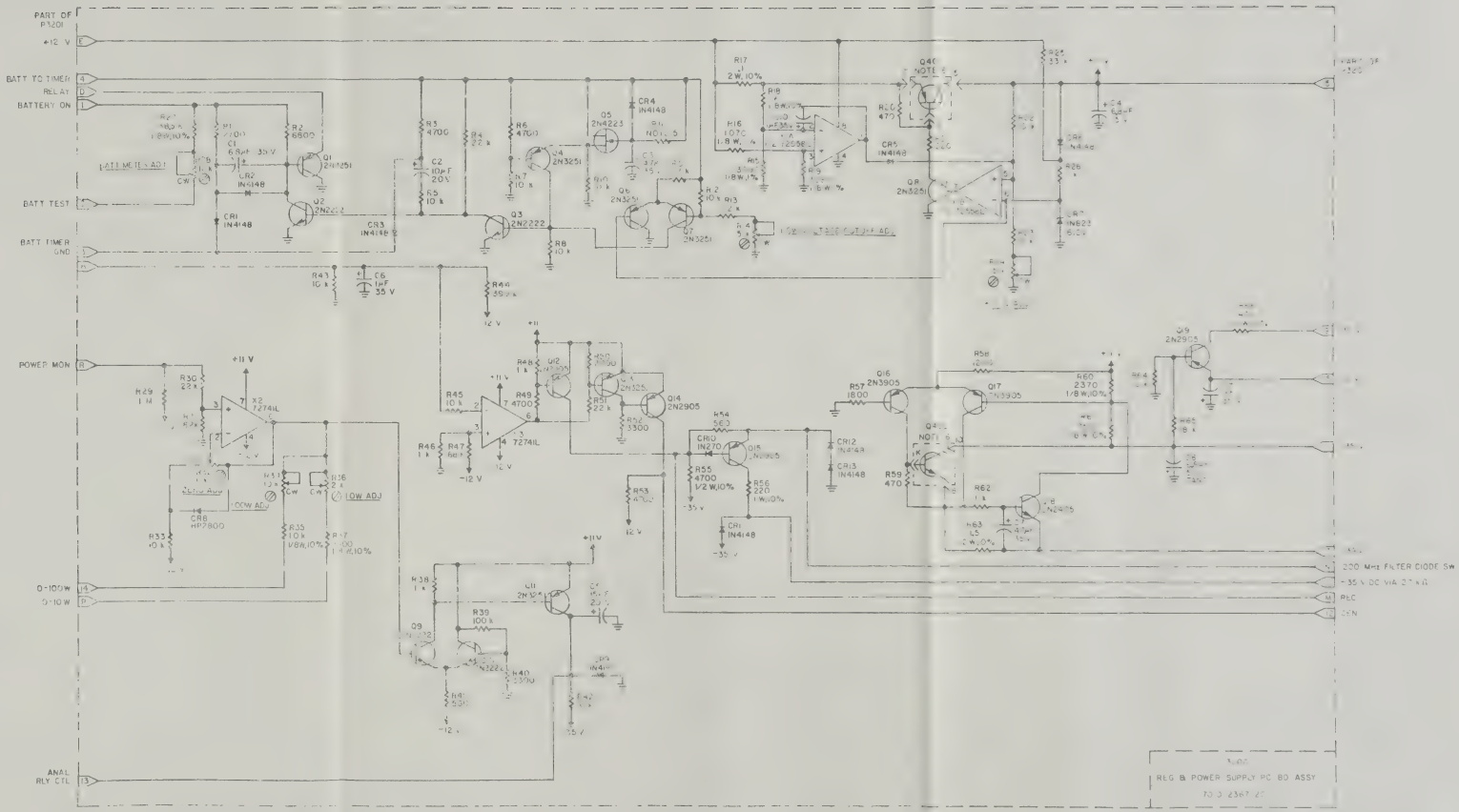

Figure 6-22. Regulator and power supply A1A14, schematic diagram.

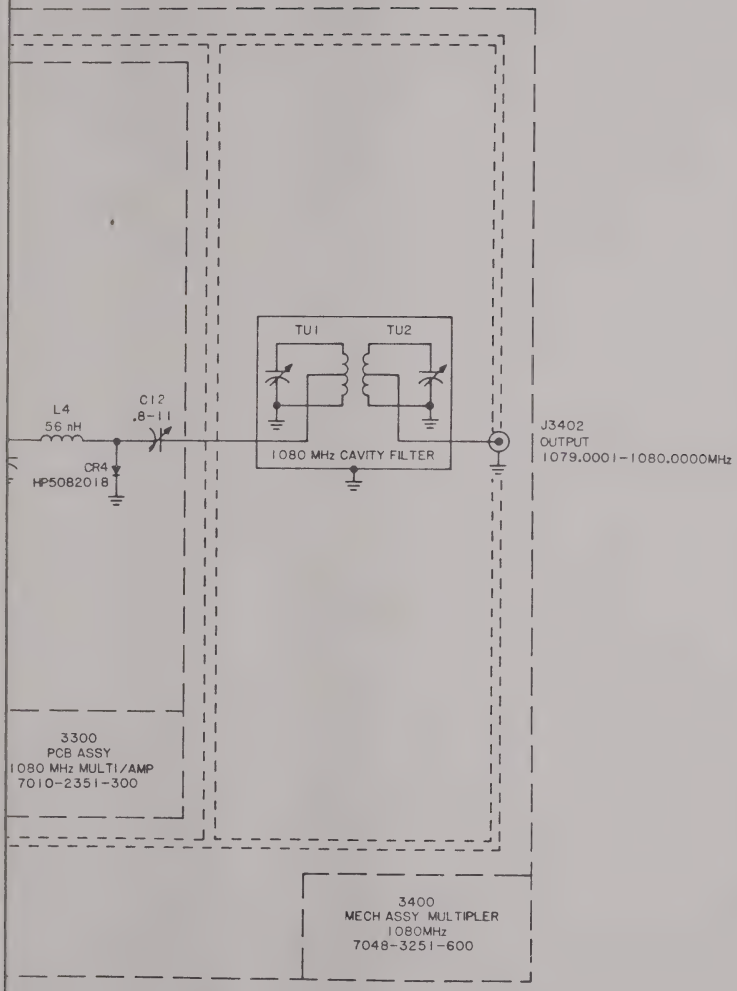

Figure 6-23. 1080 MHz multiplier amplifier A1A15, schematic diagram.

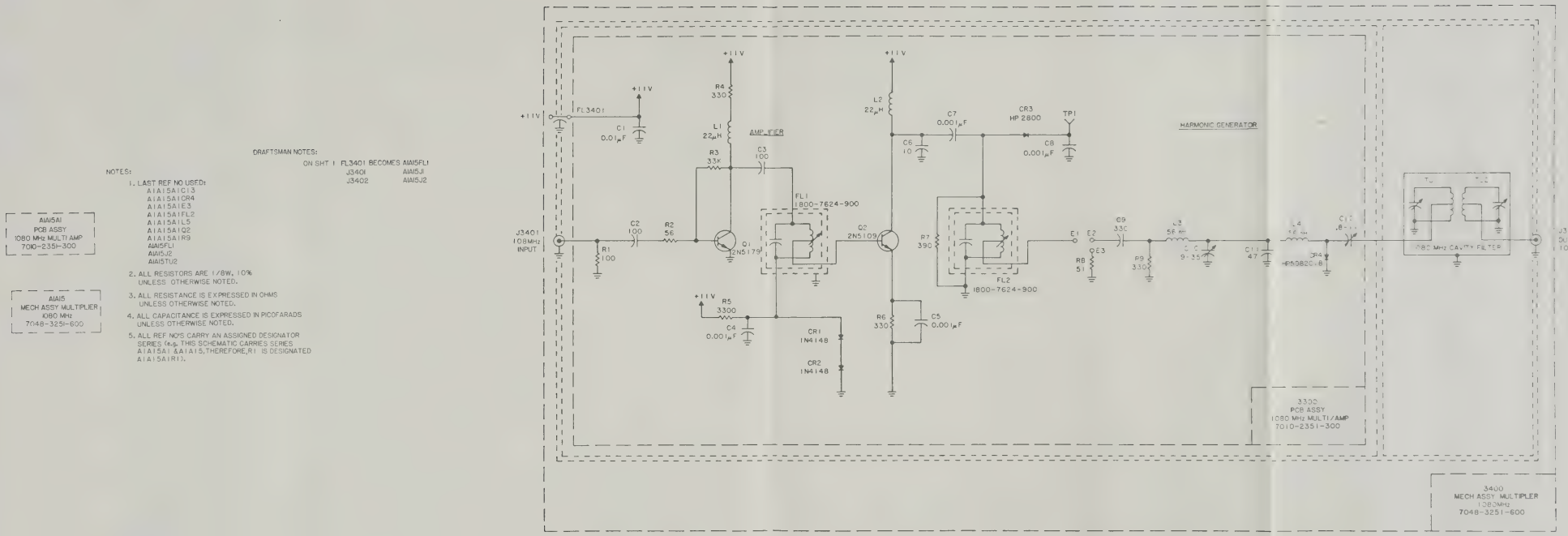

Figure 6-23. 1080 MHz multiplier amplifier A1A15, schematic diagram.

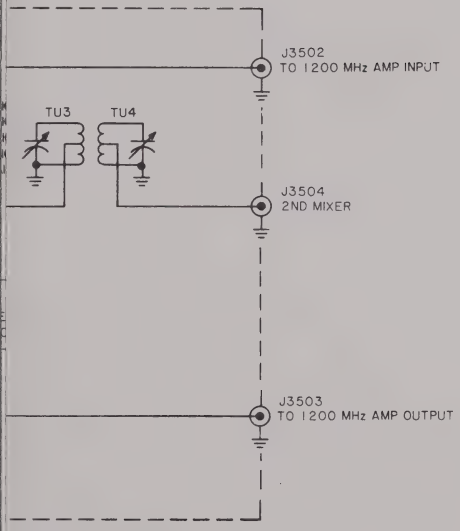

Figure 6-24. 1200 MHz diode switch A1A16, schematic diagram.

DRAFTSMAN NOTES:

ON SHT 1 J3501 BECOMES A1A16J1
J3502 A1A16J2
J3503 A1A16J3
J3504 A1A16J4
FL3501 A1A16FL1

NOTES:

1. LAST REF NO. USED:
   A1A16CR12
   FL1
   J4
   L6
   TU4

2. ALL REF NO'S CARRY AN ASSIGNED DESIGNATOR SERIES (e.g. THIS SCHEMATIC CARRIES SERIES A1A16; THEREFORE, CR1 IS DESIGNATED A1A16CR1).

A1A16
1200 MHz FILTER DIODE SW ASSY
7013-2359-700

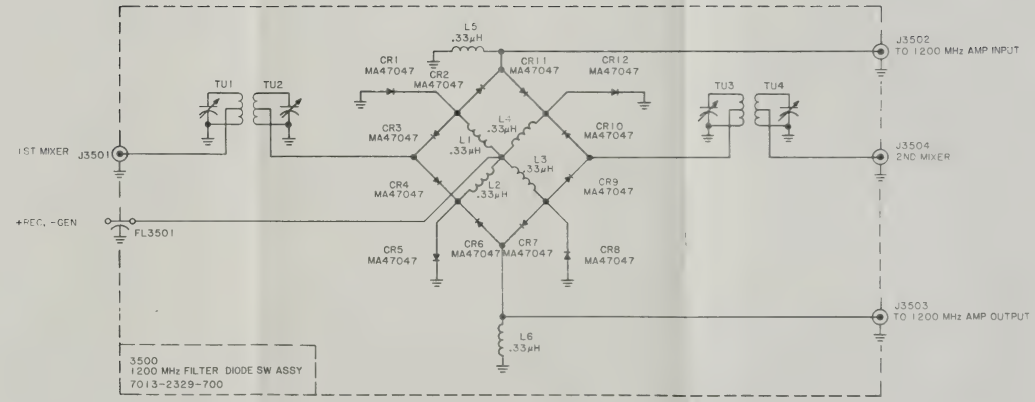

Figure 6-24. 1200 MHz diode switch A1A16, schematic diagram.

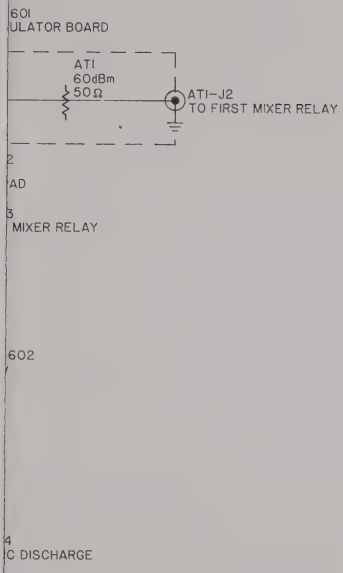

Figure 6-25. Power monitor A1A17, schematic diagram.

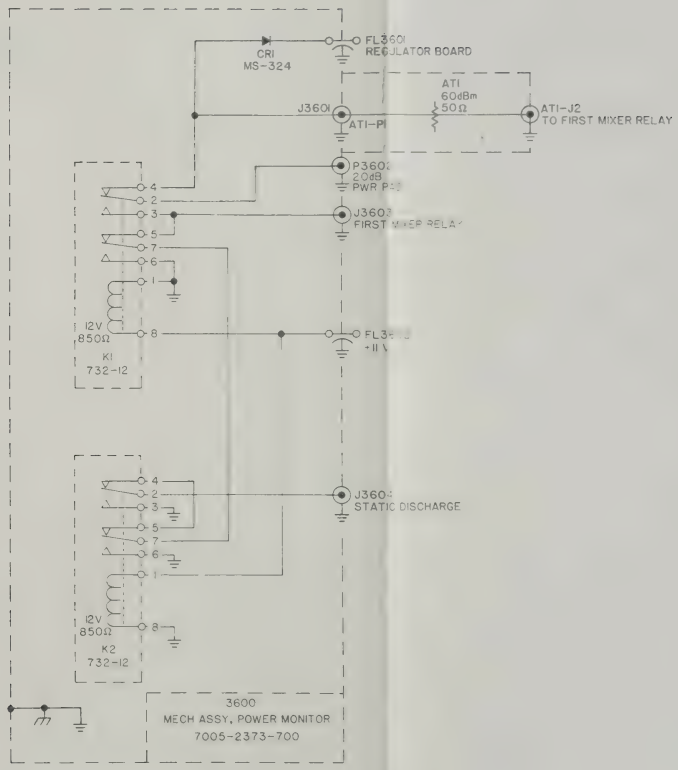

Figure 6-25. Power monitor A1A17, schematic diagram.

DRAFTSMAN NOTES:

ON SHT 1 J3601 BECOMES AIAI7JI
J3603 AIAI7J3
J3604 AIAI7J4
P3602 AIAI7P2
FL3601 AIAI7FLI
FL3602 AIAI7FL2

NOTES:

1. LAST REF NO USED:
AIAI7ATI
ATI-J2
ATI-PI
CRI
FL2
J4
K2
P2

2. ALL REF NO'S CARRY AN ASSIGNED DESIGNATOR SERIES (e.g. THIS SCHEMATIC CARRIES SERIES AIAI7; THEREFORE, CRI IS DESIGNATED AIAI7CRI).

AIAI7
MECH ASSY, POWER MONITOR
7005-2373-700

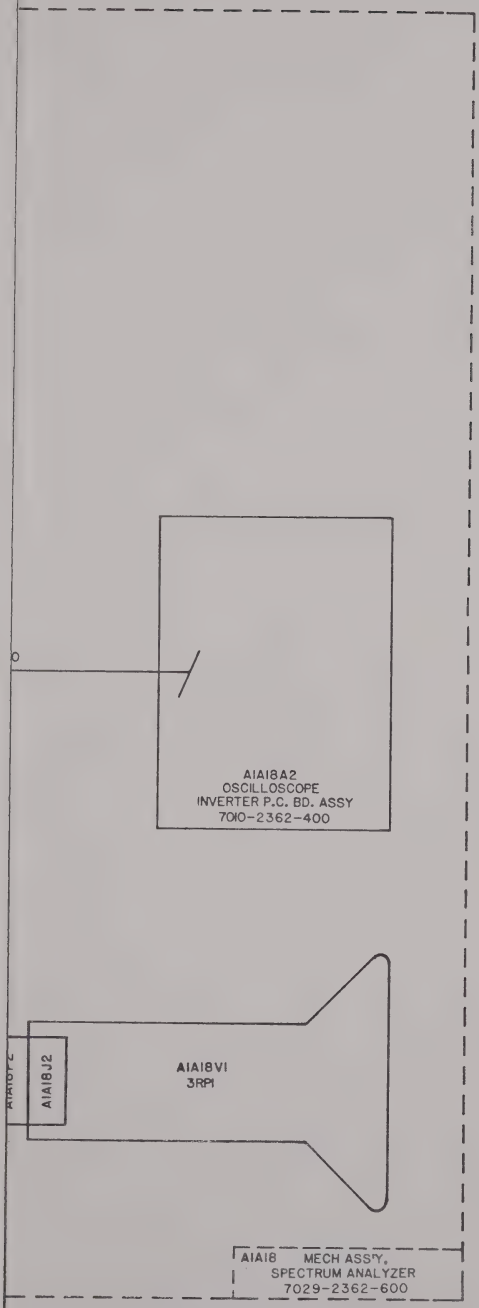

Figure 6-26. Spectrum analyzer A1A18, schematic diagram.

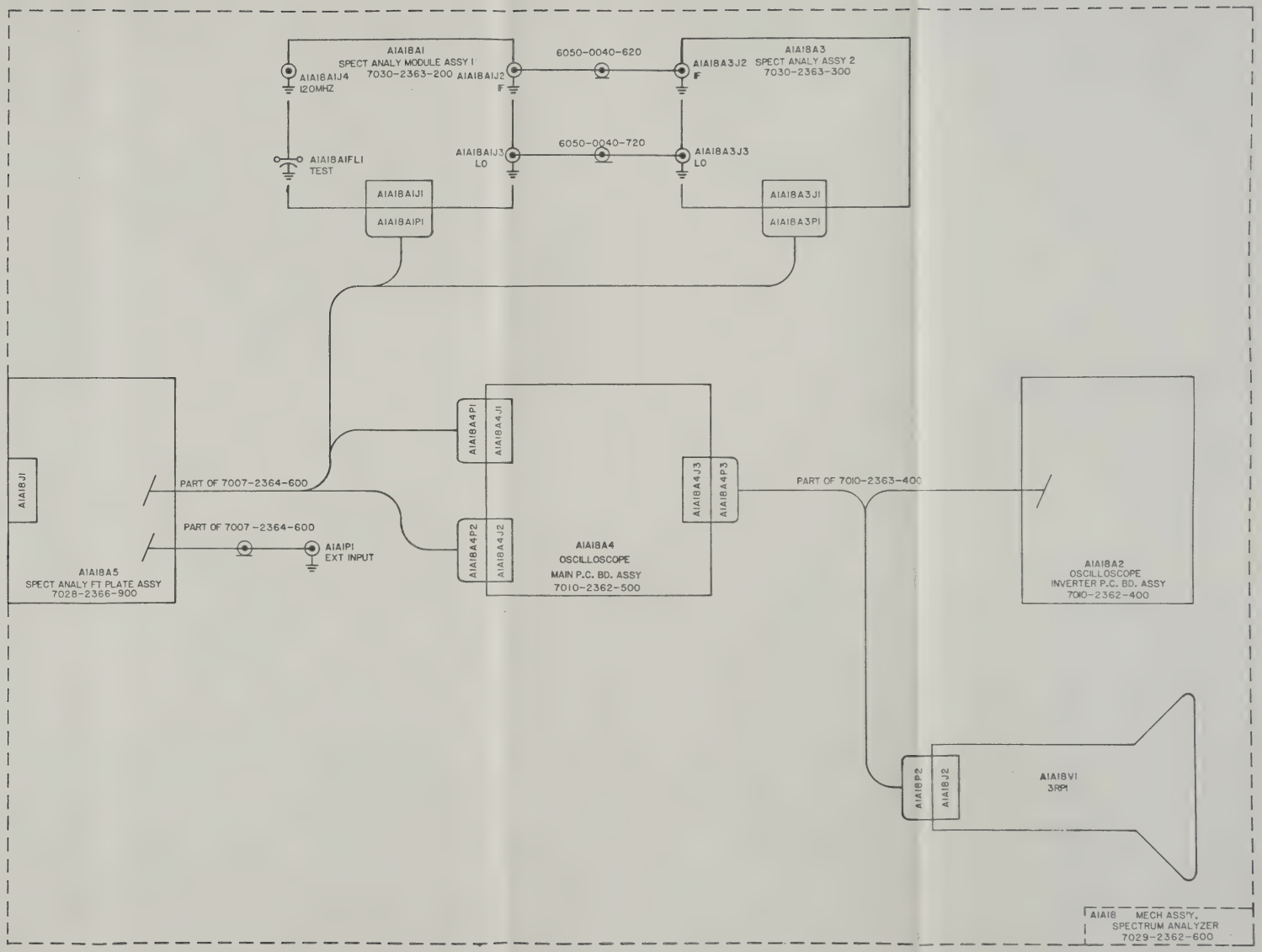

Figure 6-26. Spectrum analyzer A1A18, schematic diagram.

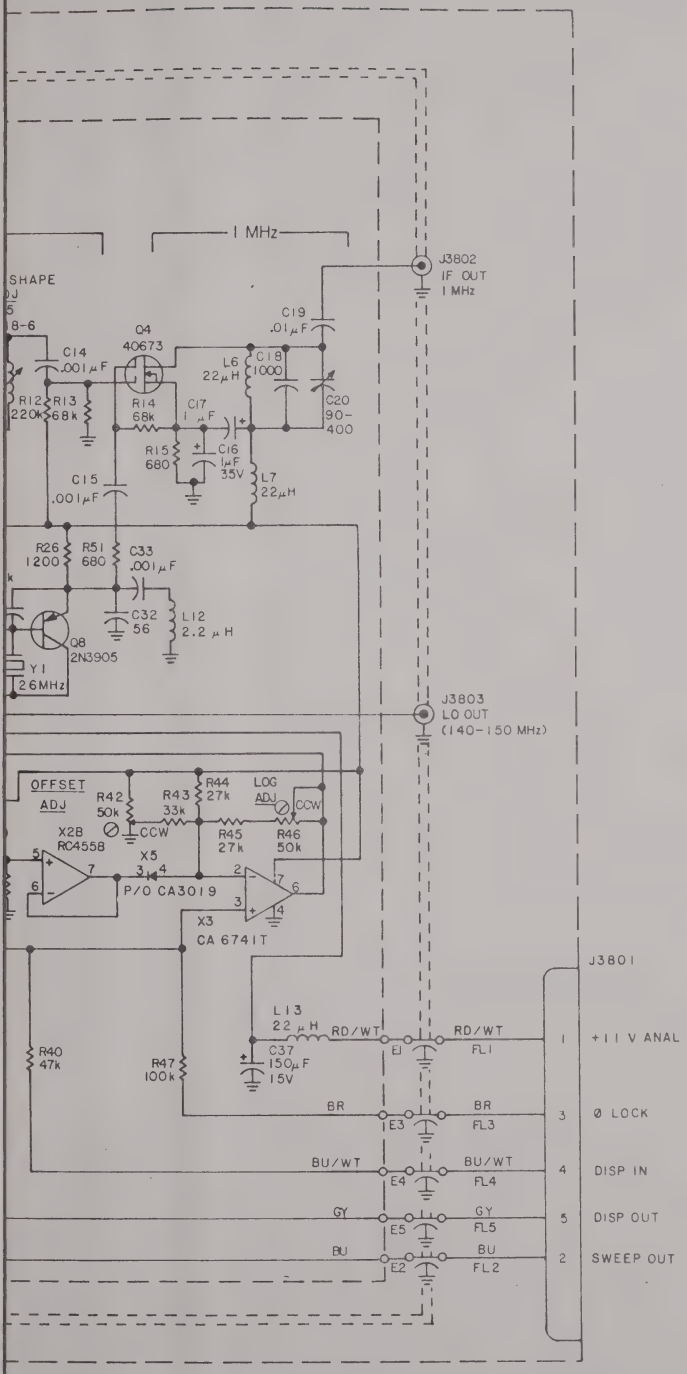

Figure 6-27. Spectrum analyzer module no. 1 A1A18A1, schematic diagram.

A1A18A1
SPECT ANALY
MODULE ASSY 1
7030-2363-200

A1A18A1A1
SPECT ANALY
PC BD ASSY 1
7010-2359-300

NOTES:

1. LAST REF NO USED:

A1A18A1FL6	
J4	
A1A18A1A1C37	
CR2	R51
E6	RT1
L13	X5
Q9	Y1
	YFL1

2. ALL RESISTORS ARE 1/4W, 10% UNLESS OTHERWISE NOTED.
3. ALL RESISTANCE IS EXPRESSED IN OHMS UNLESS OTHERWISE NOTED.
4. ALL CAPACITANCE IS EXPRESSED IN PICOFARADS UNLESS OTHERWISE NOTED.
5. ALL REF NO'S CARRY AN ASSIGNED DESIGNATOR SERIES (e.g. THIS SCHEMATIC CARRIES SERIES A1A1BA1 & A1A1BA1A1; THEREFORE R1 IS DESIGNATED A1A1BA1A1R1).

DRAFTSMAN NOTE:

ON SHT 1

J3801 BECOMES	A1A1BA1J1
J3802	A1A1BA1J2
J3803	A1A1BA1J3
J3804	A1A1BA1J4
FL3806	A1A1BA1FL6

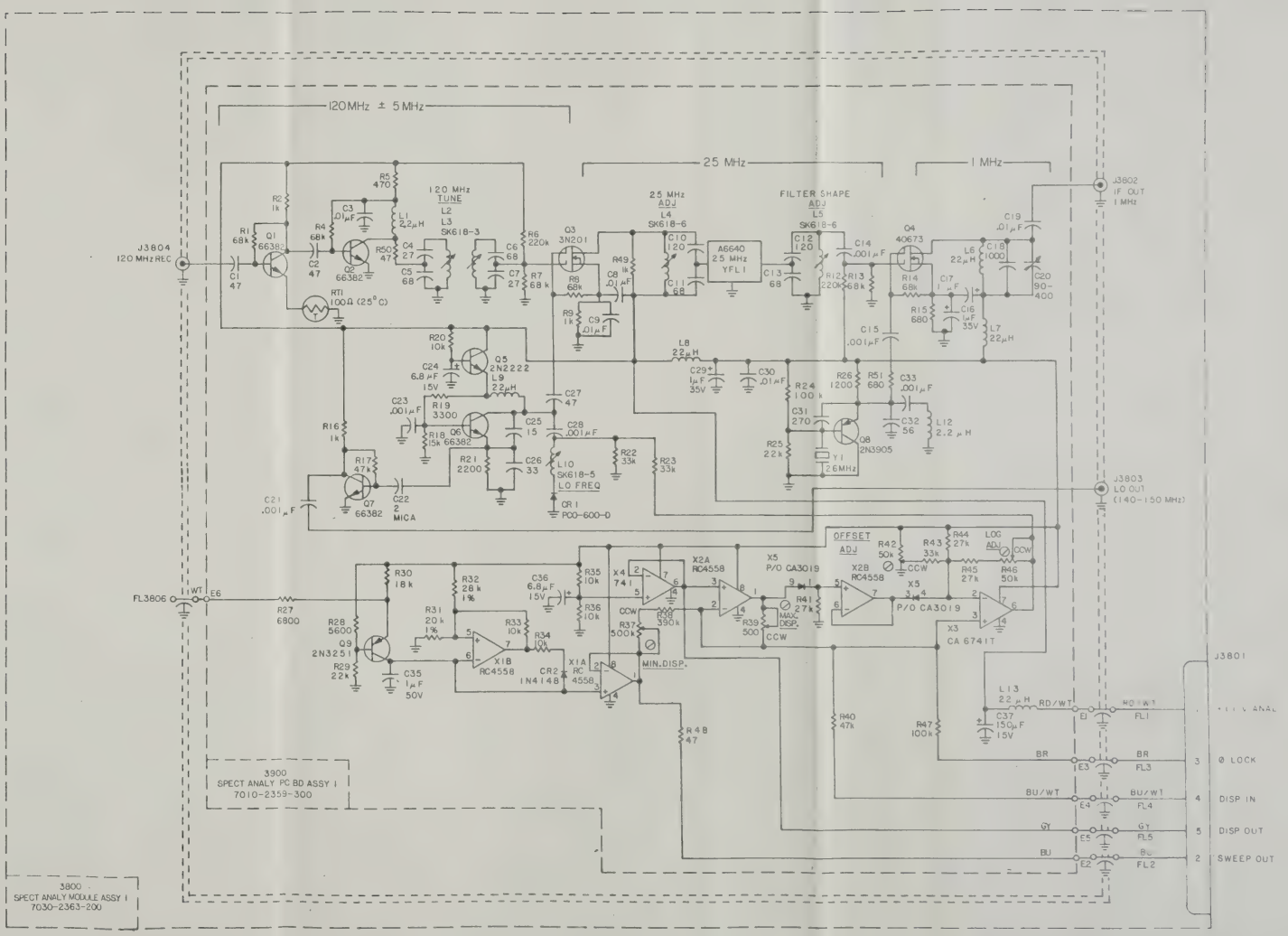

Figure 6-27. Spectrum analyzer module no. 1 A1A18A1, schematic diagram.

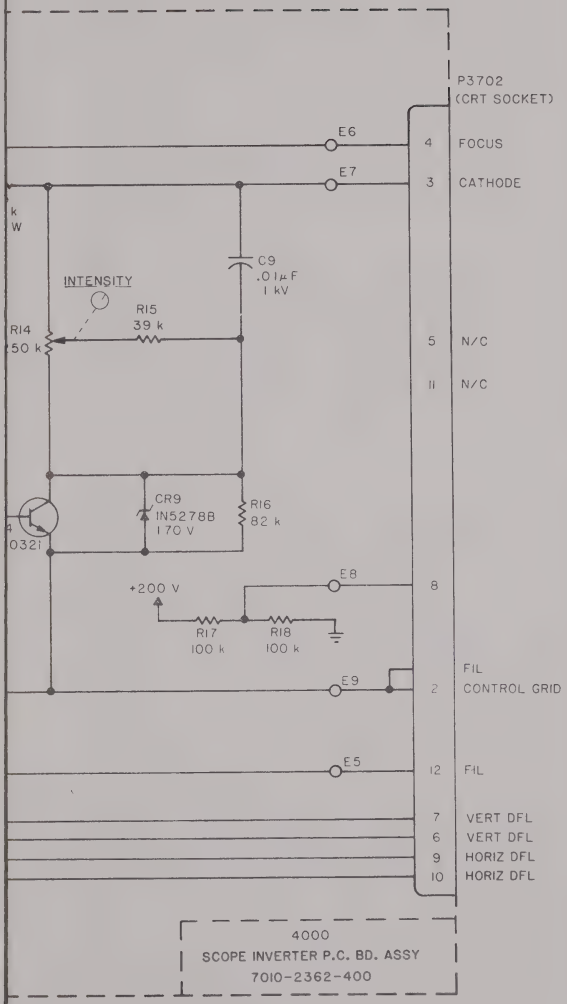

Figure 6-28. Oscilloscope inverter board A1A18A2, schematic diagram.

DRAFTSMAN NOTES:

ON SHT 1 P3702 BECOMES A1A18P2
P4303 A1A18A4P3

NOTES:

1. LAST REF NO USED:
   A1A18P2
   A1A18A2C11
   A1A18A2CR9
   A1A18A2E9
   A1A18A2L1
   A1A18A2Q4
   A1A18A2R19
   A1A18A2U1
   A1A18A4P3

2. ALL RESISTORS ARE 1/4 W, 10% UNLESS OTHERWISE NOTED.

3. ALL RESISTANCE IS EXPRESSED IN OHMS UNLESS OTHERWISE NOTED.

4. ALL REF NO'S CARRY AN ASSIGNED DESIGNATOR SERIES (e.g. THIS SCHEMATIC CARRIES SERIES A1A18A2; THEREFORE, R1 IS DESIGNATED A1A18A2R1).

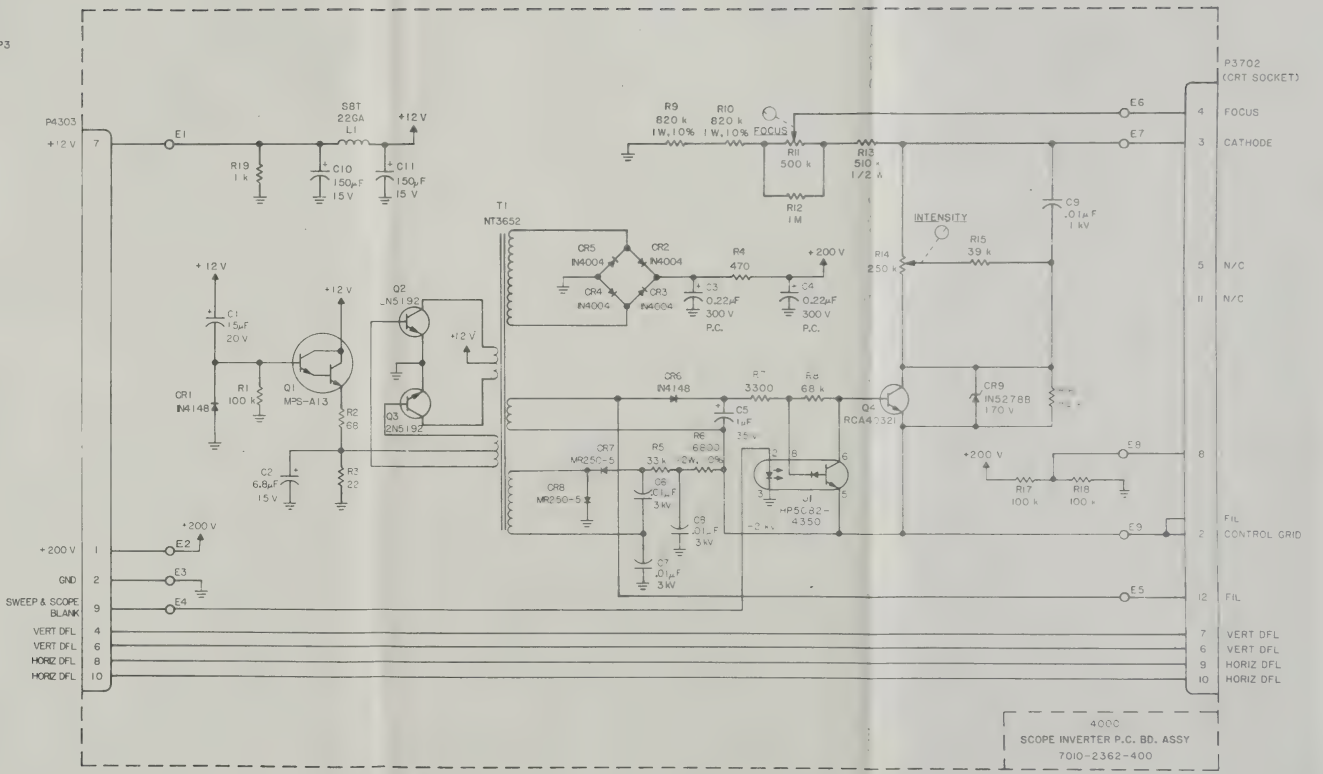

Figure 6-28. Oscilloscope inverter board A1A18A2, schematic diagram.

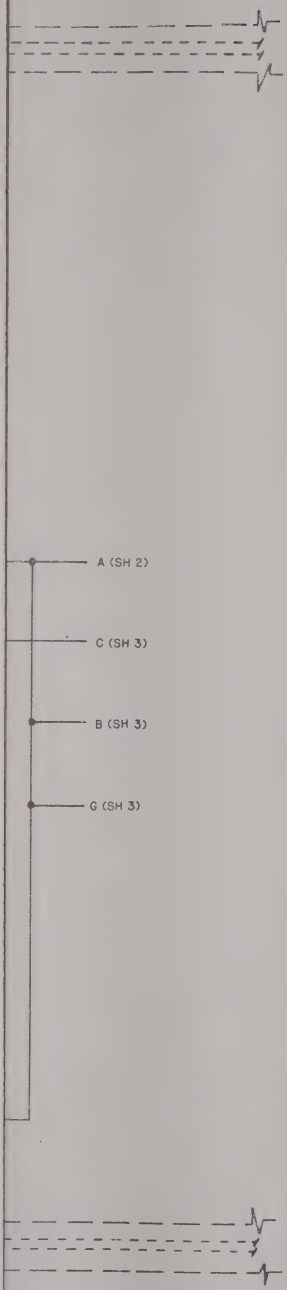

Figure 6-29. Spectrum analyzer module no. 2 A1A18A3, schematic diagram (sheet 1 of 3).

NOTES:

1. LAST REF NO USED:
   A1A18A3FL6
   A1A18A3J3
   A1A18A3A1C42
   A1A18A3A1CR7
   A1A18A3A1IC6
   A1A18A3A1L6
   A1A18A3A1Q14
   A1A18A3A1R17
   A1A18A3A1T2
   A1A18A3A1X11
   A1A18A3A1Y1

DRAFTSMAN NOTES:

ON SHT 1 J4101 BECOMES A1A18A3J1

J4102	A1A18A3J2
J4103	A1A18A3J3
FL4101	A1A18A3FL1
FL4102	A1A18A3FL2
FL4103	A1A18A3FL3
FL4104	A1A18A3FL4
FL4105	A1A18A3FL5
FL4106	A1A18A3FL6

2. ALL RESISTORS ARE 1/8 W, 10% UNLESS OTHERWISE NOTED.
3. ALL RESISTANCE IS EXPRESSED IN OHMS UNLESS OTHERWISE NOTED.
4. ALL CAPACITANCE IS EXPRESSED IN PICOFARADS UNLESS OTHERWISE NOTED.
5. ALL REF NO'S CARRY AN ASSIGNED DESIGNATOR SERIES (e.g. THIS SCHEMATIC CARRIES SERIES A1A18A3 & A1A18A3A1; THEREFORE, R1 IS DESIGNATED A1A18A3A1R1).

A1A18A3A1
SPECT ANALYZER P.C. BD.
ASSY #2
7430-2334-300

A1A18A3
SPECT ANALY MODULE
ASSY #2
7630-2364-300

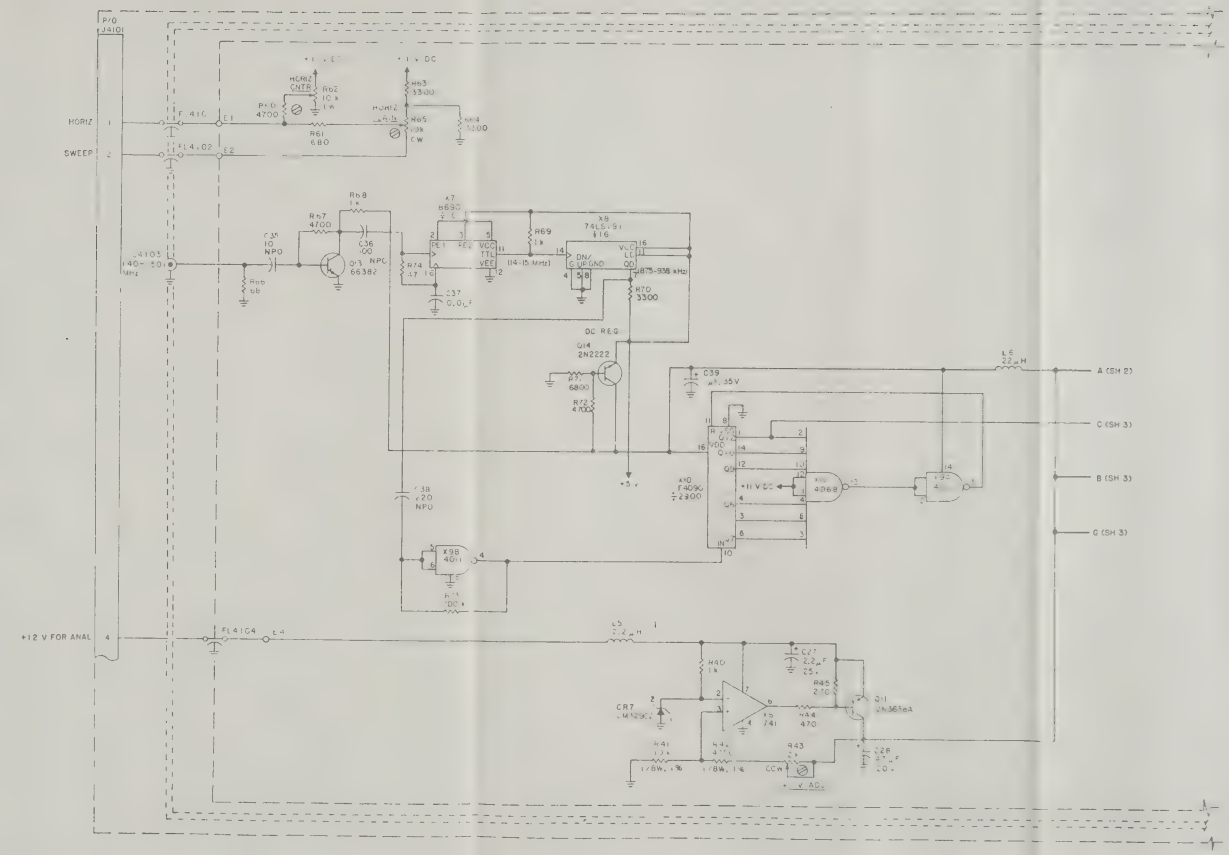

Figure 6-29. Spectrum analyzer module no. 2 A1A18A3, schematic diagram (sheet 1 of 3).

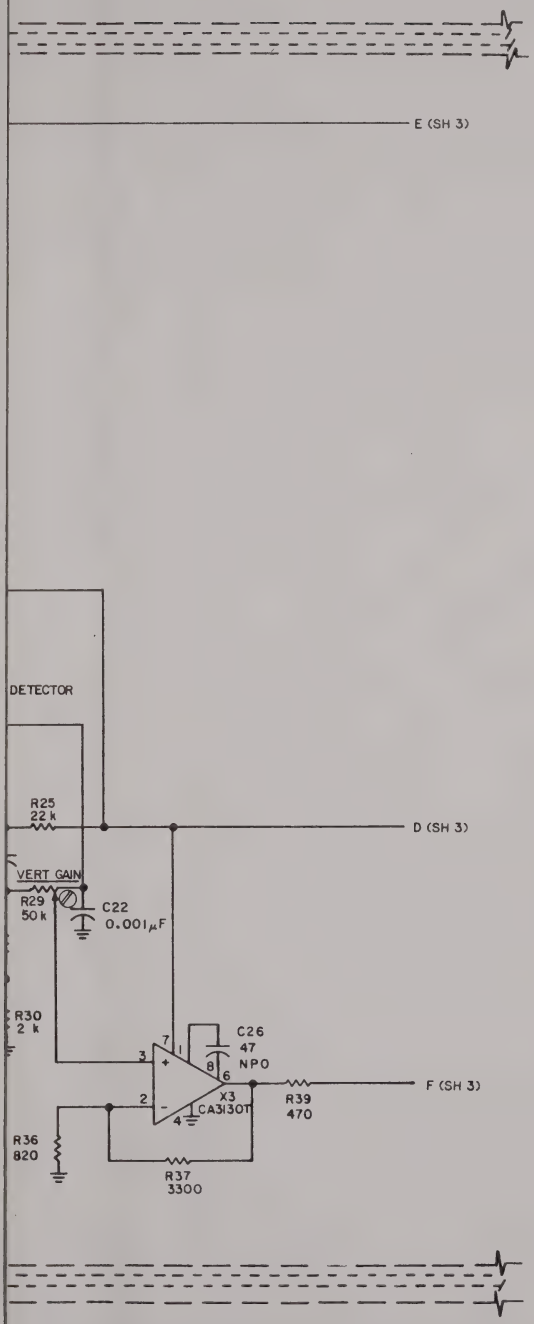

Figure 6-29. Spectrum analyzer module no. 2 A1A18A3, schematic diagram (sheet 2 of 3).

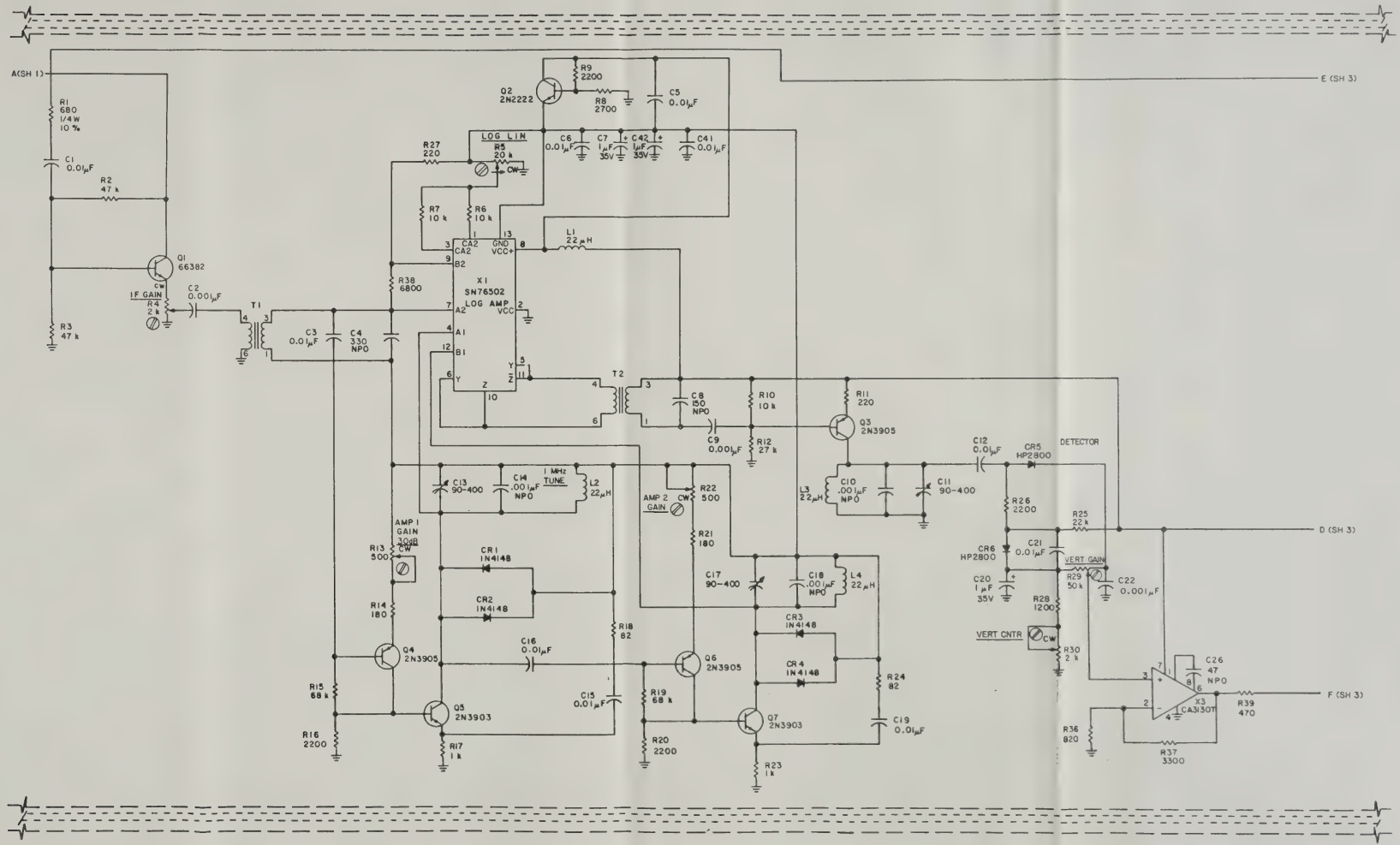

Figure 6-29. Spectrum analyzer module no. 2 A1A18A3, schematic diagram (sheet 2 of 3).

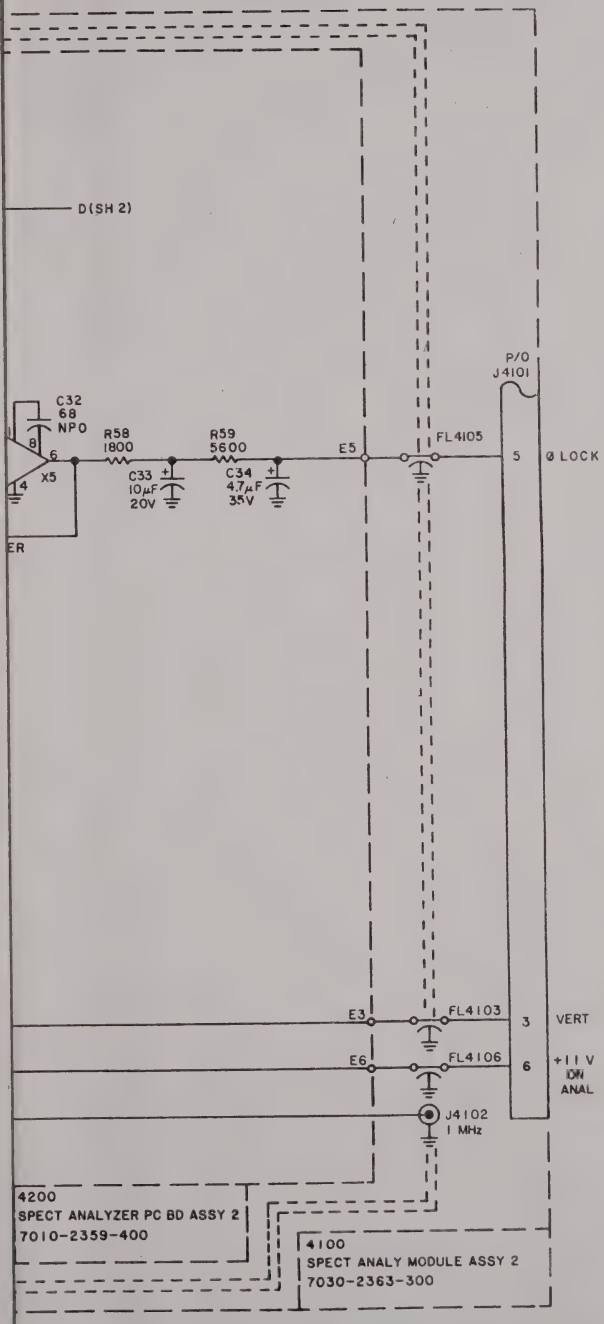

Figure 6-29. Spectrum analyzer module no. 2 A1A18A3, schematic diagram (sheet 3 of 3).

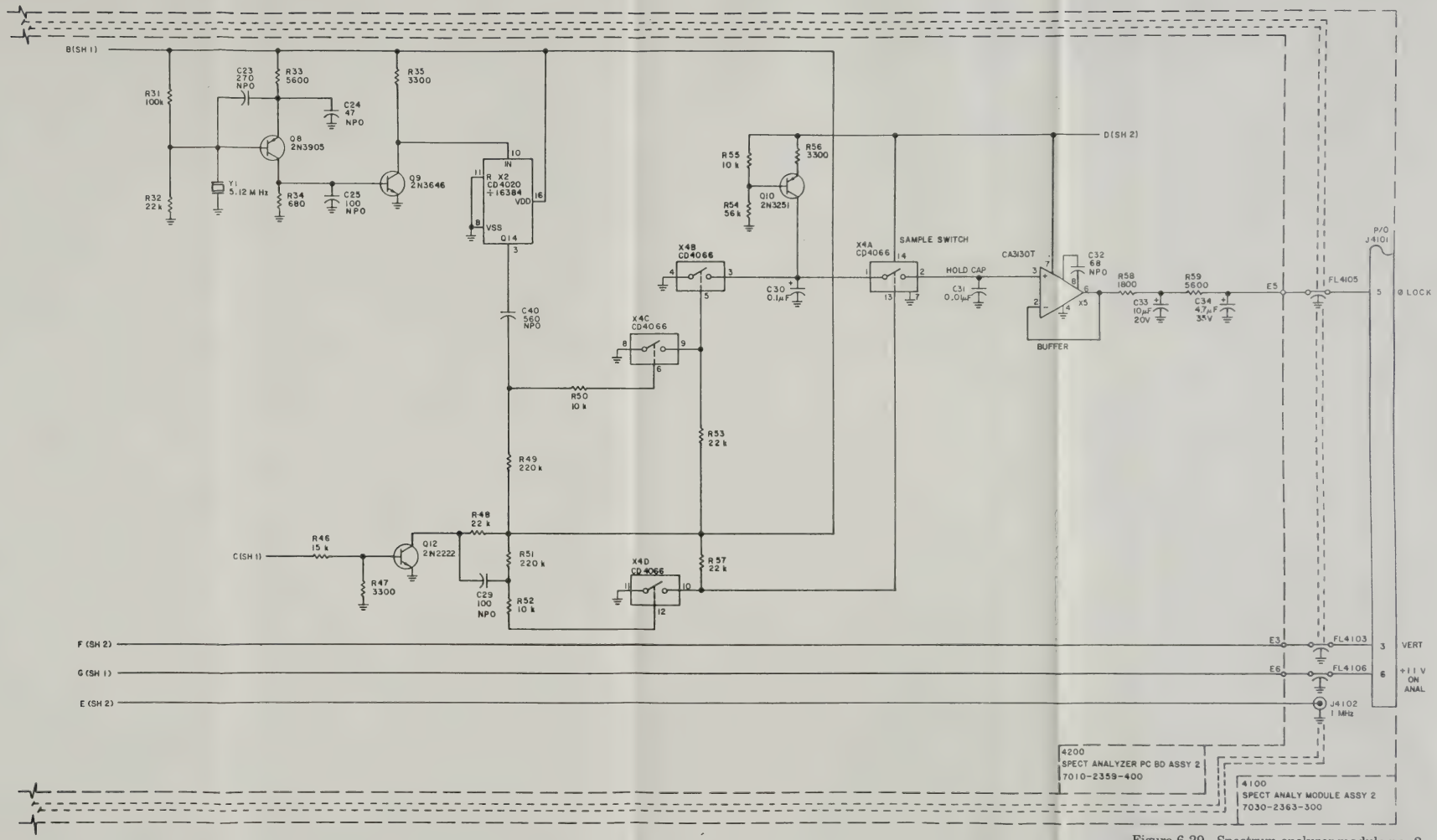

Figure 6-29. Spectrum analyzer module no. 2 A1A18A3, schematic diagram (sheet 3 of 3).

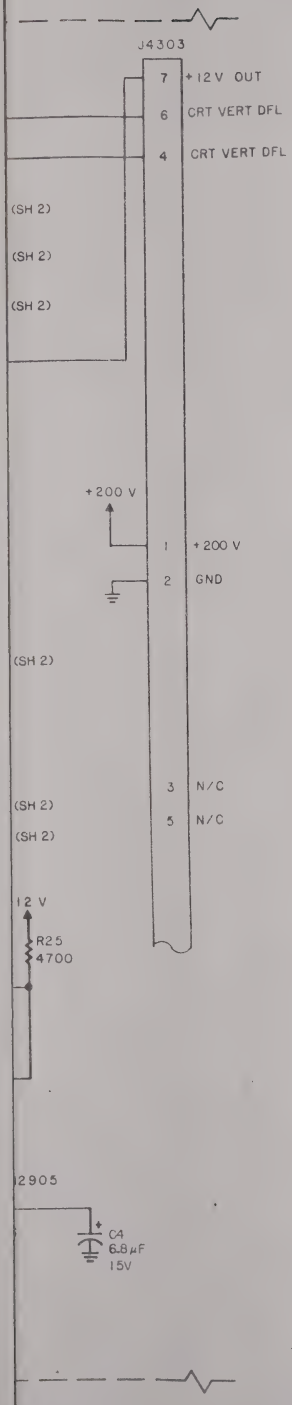

Figure 6-30. Oscilloscope main circuit board A1A18A4, schematic diagram (sheet 1 of 2).

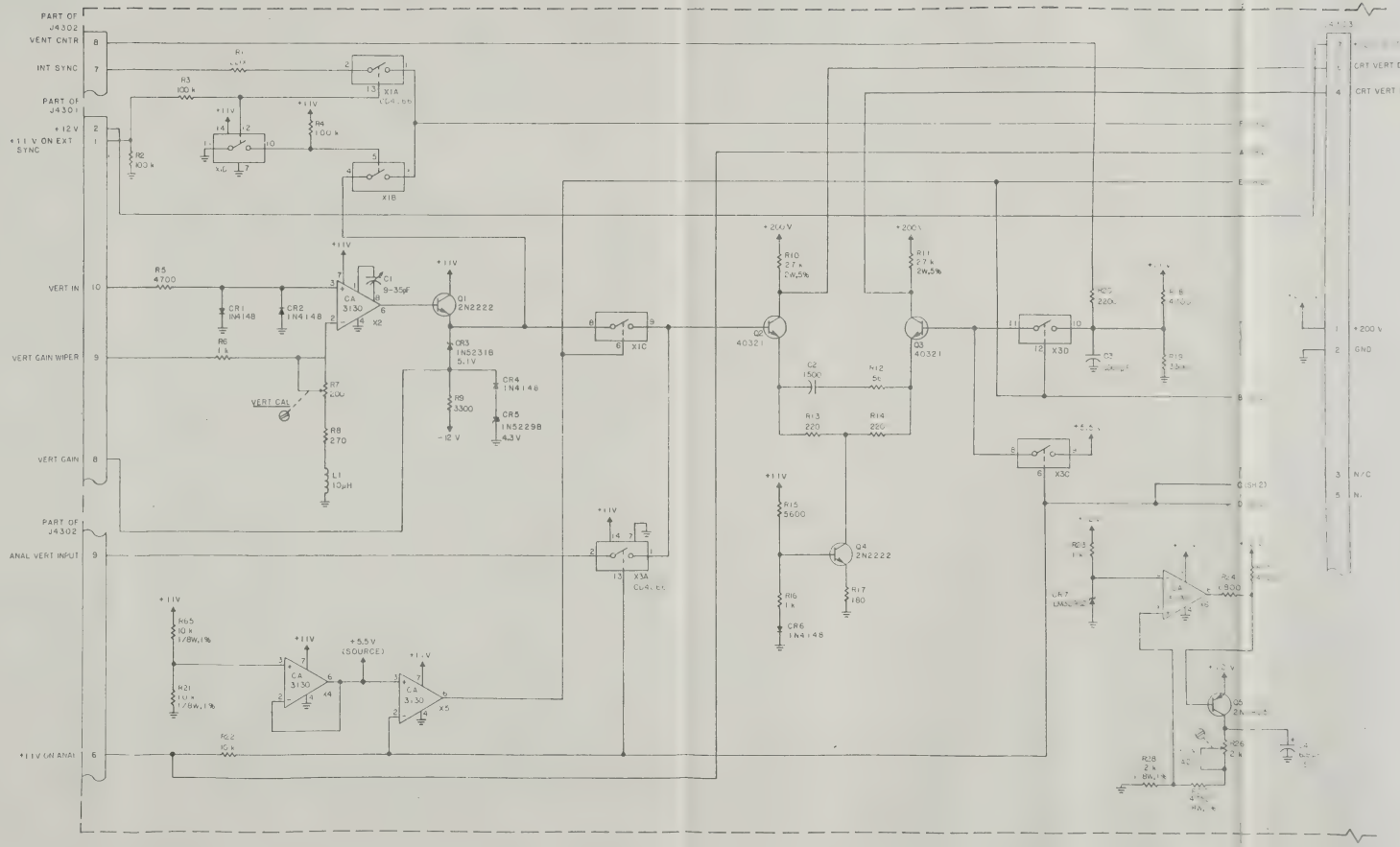

DRAFTSMAN NOTES:

ON SH 1 J4301 BECOMES A1A18A4J1
J4302 A1A18A4J2
J4303 A1A18A4J3

NOTES:

1. LAST REF NO USED:
   A1A18A4C11
   A1A18A4CR10
   A1A18A4J3
   A1A18A4L1
   A1A18A4Q7
   A1A18A4R64
   A1A18A4X9
2. ALL RESISTORS ARE 1/8W, 10% UNLESS OTHERWISE NOTED.
3. ALL RESISTANCE IS EXPRESSED IN OHMS.
4. ALL CAPACITANCE IS EXPRESSED IN PICOFARADS UNLESS OTHERWISE NOTED.
5. ALL REF NO'S CARRY AN ASSIGNED DESIGNATOR SERIES (e.g. THIS SCHEMATIC CARRIES SERIES A1A18A4; THEREFORE, R1 IS DESIGNATED A1A18A4R1).

A1A18A4
SCOPE MAIN P.C.BD. ASSY
700-2362-500

Figure 6-30. Oscilloscope main circuit board A1A18A4, schematic diagram (sheet 1 of 2).

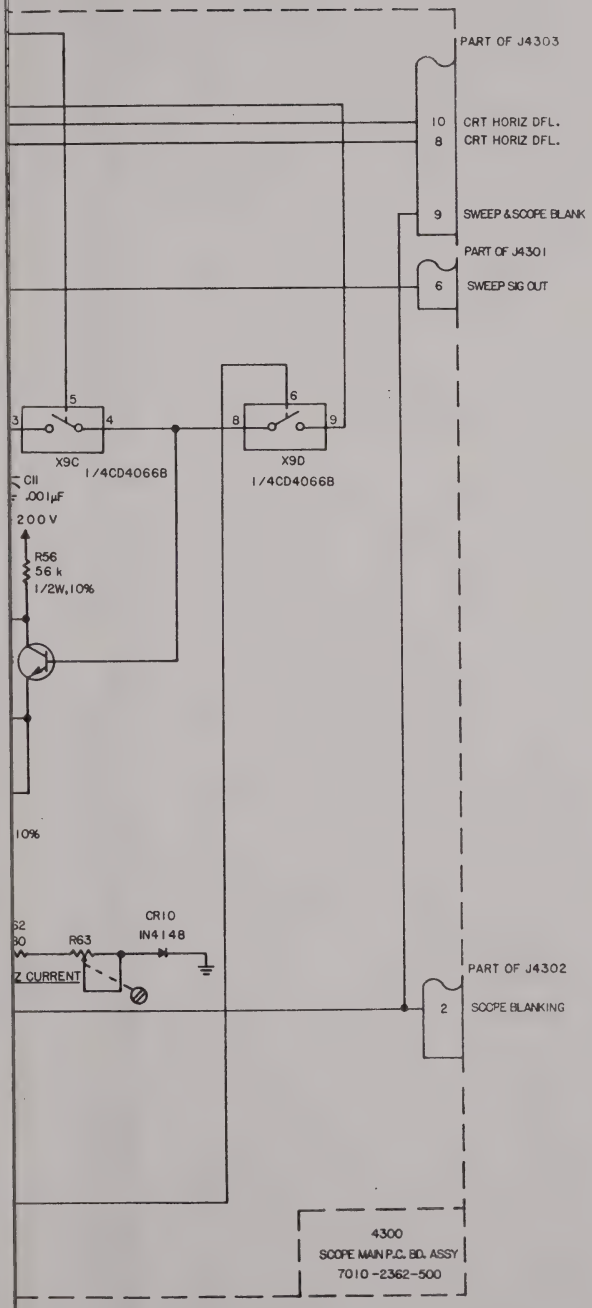

Figure 6-30. Oscilloscope main circuit board A1A18A4, schematic diagram (sheet 2 of 2).

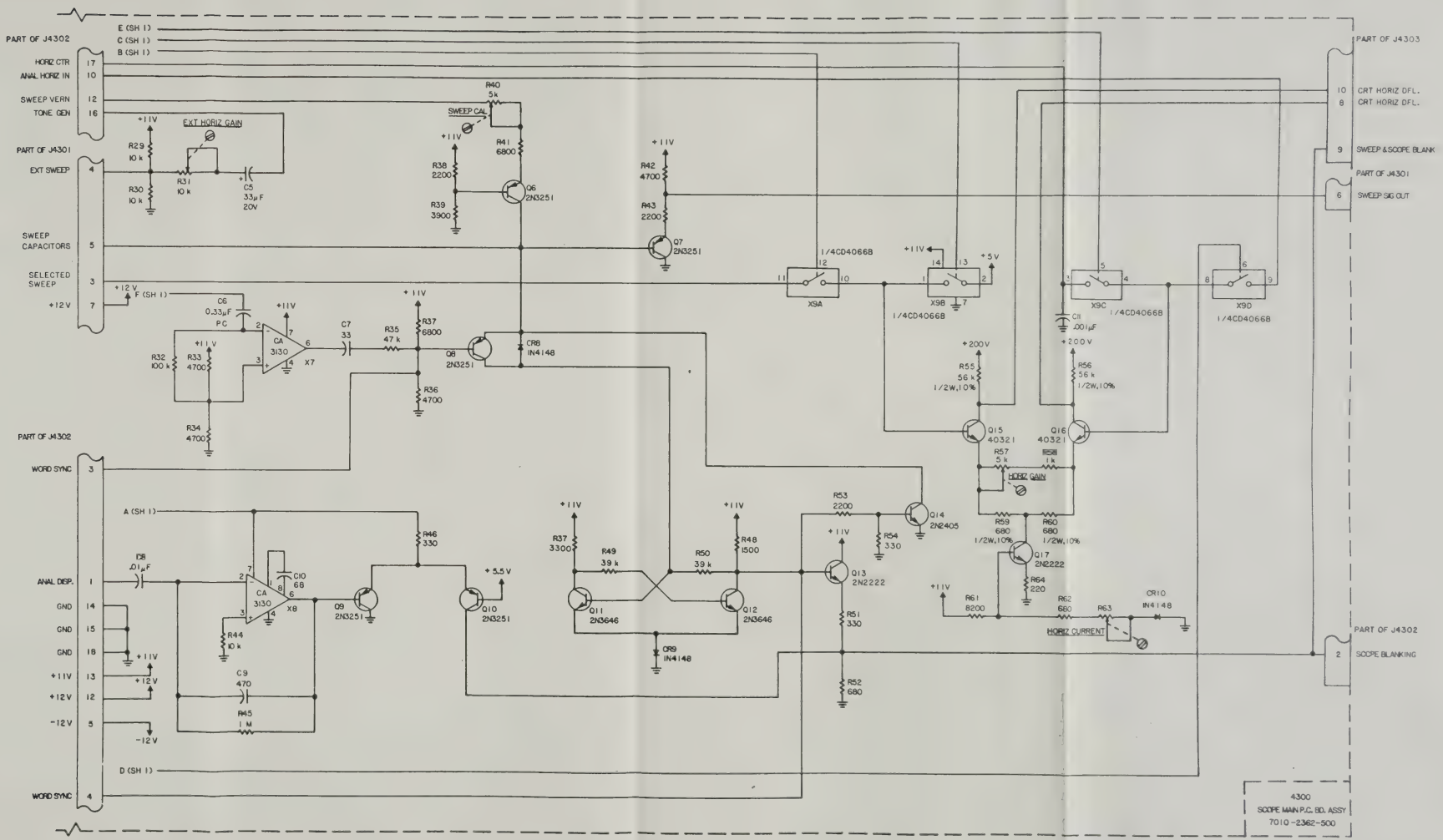

Figure 6-30. Oscilloscope main circuit board A1A18A4, schematic diagram (sheet 2 of 2).

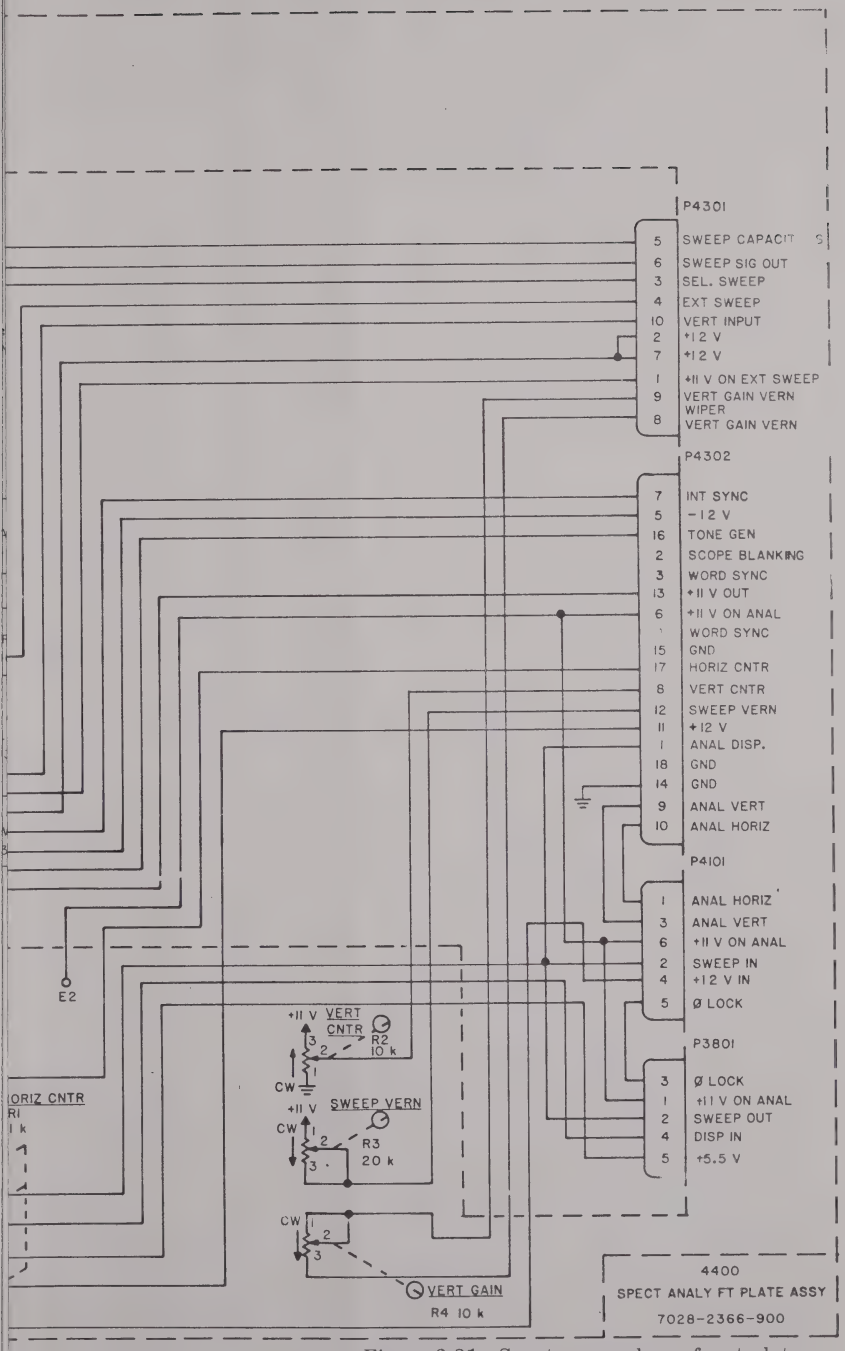

Figure 6-31. Spectrum analyzer front plate assembly A1A18A5, schematic diagram.

NOTES:

1. LAST REF NO USED:
   A1A18P
   A1A18J1
   A1A18A2P1
   A1A18A3P1
   A1A18A4P2
   A1A18A5E2
   C1
   R5
   SW1
   A1A18A5A1C4
   R5
   SW1
   A1A18A5A2C3
   R5
   SW1
   A1A18A5A3C5
   L1
   R4
   SW1

2. ALL RESISTORS ARE 1/4 W, 10% UNLESS OTHERWISE NOTED.

3. ALL RESISTANCE IS EXPRESSED IN OHMS UNLESS OTHERWISE NOTED.

4. ALL CAPACITANCE IS EXPRESSED IN PICOFARADS UNLESS OTHERWISE NOTED.

DRAFTSMAN NOTES:
ON SH 1 P201 BECOMES A1A1P1
J3701 A1A1BJ1
P3801 A1A1BA1P1
P4101 A1A1BA3P1
P4301 A1A1BA4P1
P4302 A1A1BA4P2

5. C1 IS PART OF THE SPECT ANALY FT PLATE ASSY AND CARRIES THE A1A18A5 SERIES (A1A18A5C1).

6. ALL REF NO'S CARRY AN ASSIGNED DESIGNATOR SERIES (e.g. THIS SCHEMATIC CARRIES SERIES A1A18A5, A1A18A5A1, A1A18A5A2 & A1A18A5A3 THEREFORE, R1 IS DESIGNATED A1A18A5R1).

A1A18A5
SPECT ANALY FT PLATE ASSY
7028-2366-900

A1A18A5A3
WIRE HARN ASSY SPEC ANALY
7007-2364-600

A1A18A5A2
VERTICAL GAIN SWITCH ASSY
7013-2366-800

A1A18A5A1
HORIZ SWEEP SWITCH ASSY
7013-2366-700

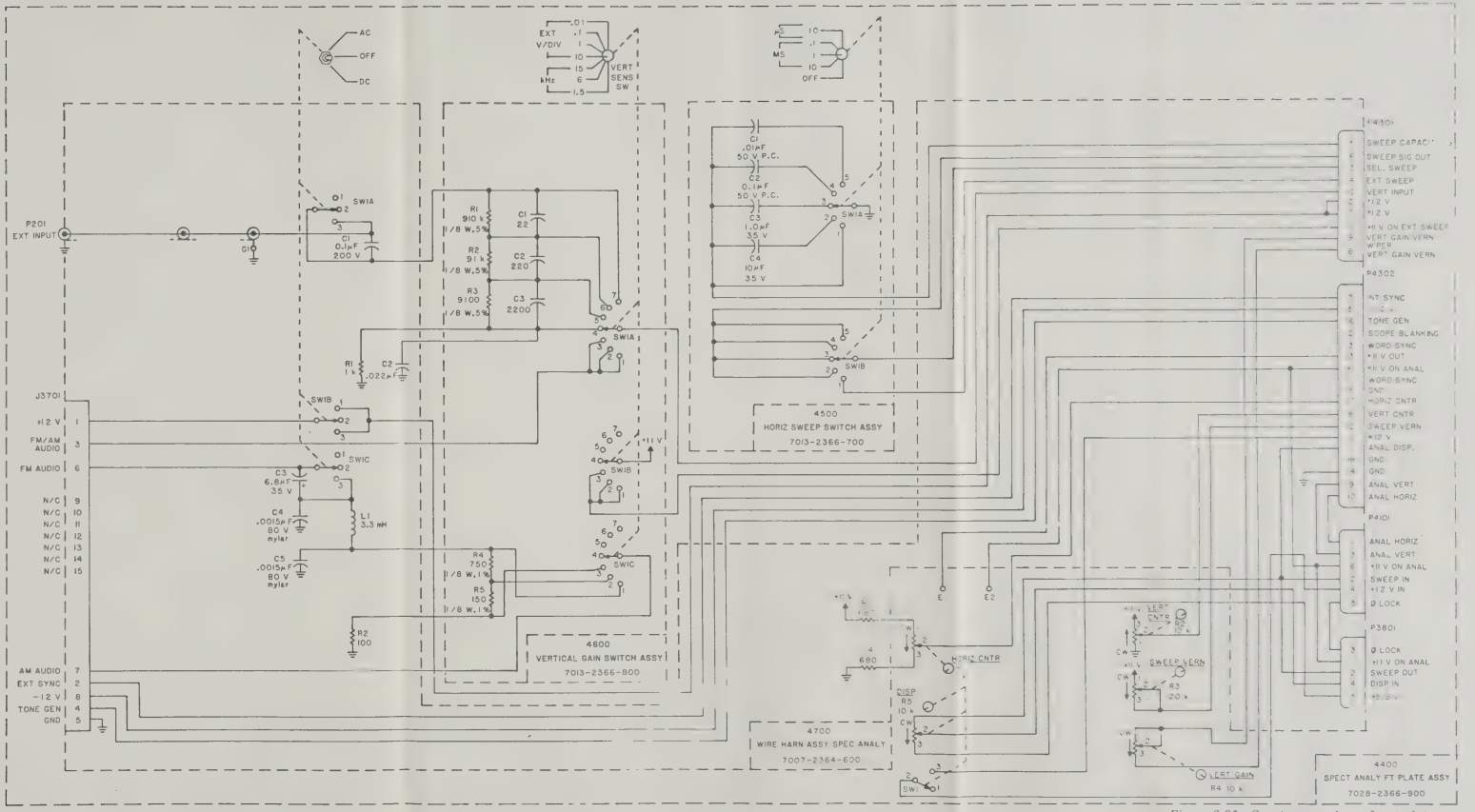

Figure 6-31. Spectrum analyzer front plate assembly A1A18A5, schematic diagram.

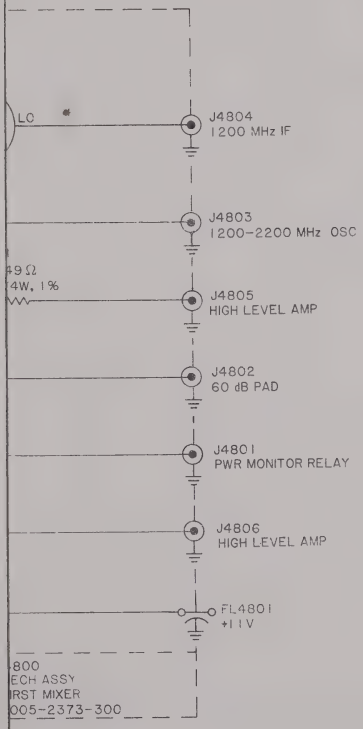

Figure 6-32. First mixer A1A19, schematic diagram.

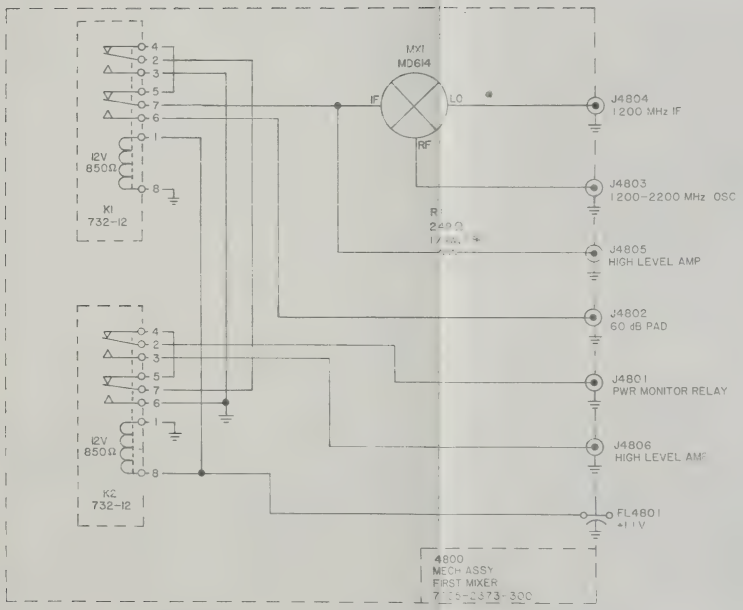

Figure 6-32. First mixer A1A19, schematic diagram.

DRAFTSMAN NOTES:

ON SHT 1 J4801 BECOMES A1A19J1

J4802	A1A19J2
J4803	A1A19J3
J4804	A1A19J4
J4805	A1A19J5
J4806	A1A19J6
FL4801	A1A19FL1

NOTES:

1. LAST REF NO USED:
   A1A19FL1
   J6
   K2
   MX1
   R1

2. ALL REF NO'S CARRY AN ASSIGNED DESIGNATOR SERIES (e.g. THIS SCHEMATIC CARRIES SERIES A1A19; THEREFORE R1 IS DESIGNATED A1A19R1).

A1A19
FIRST MIXER, MECH ASSY
7005-2373-300

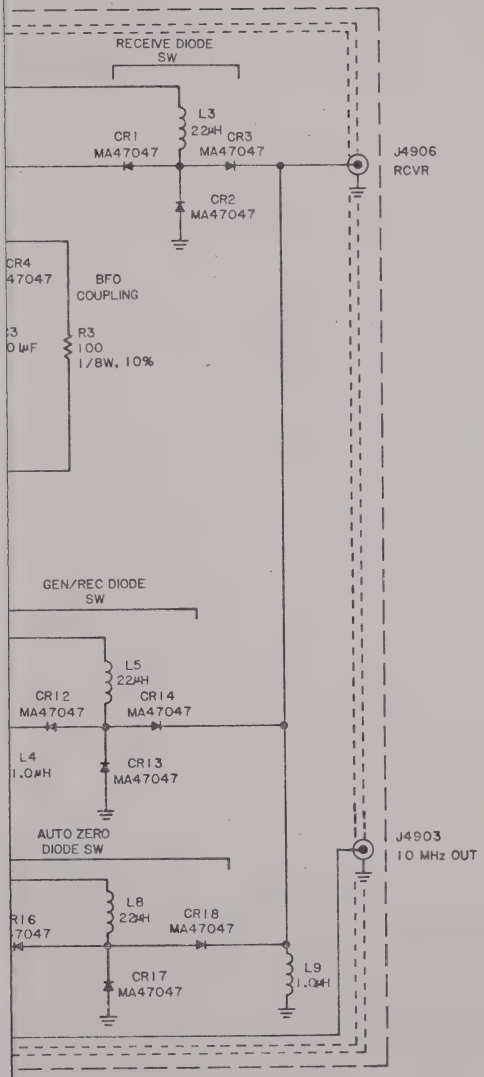

Figure 6-33. Second mixer A1A20, schematic diagram.

NOTES:

1. LAST REF NO USED.
   A1A20C8
   CR18
   E4
   FL5
   GI
   J8
   L9
   MX1
   R15
2. ALL RESISTORS ARE 1/4W, 10% UNLESS OTHERWISE NOTED.
3. ALL RESISTANCE IS EXPRESSED IN OHMS UNLESS OTHERWISE NOTED.
4. ALL CAPACITANCE IS EXPRESSED IN PICOFARADS UNLESS OTHERWISE NOTED.
5. ALL REF NO'S CARRY AN ASSIGNED DESIGNATOR SERIES (e.g. THIS SCHEMATIC CARRIES SERIES A1A20 THEREFORE R1 IS DESIGNATED A1A20R1).

DRAFTSMAN NOTES:

SHT 1 J4901 BECOMES	A1A20J1
J4902	A1A20J2
J4903	A1A20J3
J4904	A1A20J4
J4905	A1A20J5
J4906	A1A20J6
J4907	A1A20J7
J4908	A1A20J8
FL4901	A1A20FL1
FL4902	A1A20FL2
FL4903	A1A20FL3
FL4904	A1A20FL4
FL4905	A1A20FL5

A1A20
SECOND MIXER ASSY
7017-2346-200

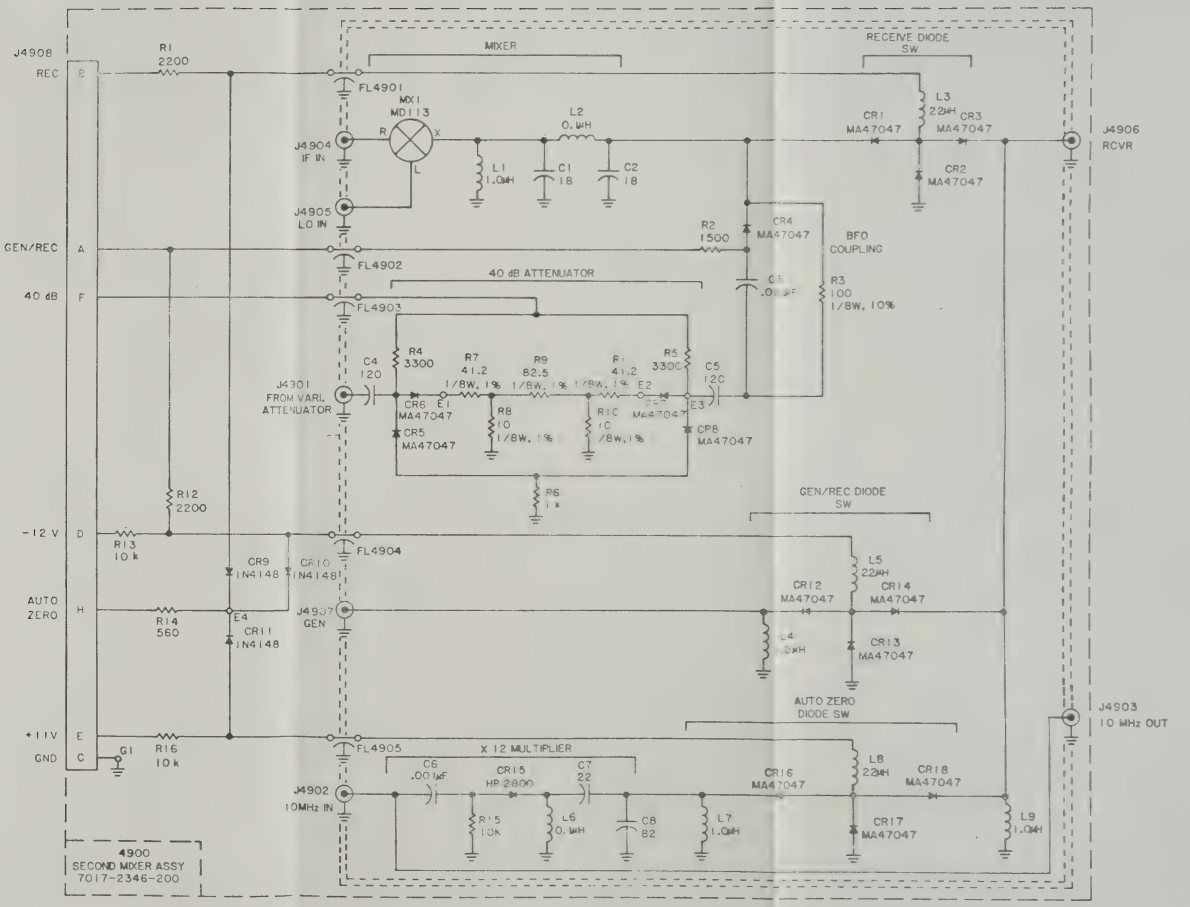

Figure 6-33. Second mixer A1A20, schematic diagram.

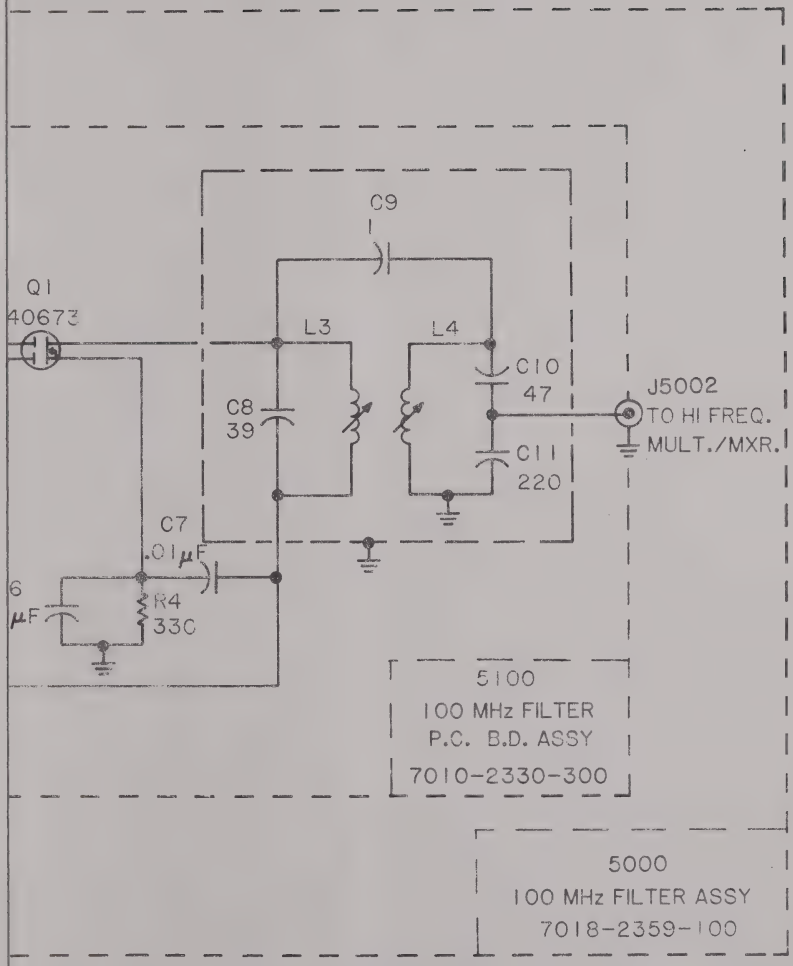

Figure 6-34. 100 MHz filter A1A21, schematic diagram.

NOTES:

1. LAST REF NO USED:
   A1A21FL1
   A1A21A1C12
   A1A21A1E1
   A1A21A1G1
   A1A21A1J2
   A1A21A1L5
   A1A21A1Q1
   A1A21A1R4
2. ALL RESISTORS ARE 1/4 W, 10% UNLESS OTHERWISE NOTED.
3. ALL RESISTANCE IS EXPRESSED IN OHMS UNLESS OTHERWISE NOTED.
4. ALL CAPACITANCE IS EXPRESSED IN PICOFARADS UNLESS OTHERWISE NOTED.
5. ALL INDUCTORS ARE SK618-2 UNLESS OTHERWISE NOTED.
6. ALL REF. NO'S CARRY ON ASSIGNED DESIGN [illegible] CARRIES SERIES A1A21, A1A21A1; THEREFORE, R1 IS DESIGNATED A1A21A1R1).

DRAFTSMAN NOTE:

ON SHT 1 J5001 BECOMES A1A21A1J1
J5002 A1A21A1J2
FL5001 A1A21FL1

A1A21
100 MHz FILTER ASSY FM
7018-2359-100

A1A21A1
100 MHz FILTER P.C.BD.
ASSY FM
7010-2330-300

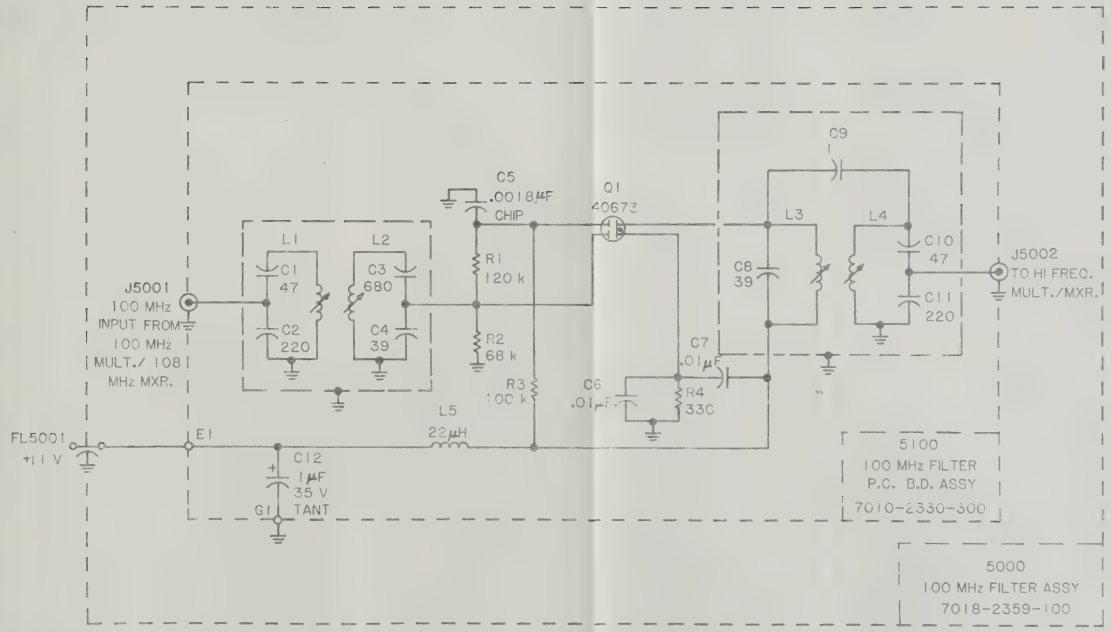

Figure 6-34. 100 MHz filter A1A21, schematic diagram.

Figure 6-35. Battery, modified A1A23, schematic diagram.

NOTES:

1. LAST REF NO USED:
   A1A23BT1
   P1
2. ALL REF NO'S CARRY AN ASSIGNED DESIGNATOR SERIES (e.g. THIS SCHEMATIC SERIES A1A23; THEREFORE BT1 IS DESIGNATED A1A23BT1 AND P5301 BECOMES A1A23P1).

A1A23
MECH ASSY BATTERY MODIFIED
7005-7624-500

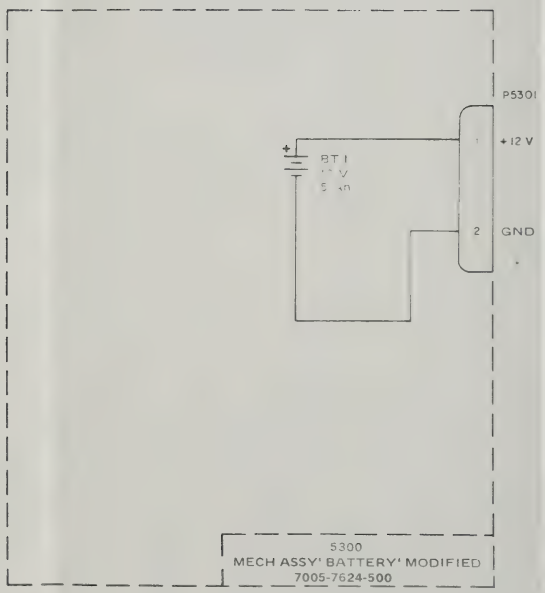

Figure 6-35. Battery, modified A1A23, schematic diagram.

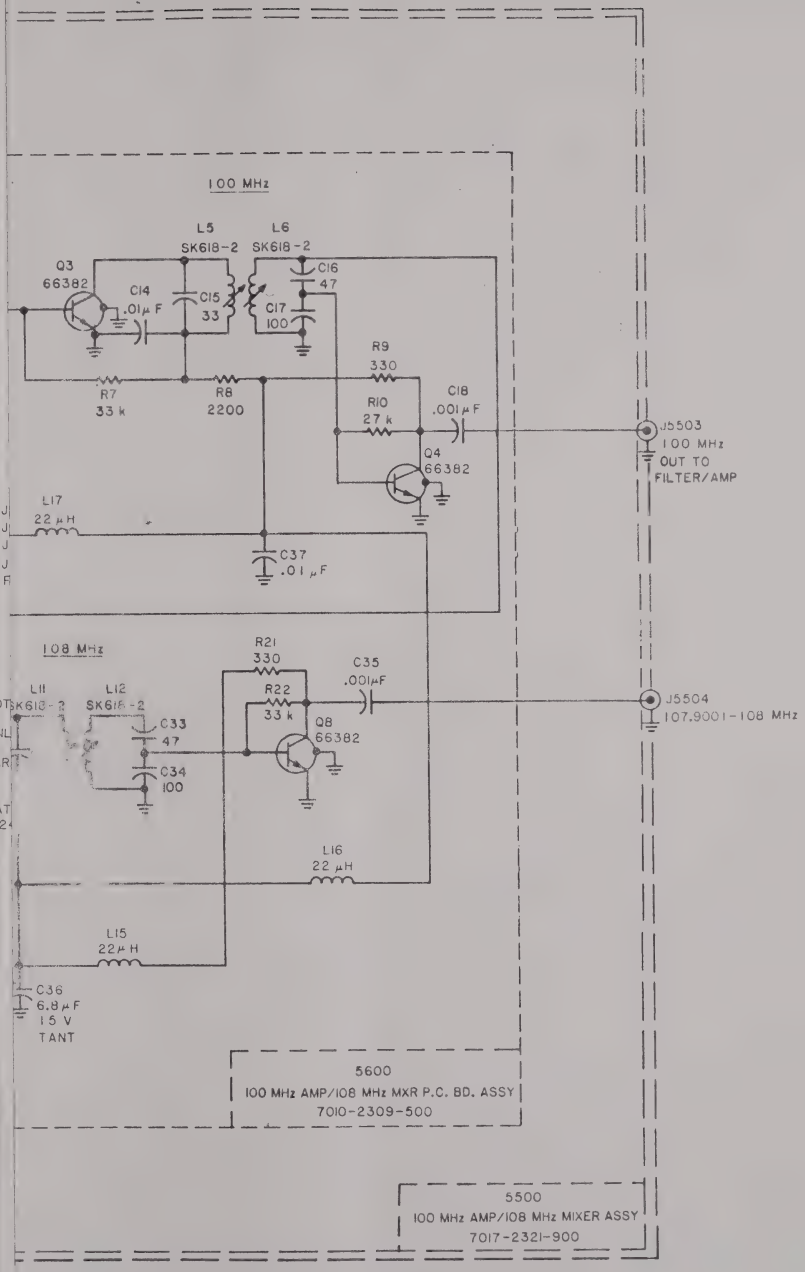

Figure 6-36. 100 MHz amplifier/108 MHz mixer A1A24A1, schematic diagram.

DRAFTSMAN NOTES:

ON SHT 1 J5501 BECOMES A1A24AIJ1
J5502 A1A24AIJ2
J5503 A1A24AIJ3
J5504 A1A24AIJ4
FL5501 A1A24AIFL1

NOTES:

1. LAST REF NO USED:
   A1A24AIFL1
   J4
   A1A24A1A1C37
   E1
   LI8
   Q8
   R22

2. ALL RESISTORS ARE 1/4 W, 10% UNLESS OTHERWISE NOTED.

3. ALL RESISTANCE IS EXPRESSED IN OHMS UNLESS OTHERWISE NOTED.

4. ALL CAPACITANCE IS EXPRESSED IN PICOFARADS UNLESS OTHERWISE NOTED.

5. ALL REF NO'S CARRY AN ASSIGNED DESIGNATOR SERIES (e.g. THIS SCHEMATIC CARRIES SERIES A1A24A1 & A1A24A1A1; THEREFORE, R1 IS DESIGNATED A1A24A1A1R1).

A1A24A1
100 MHz AMP/108 MHz MIXER ASSY
7017-2321-900

A1A24A1A1
100 MHz AMP/108 MHz MXR P.C. BD. ASSY
7010-2309-500

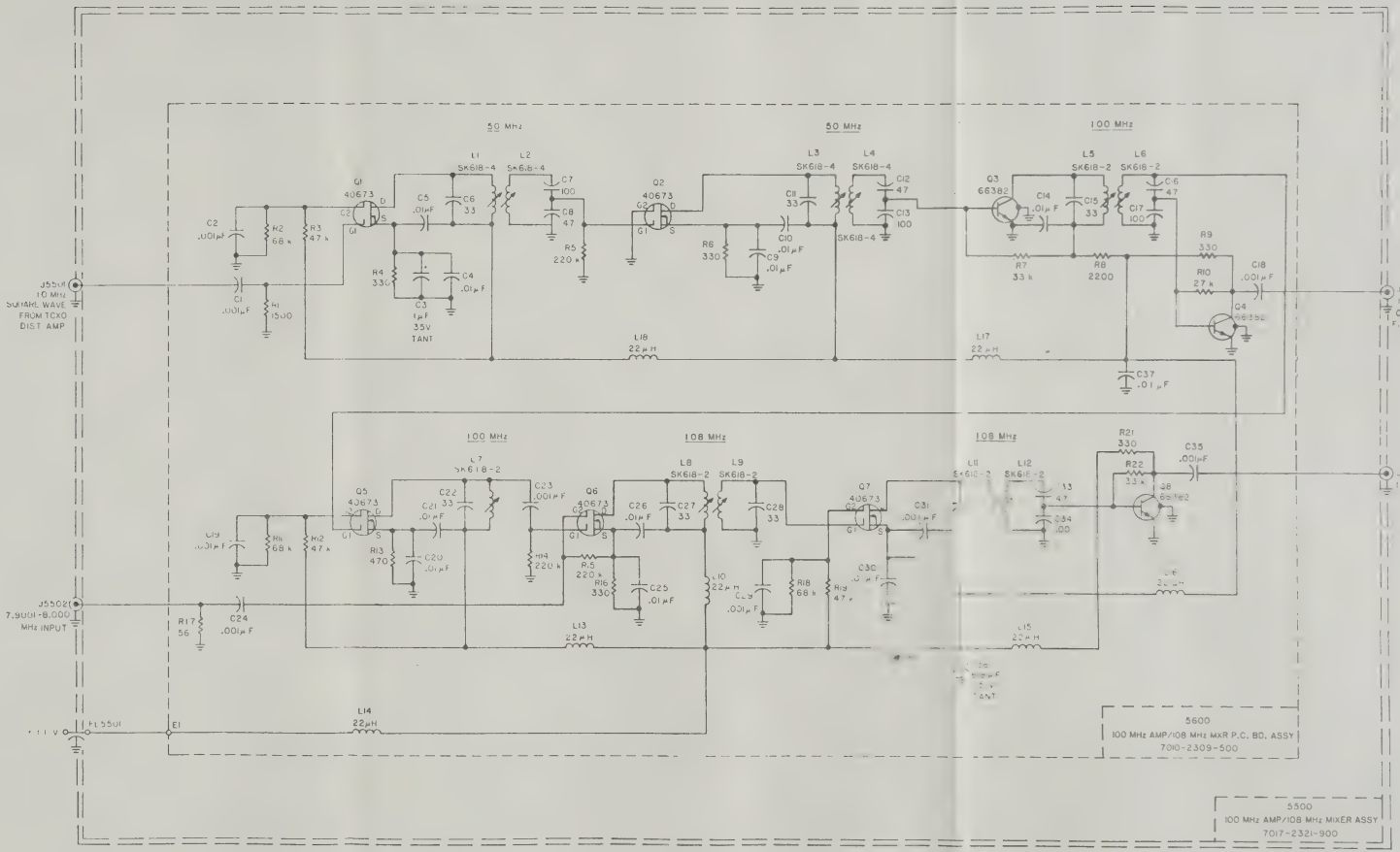

Figure 6-36. 100 MHz amplifier/108 MHz mixer A1A24A1, schematic diagram.

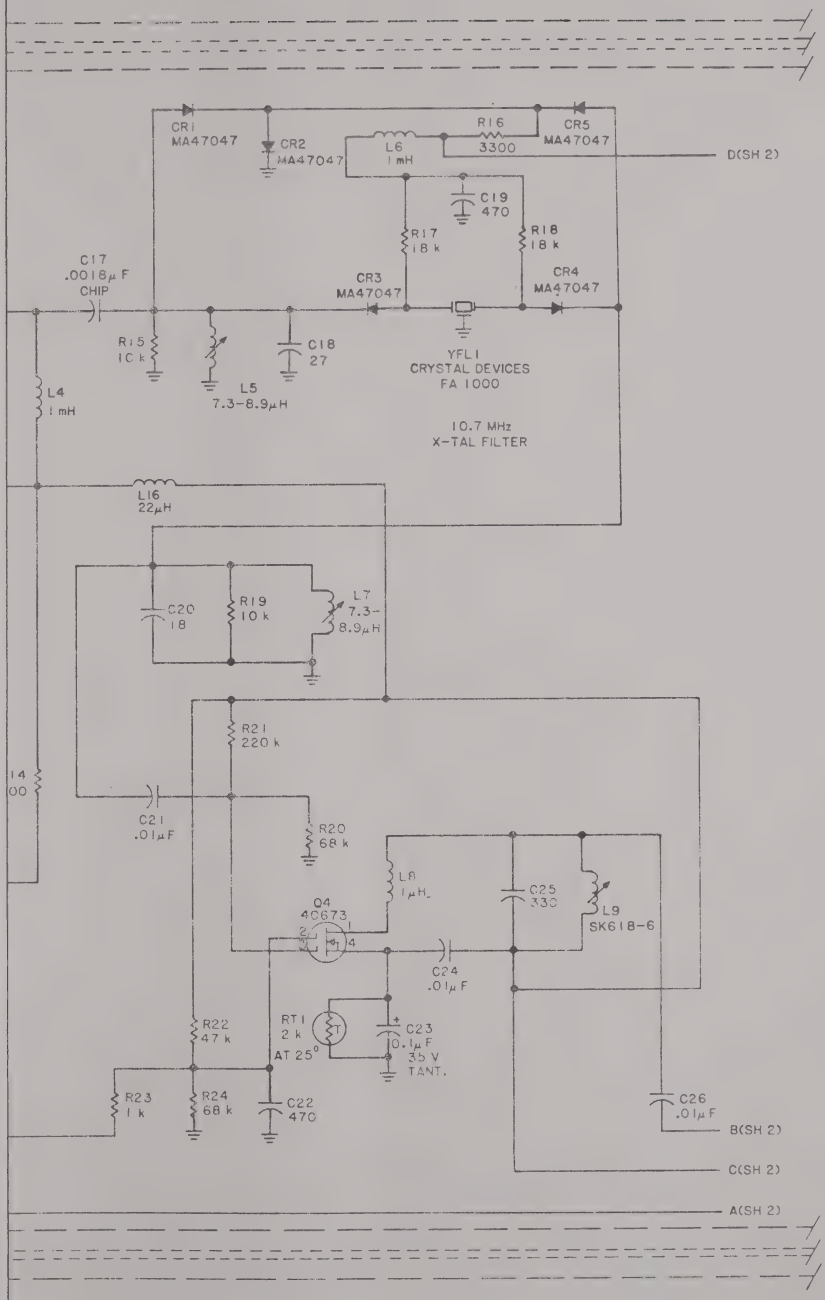

Figure 6-37. 120 MHz receiver A1A24A2, schematic diagram (sheet 1 of 2).

DRAFTSMAN NOTE:

ON SHT 1 J5701 BECOMES	A1A24A2J1
ON SHT 1 J5702	A1A24A2J2
ON SHT 1 P5703	A1A24A2P3

A1A24A2
120 MHz RECEIVER ASSY
7027-2348-300

A1A24A2A1
120 MHz RECEIVER P. C. BD. ASSY
7010-2348-200

NOTES:

1. LAST REF.NO. USED:
   - A1A24A2C1
   - FL3
   - J2
   - P3
   - A1A24A2A1C41
   - CR6
   - E2
   - L18
   - Q10
   - R44
   - RT2
   - Y2
   - YFL1
2. REF NO. NOT USED A1A24A2A1R36
3. ALL RESISTORS ARE 1/4 W, 10% UNLESS OTHERWISE NOTED.
4. ALL RESISTANCE IS EXPRESSED IN OHMS UNLESS OTHERWISE NOTED.
5. ALL CAPACITANCE IS EXPRESSED IN PICOFARADS UNLESS OTHERWISE NOTED.
6. ALL REF. NO'S CARRY AN ASSIGNED DESIGNATOR SERIES (e.g. THIS SCHEMATIC CARRIES SERIES A1A24A2 & A1A24A2A1: THEREFORE R1 IS DESIGNATED A1A24A2A1R1).

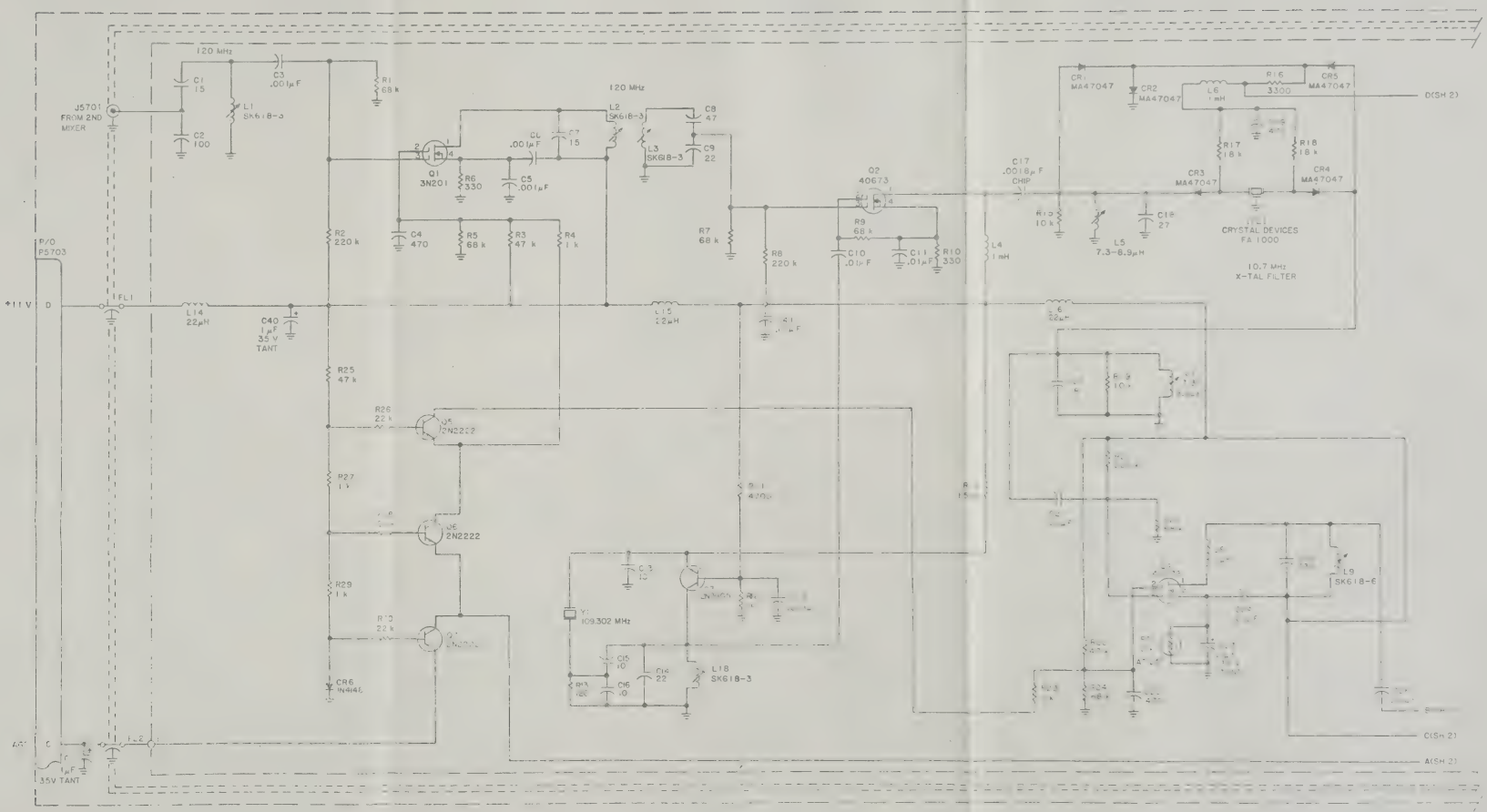

Figure 6-37. 120 MHz receiver A1A24A2, schematic diagram (sheet 1 of 2).

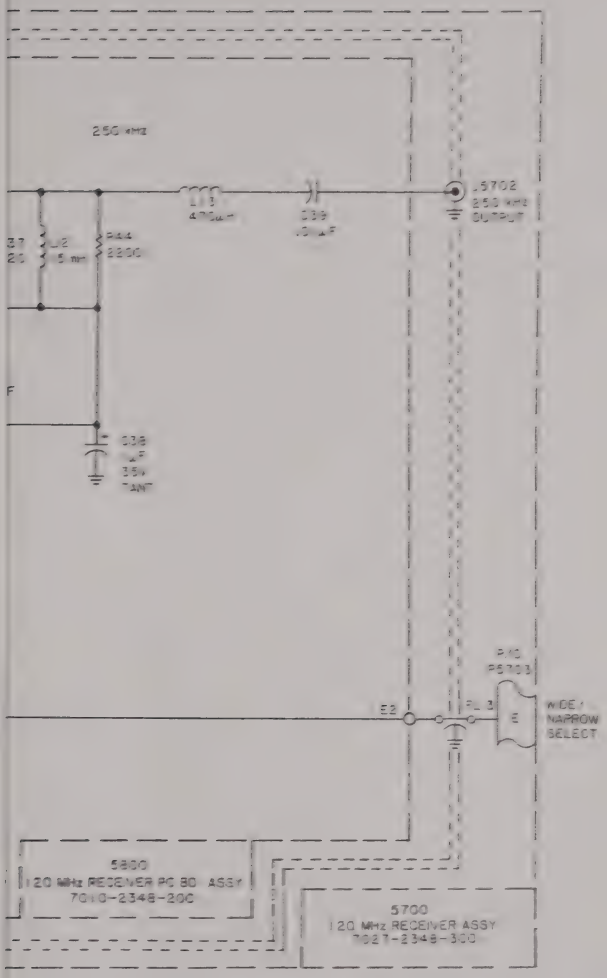

Figure 6-37. 120 MHz receiver A1A24A2, schematic diagram (sheet 2 of 2).

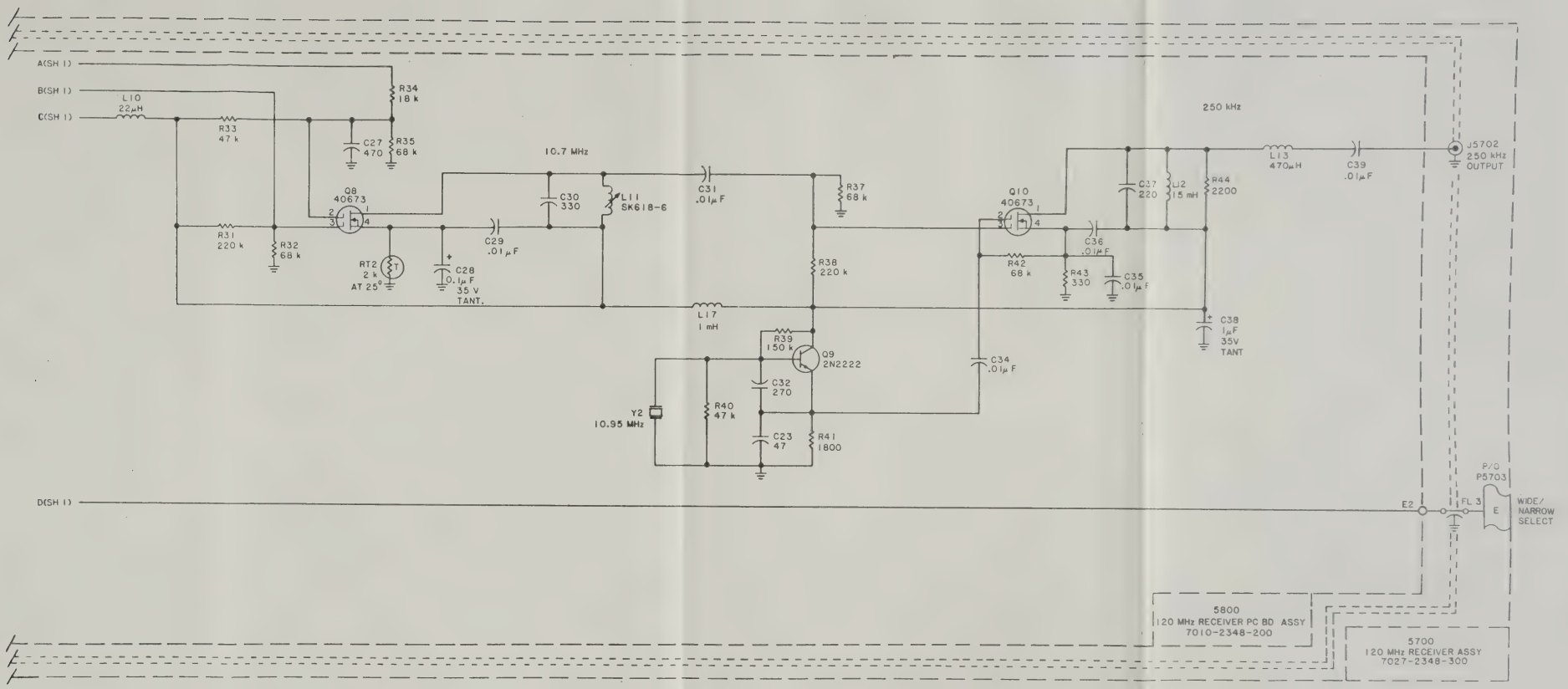

Figure 6-37. 120 MHz receiver A1A24A2, schematic diagram (sheet 2 of 2).

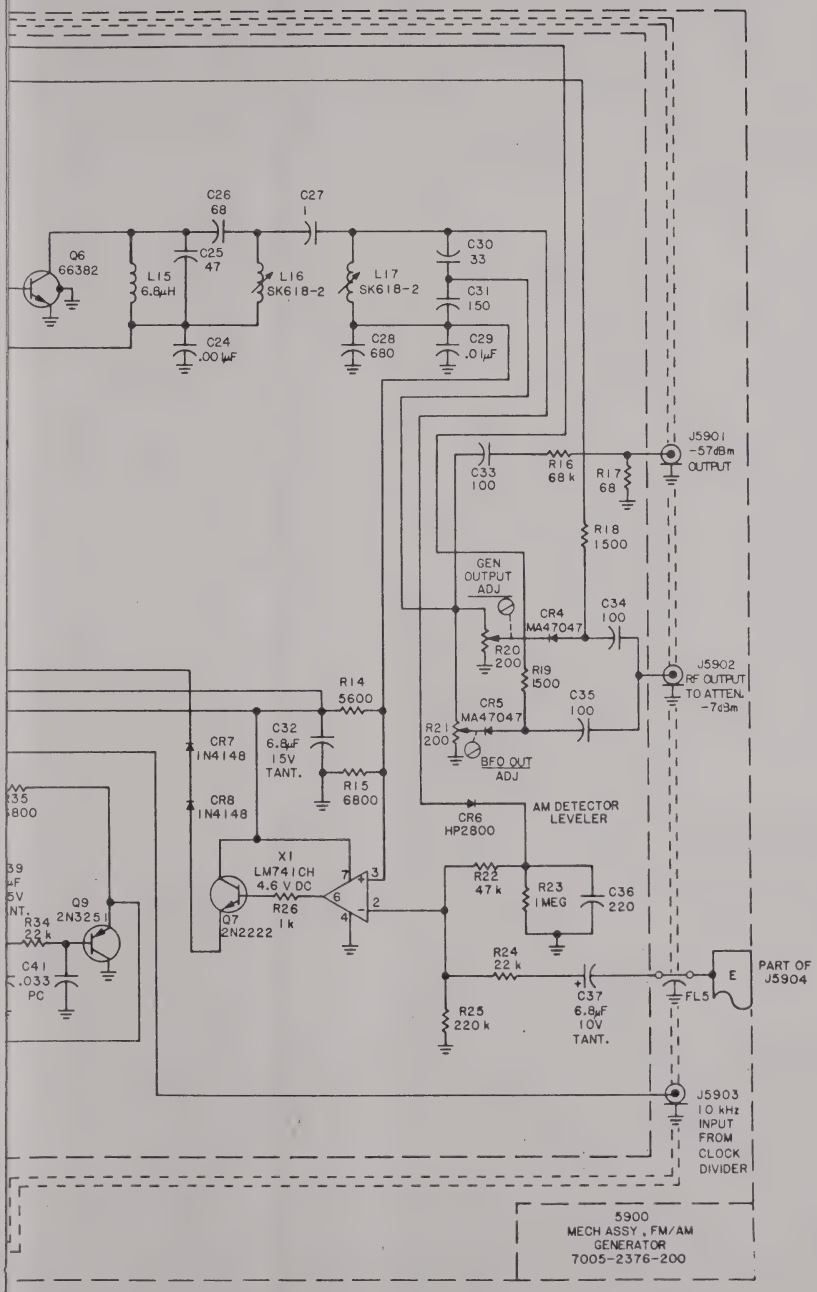

Figure 6-38. FM/AM generator A1A24A3, schematic diagram.

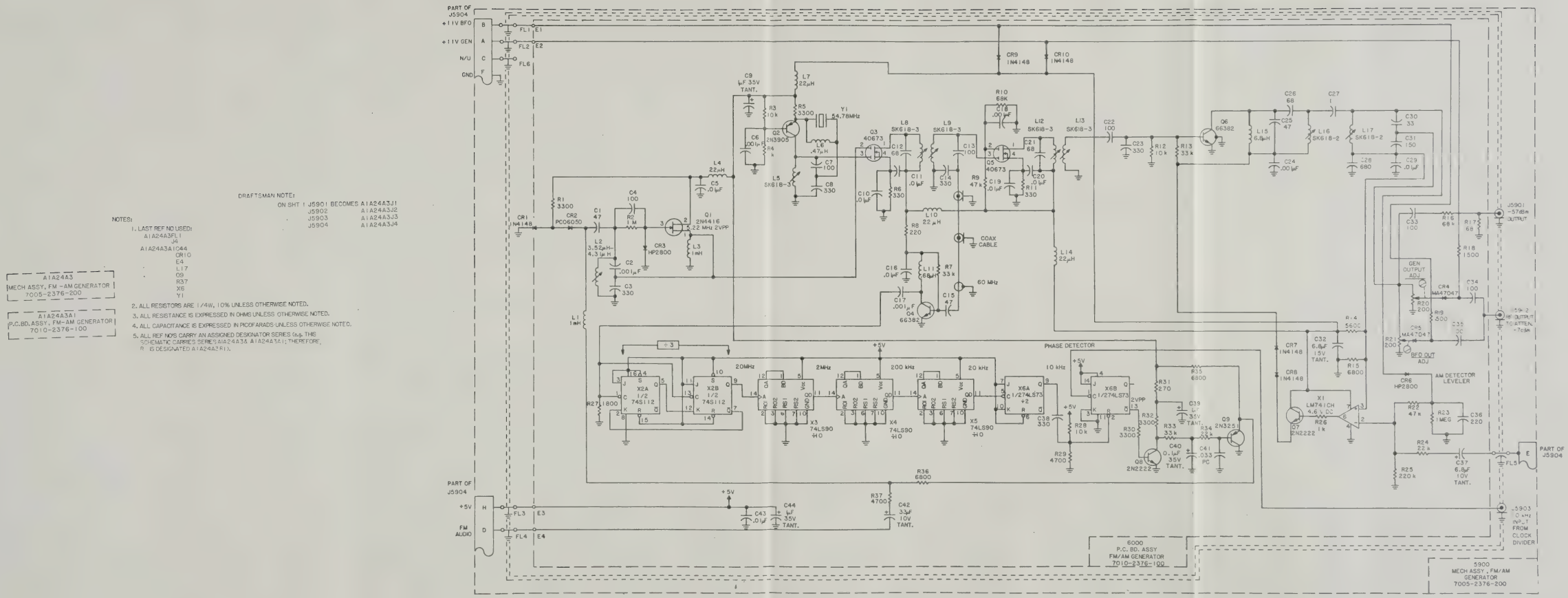

Figure 6-38. FM/AM generator A1A24A3, schematic diagram.

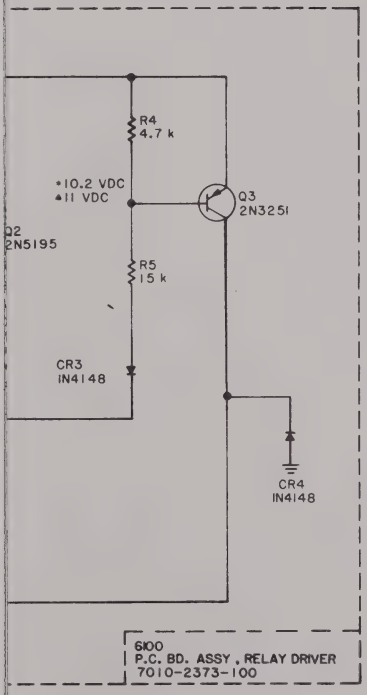

Figure 6-39. Relay driver A1A25, schematic diagram.

DRAFTSMAN'S NOTE:

J6101 BECOMES A1A25J1

NOTES:

1. LAST REF NO USED:
   A1A25
   CR4
   J1
   Q3
   R5
2. ALL RESISTORS ARE 1/8W, 10%
3. ALL RESISTANCE EXPRESSED IN OHMS UNLESS OTHERWISE NOTED.
4. TEST VOLTAGE VALUE LEGEND:
   * GEN
   ▲ REC
   ● HI LEVEL
5. ALL REF NO'S CARRY AN ASSIGNED DESIGNATOR SERIES (e.g. THIS SCHEMATIC CARRIES SERIES A1A25 THEREFORE R1 IS DESIGNATED A1A25R1).

A1A25
P.C. B.D. ASSY, RELAY DRIVER
7010-2373-100

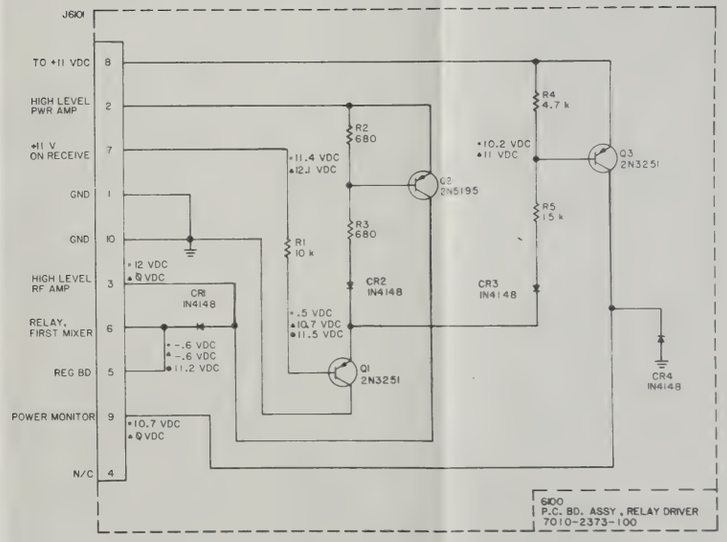

Figure 6-39. Relay driver A1A25, schematic diagram.

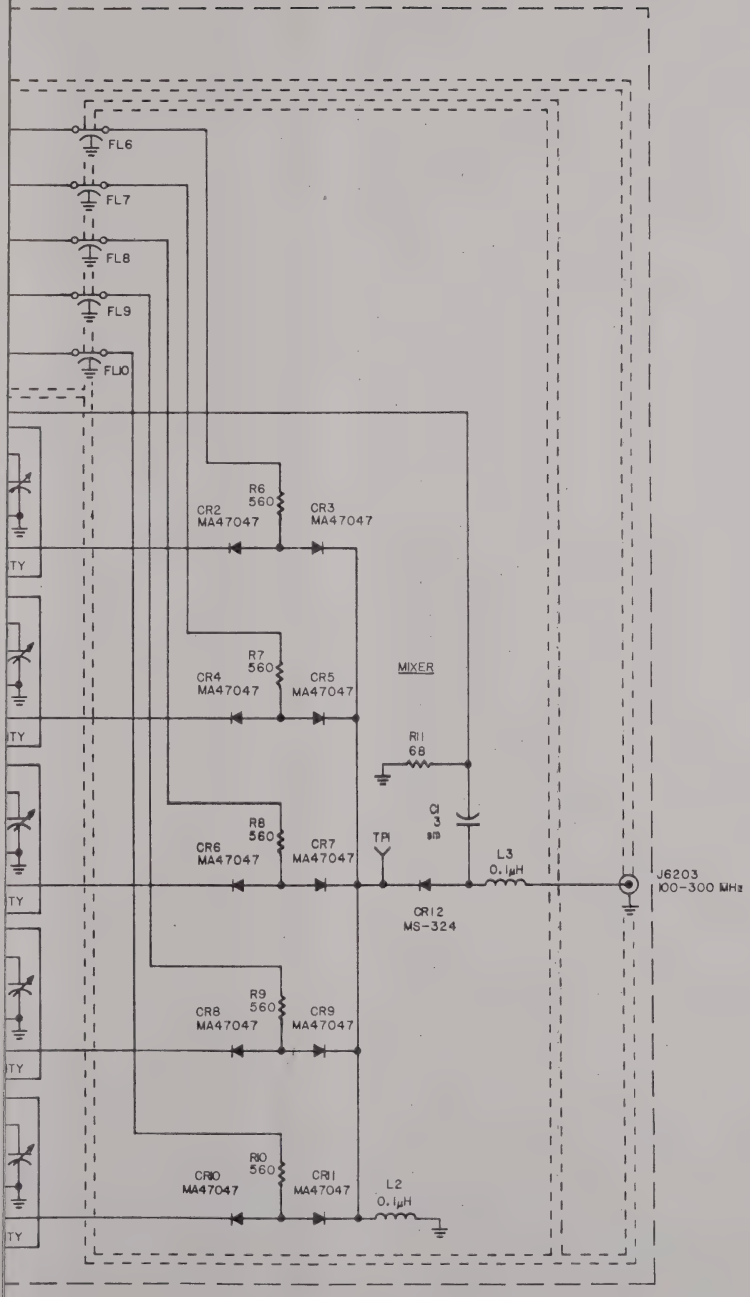

Figure 6-40. High frequency multiplier/mixer A1A26, schematic diagram.

DRAFTSMAN NOTES:

ON SHT 1 J6201 BECOMES A1A26J1

J6202	A1A26J2
J6203	A1A26J3
J6204	A1A26J4
E6301	A1A26A1E1

NOTES:

1. LAST REF NO USED:
   A1A26C1
   CR12
   FL10
   J4
   R6
   TU10
   A1A26A1C10
   CR2
   E1
   FL1
   L5
   Q2
   R8

A1A26
HI FREQ MULTI MIXER BLK ASSY
7015-2309-700

2. ALL RESISTORS ARE 1/4 W, 10% UNLESS OTHERWISE NOTED.
3. ALL RESISTANCE IS EXPRESSED IN OHMS UNLESS OTHERWISE NOTED.
4. ALL CAPACITANCE IS EXPRESSED IN PICOFARADS UNLESS OTHERWISE NOTED.
5. TRIM WHEN NECESSARY.
6. ALL REF NO'S CARRY AN ASSIGNED DESIGNATOR SERIES (e.g. THIS SCHEMATIC CARRIES SERIES A1A26 & A1A26A1; THEREFORE, R1 IS DESIGNATED A1A26R1).

A1A26A1
HI FREQ MULTI MIXER AMP BD ASSY
7010-2310-100

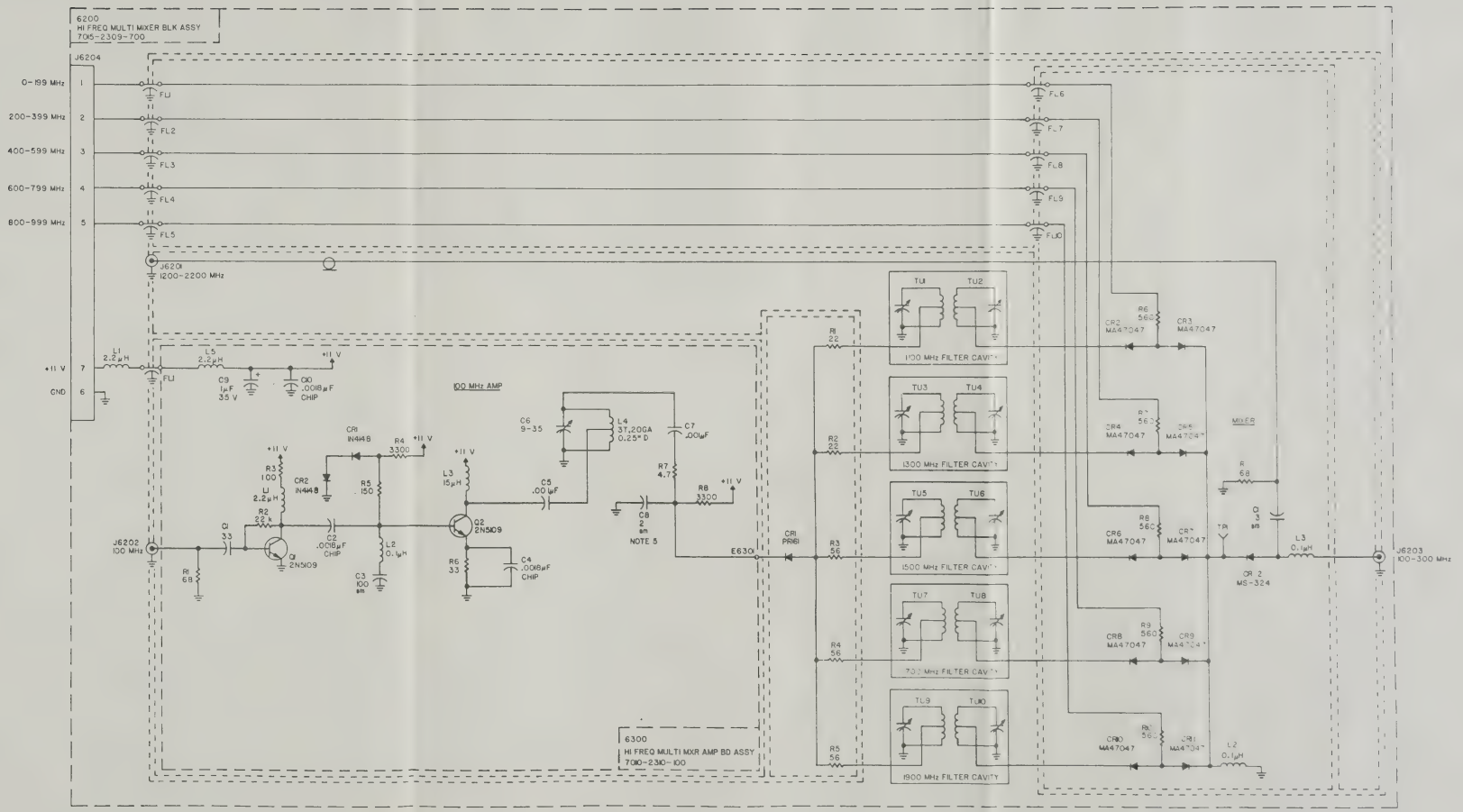

Figure 6-40. High frequency multiplier/mixer A1A26, schematic diagram.

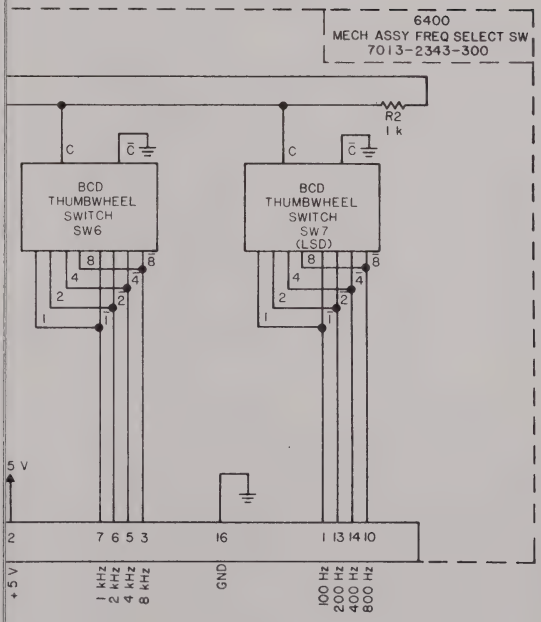

Figure 6-41. Frequency select switch A1A27, schematic diagram.

NOTES:

1. LAST REF. NO.USED:
   A1A27J2
   R2
   SW7
2. ALL RESISTORS ARE 1/4 W, 10%
3. ALL REF. NO'S. CARRY AN ASSIGNED SERIES (e.g. THIS SCHEMATIC CARRIES SERIES A1A27; THEREFORE, R1 IS DESIGNATED A1A27R1).

DRAFTSMAN NOTES:

ON SHT 1 J6401 BECOMES A1A27J1
J6402 A1A27J2

A1A27
MECH ASSY, FREQ SELECT SW
7013-2343-300

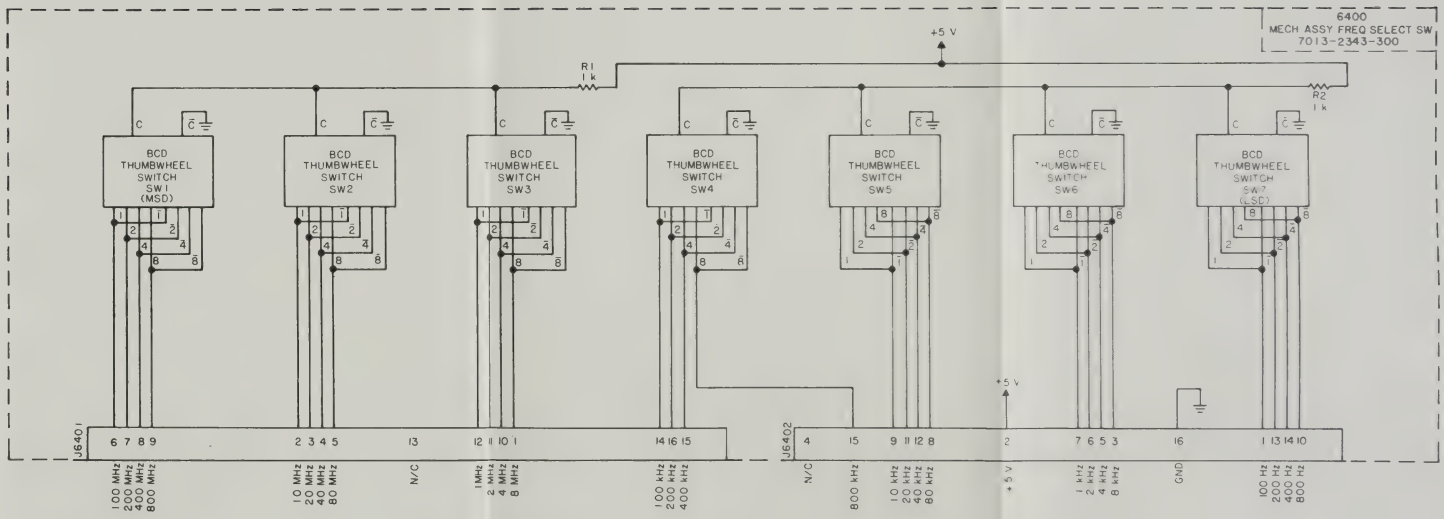

Figure 6-41. Frequency select switch A1A27, schematic diagram.

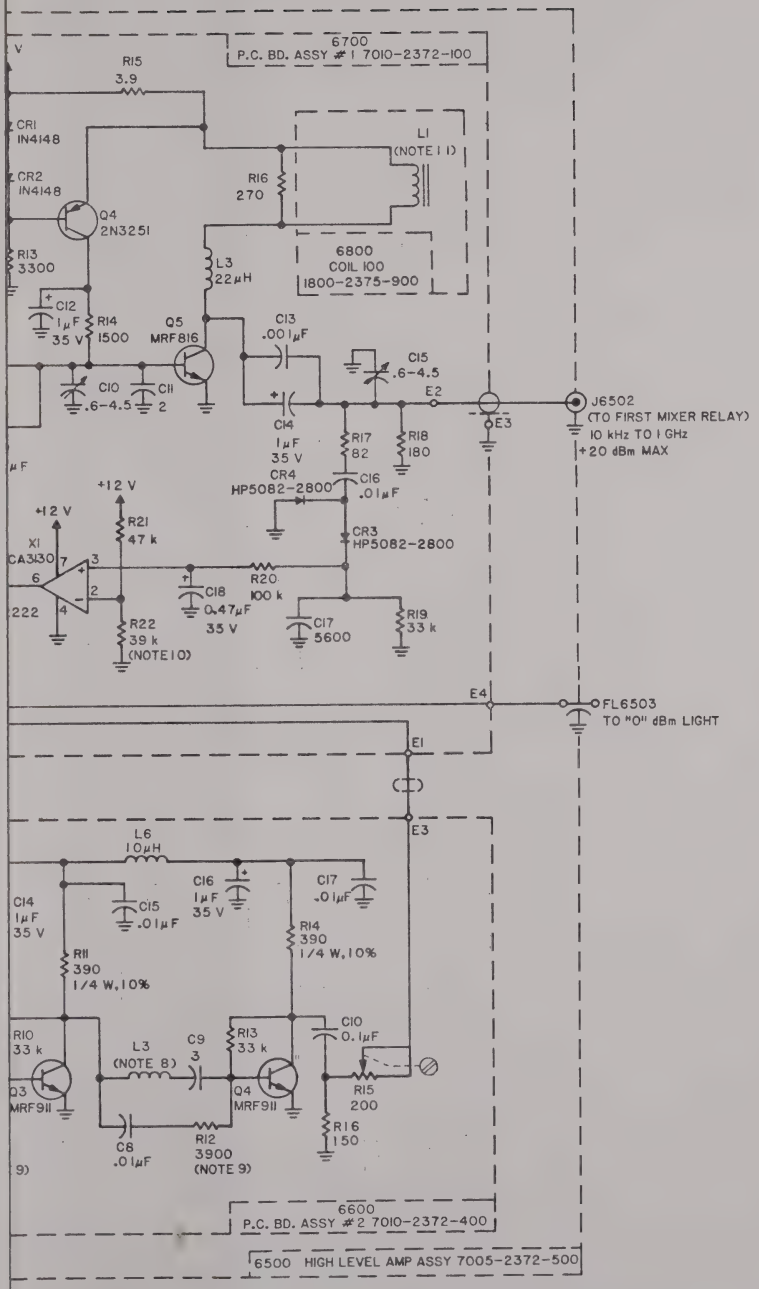

Figure 6-42. High level amplifier A1A28, schematic diagram.

NOTES:

1. LAST REF NO USED:
   A1A28FL3
   A1A28J2
   A1A28AIC17
   A1A28AIE4
   A1A28AIL6
   A1A28AIQ4
   A1A28AIR16
   A1A28A2C24
   A1A28A2CR4
   A1A28A2E4
   A1A28A2L5
   A1A28A2Q6
   A1A28A2R23
   A1A28A2XI
   A1A28A2L1
2. ALL RESISTORS ARE 1/8 W, 10% UNLESS OTHERWISE NOTED.
3. ALL RESISTANCE IS EXPRESSED IN OHMS UNLESS OTHERWISE NOTED.
4. ALL CAPACITANCE IS EXPRESSED IN PICOFARADS UNLESS OTHERWISE NOTED.
5. ALL POLARIZED CAPACITORS ARE TANTALUM.
6. ALL .01 μF CAPACITORS ARE DISC.
7. ALL CAPACITORS LESS THAN .01 μF ARE NPO.
8. NOTED INDUCTORS ARE FORMED BY THE STRAY INDUCTANCE FROM CAPACITOR LEAD 0.6" LONG.(TYP 3 PLCS).C5, C7, C9
9. R9 AND R12 ON P.C. BD. #2 ARE SET AT TEST (S.A.T.) RESISTORS. NOMINAL VALUE INSTALLED IS 3.9 k.
   SELECT RANGE: 1500 TO 3900 1/8 W, 10%
   4701-0152-003-1500
   4701-0182-003-1800
   4701-0222-003-2200
   4701-0272-003-2700
   4701-0332-003-3300
   4701-0392-000-3900
   A1A28A1R9 AND A1A28A1R12 ARE SELECTED TO FREQUENCY RESPONSE.

DRAFTSMAN NOTES:

ON SH 1 J6501 BECOMES A1A28J1

J6502	A1A28J2
FL6501	A1A28FL1
FL6502	A1A28FL2
FL6503	A1A28FL3

10. R22 ON P.C. BD. #1 IS A SET AT TEST (S.A.T.) RESISTOR.
    NOMINAL VALUE INSTALLED IS 39 k, 1/8 W, 10%
    SELECT RANGE: 39 k OR 33 k, 1/8 W, 10%
    4701-0393-003-39 k
    4701-0333-003-33 k
    R22 IS SELECTED FOR THE "O" dBm INDICATOR LIGHT ADJUSTMENT.
11. A1A28A2A1L1 INDUCTANCE VALUE: 3.0 mH ± 25% MEASURED AT 1 kHz SERIES CIRCUIT/OR EQUIVALENT.
12. ALL REF NO'S CARRY AN ASSIGNED DESIGNATOR SERIES (e.g. THIS SCHEMATIC CARRIES SERIES A1A28, A1A28A1, A1A28A2. A1A28A3; THEREFORE, R1 IS DESIGNATED A1A28A2R1).

A1A28A2
P.C. BD. ASSY #1
7010-2372-100

A1A28A3
COIL 100
1800-2375-900

A1A28A1
P.C. BD. ASSY #2
7010-2372-400

A1A28
HIGH LEVEL AMP ASSY
7005-2372-500

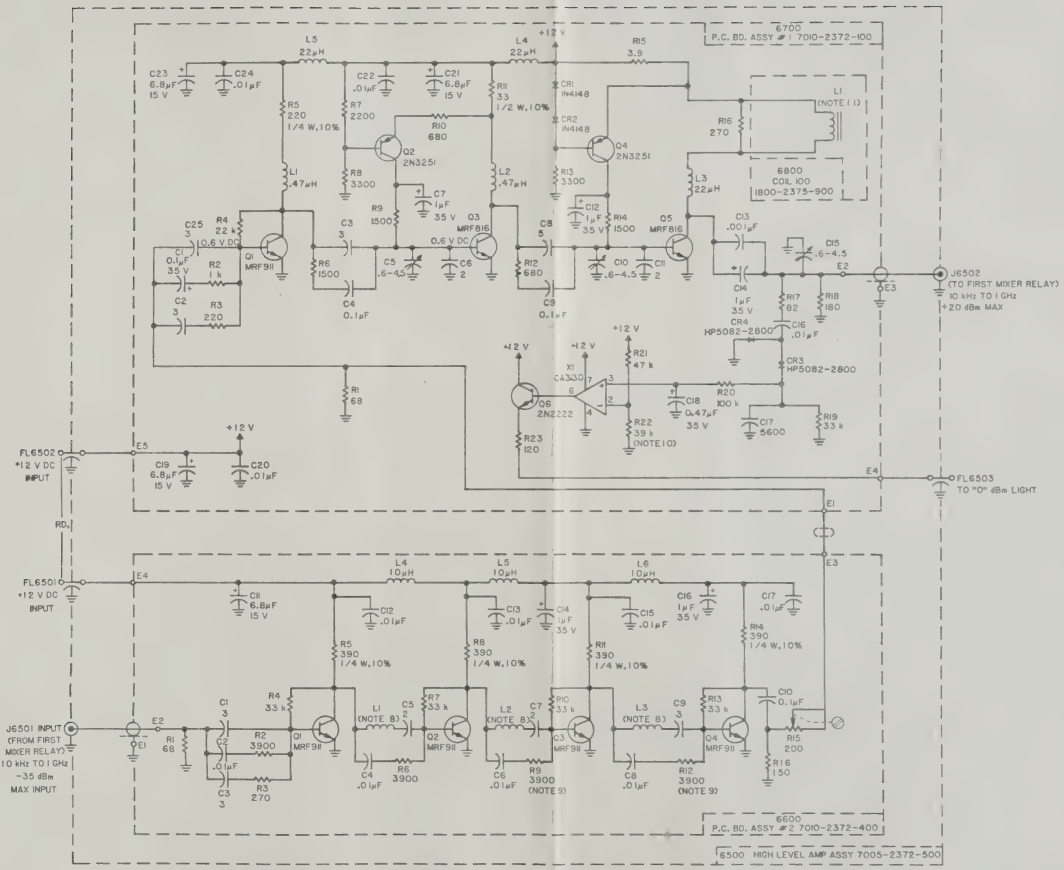

Figure 6-42. High level amplifier A1A28, schematic diagram.

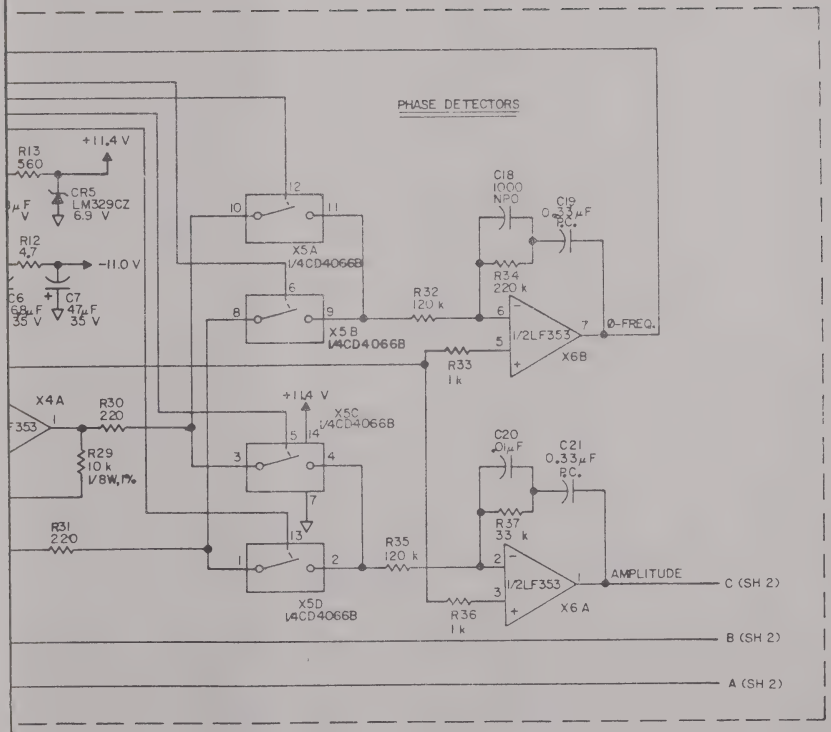

Figure 6-43. MM-100 assembly A2A1, schematic diagram (sheet 1 of 3).

NOTES:

1. LAST REF NO. USED:

A2A1A1C49	A2A1A1Q4	A1A1P12	A2A1A2P4
CR13	R120	A2A1A2C1	R16
E4	T2	F1	SP1
J2	U3	J4	SW2
P2	X15	M1	

2. REF DES NOT USED:
A2A1A2J3
A2A1A2R3
A2A1A2R8

3. ALL RESISTORS ARE 1/4 W, 10% UNLESS OTHERWISE NOTED.

4. ALL RESISTANCE IS EXPRESSED IN OHMS UNLESS OTHERWISE NOTED.

5. ALL CAPACITANCE IS EXPRESSED IN PICOFARADS UNLESS OTHERWISE NOTED.

6. A2A1A2J2 IS INSULATED FROM THE FRONT PANEL.

7. DEFINITION OF SPECIAL PURPOSE SYMBOLS:

FLOATING GROUND

FLOATING GROUND WILL BE ELECTRICALLY ISOLATED FROM FM/AM-100S GROUND (REF FM/AM-100OS GROUND ⏚).

(P.C. BD.) A2A1A2P4 ⟫ A2A1A2J4 (FRONT PANEL)
A2A1A2J4/P4 IS A SINGLE PIN CONTACT.

(P.C. BD.) P1-9 ⟫ J1-9 (FRONT PANEL)
SINGLE SET OF CONTACTS PART OF MULTIPLE CONTACT CONNECTOR.

8. REFERENCE

P.C. BD.	1700-2380-200
P.C. BD. ASSY	7010-2380-300
FRONT PANEL ASSY	7005-2380-4XX
MM-100 COMPOSITE	7003-2380-000

9. ALL LF353'S HAVE THE FOLLOWING CONNECTIONS THAT ARE NOT SHOWN.
8(V+) IS CONNECTED TO +11.4V
4(V-) IS CONNECTED TO -11.0V

10. ALL CIRCUITRY OUTSIDE OF THE BOLD DASHED LINE IS MOUNTED ON THE FRONT PANEL NO. 7005-2380-400 AND CARRIES REFFRENCE DESIGNATOR SERIES A2A1A2. THEREFORE, R1 IS DESIGNATED A2A1A2R1.

11. PC BD ASSY NO. 7010-2380-300 CARRIES REFERENCE DESIGNATOR SERIES A2A1A1, THEREFORE, R1 IS DESIGNATED A2A1A1R1.

DRAFTSMAN'S NOTE

P/O 7010-2380-300
PC BD ASSY, MM-100
A2A1A1

P212	BECOMES	A2A1P12
C7301		A2A1A2C1
J7301		A2A1A2J1
S7301A THRU S7301C		A2A1A2S1A THRU A2A1A2S1C
S7302A THRU S73020		A2A1A2S2A THRU A2A1A2S2D
R7301 THRU R7316		A2A1A2R1 THRU A2A1A2R17
P7304		A2A1A2P4
J7304		A2A1A2J4
F7301		A2A1A2F1
SP7301		A2A1A2SP1
M7301		A2A1A2M1
J7302		A2A1A2J2

(8) TO S73018 BECOMES
(8) TO A2A1A2S18

VOLUME R7309 10k BECOMES VOLUME A2A1A2R9 10k

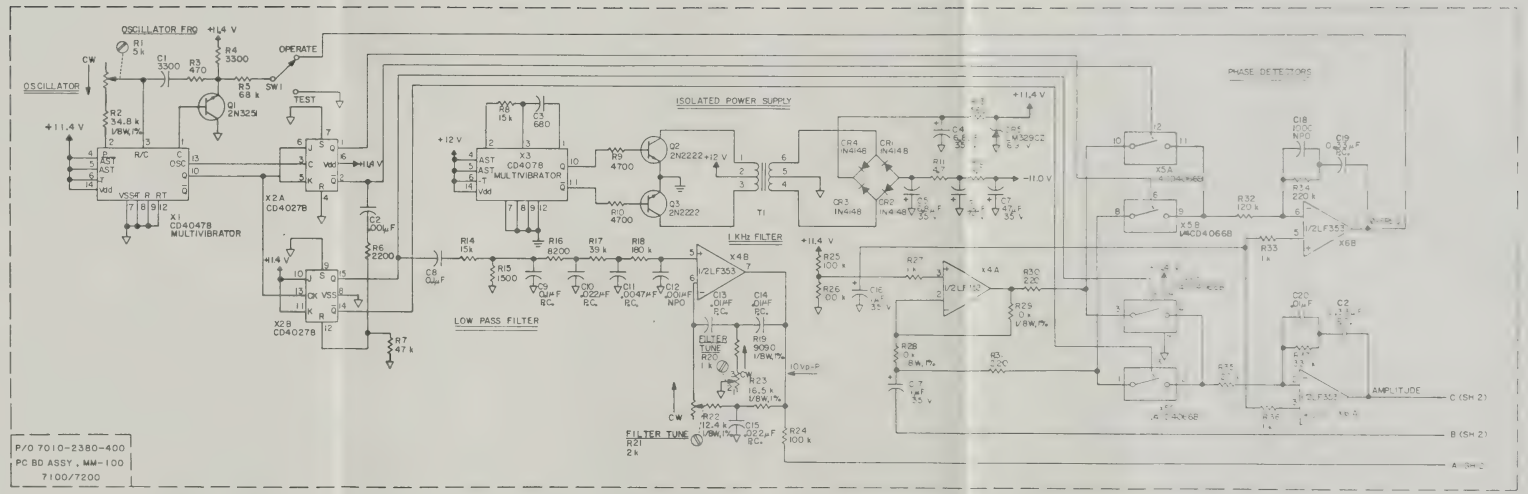

Figure 6-43. MM-100 assembly A2A1, schematic diagram (sheet 1 of 3).

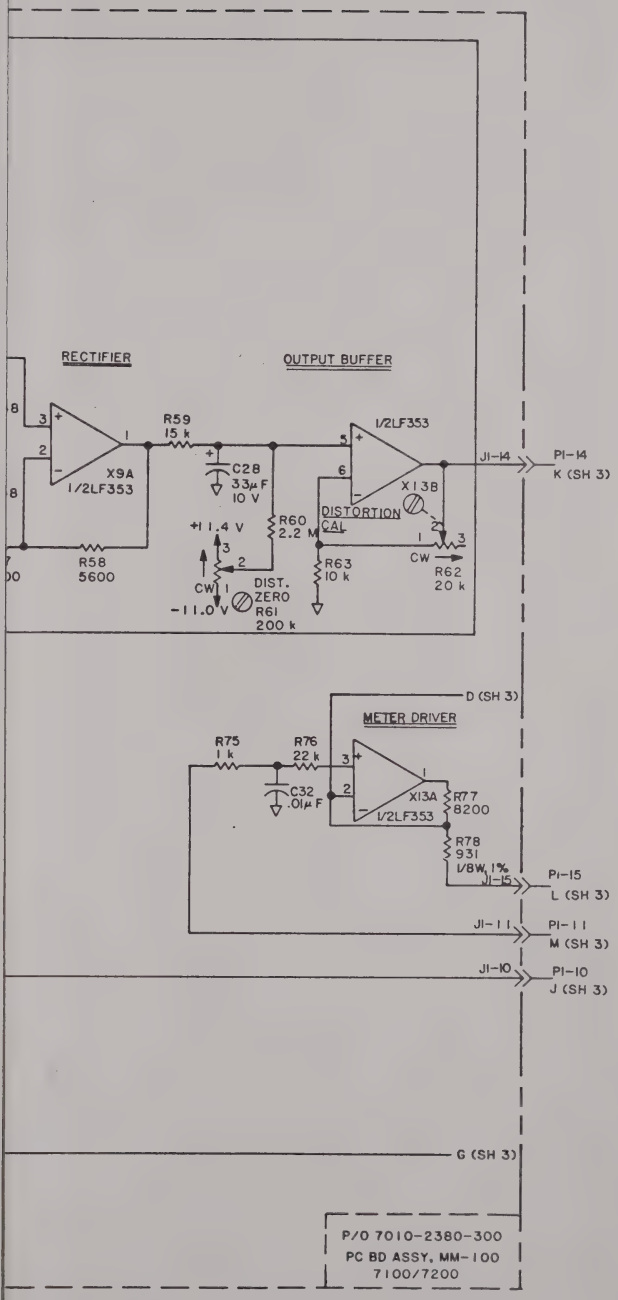

Figure 6-43. MM-100 assembly A2A1, schematic diagram (sheet 2 of 3).

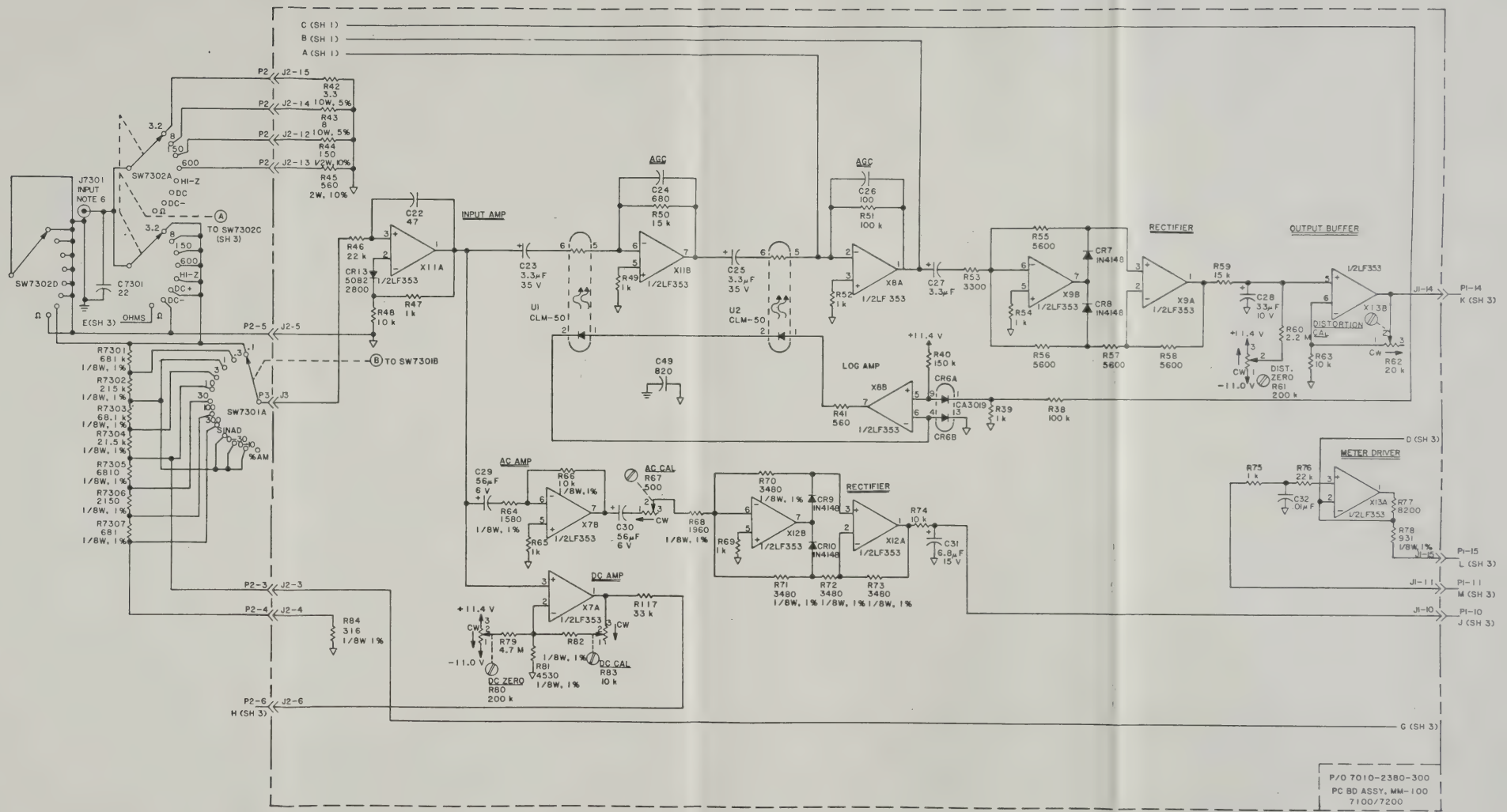

Figure 6-43. MM-100 assembly A2A1, schematic diagram (sheet 2 of 3).

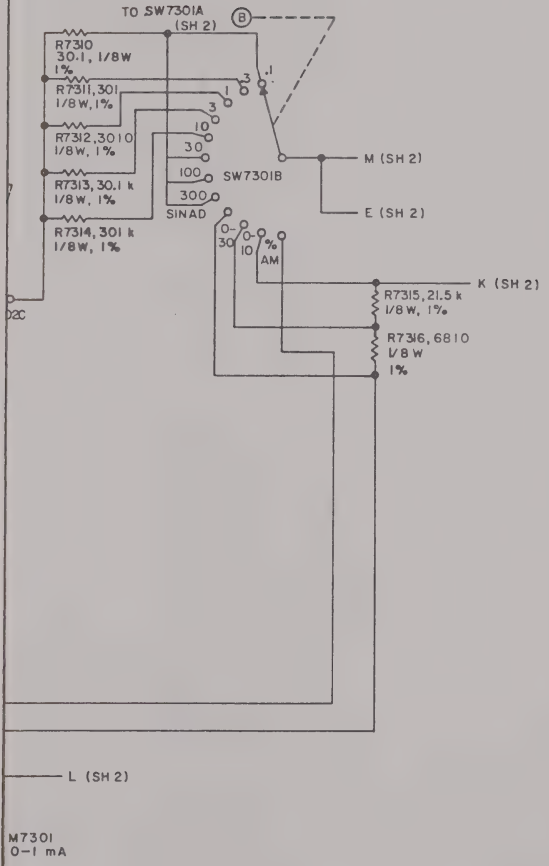

Figure 6-43. MM-100 assembly A2A1, schematic diagram (sheet 3 of 3).

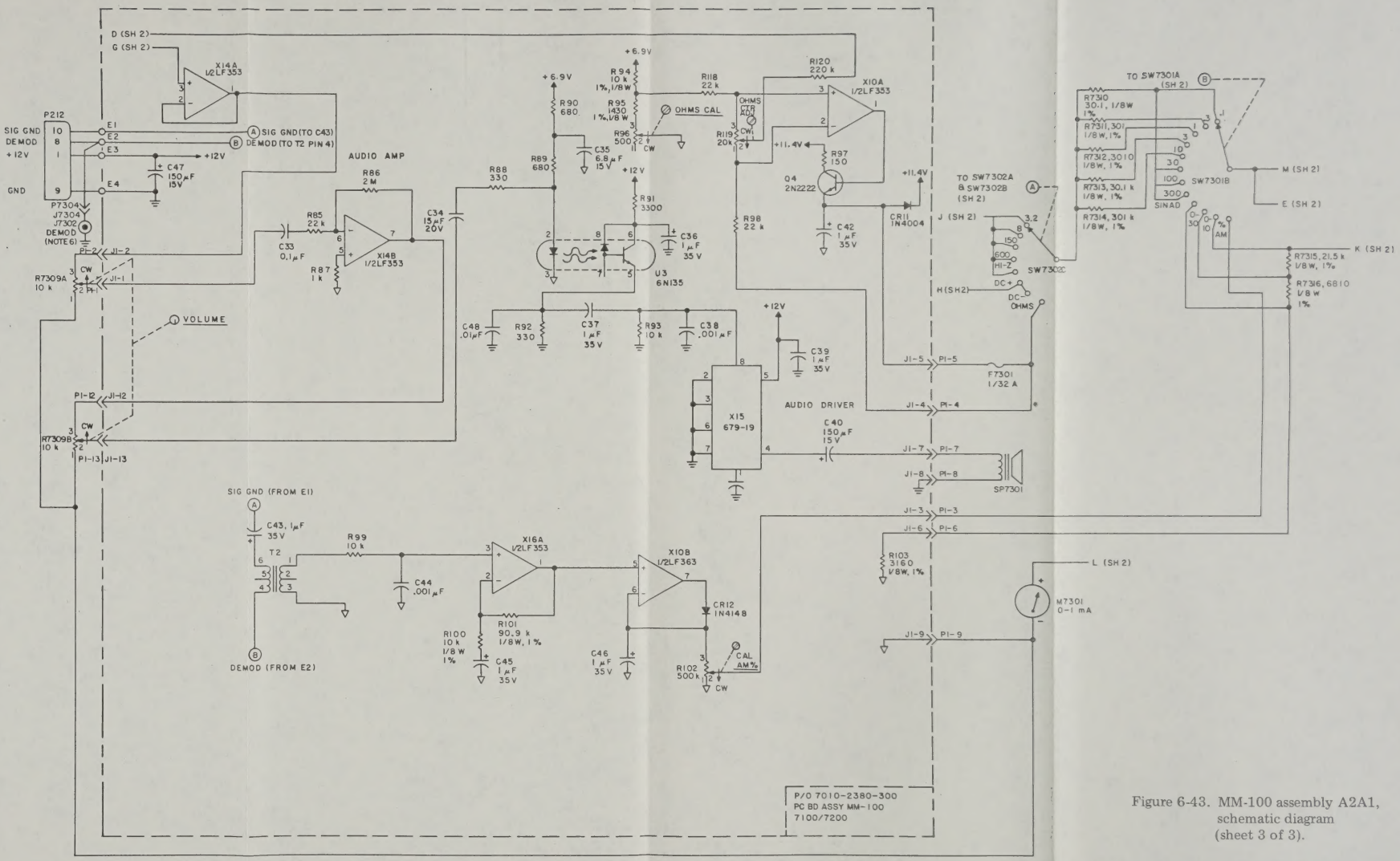

Figure 6-43. MM-100 assembly A2A1, schematic diagram (sheet 3 of 3).

By Order of the Secretary of the Army:

E. C. MEYER
General, United States Army
Chief of Staff

Official:

ROBERT M. JOYCE
Brigadier General, United States Army
The Adjutant General

DISTRIBUTION:

To be distributed in accordance with DA Form 12-51, Operator Maintenance Requirements for AN/VRC-12, AN/VRC- 43 thru 49.

USPS Bound Printed Matter 7 lb

DEPARTMENT OF THE ARMY
US ARMY PUBLICATIONS DISTRIBUTION CENTER
1655 WOODSON ROAD
ST LOUIS, MISSOURI 63114-6181

OFFICIAL BUSINESS
CHANGE SERVICE REQUESTED

U.S. POSTAGE PAID
Standard Mail(B)
ST. LOUIS, MO
PERMIT NO. 3608

CDR TECHNICAL LIB (B883)
MARINE CORPS LOG BASE
P O BOX 110883
BARSTOW, CA 92311-5015

J1152

NOMENCLATURE 355481 TM 11-6625-3016-14			CHG OR DATE
QUANTITY 2	ACTION Reg	UNIT OF ISSUE EA	REQN DATE 01/20/1998
ITEM ID 355481	PIN 0000854013	USAPDC CNTL NO.	

USAPDC-S LABEL ZONE 7

0008485401 3#